Rizzetta & Company

Paseo
Community Development District

Board of Supervisors' Meeting
August 28, 2019

District Office:
9530 Marketplace Road, Suite 206
Fort Myers, Florida 33912
(239) 936-0913

www.paseocdd.org

Professionals in Community Management

PASEO
COMMUNITY DEVELOPMENT DISTRICT

Paseo Village Centre – Theatre, 11611 Paseo Grande Boulevard, Fort Myers, Florida 33912

Board of Supervisors	Manny Samson	Chairman
	Steven Brown	Vice Chairman
	Jim Heether	Assistant Secretary
	Sharon Schulman	Assistant Secretary
	Lyle Hicks	Assistant Secretary
District Manager	Belinda Blandon	Rizzetta & Company, Inc.
District Counsel	Andrew d'Adesky	Latham, Shuker, Eden & Beaudine, LLP
District Engineer	Carl Barraco	Barraco and Associates, Inc.

All cellular phones must be placed on mute while in the meeting room.

The Audience Comment portion of the agenda is where individuals may make comments on matters that concern the District. Individuals are limited to a total of three (3) minutes to make comments during this time.

Pursuant to provisions of the Americans with Disabilities Act, any person requiring special accommodations to participate in this meeting/hearing/workshop is asked to advise the District Office at least forty-eight (48) hours before the meeting/hearing/workshop by contacting the District Manager at (239) 936-0913. If you are hearing or speech impaired, please contact the Florida Relay Service by dialing 7-1-1, or 1-800-955-8771 (TTY)
1-800-955-8770 (Voice), who can aid you in contacting the District Office.

A person who decides to appeal any decision made at the meeting/hearing/workshop with respect to any matter considered at the meeting/hearing/workshop is advised that person will need a record of the proceedings and that accordingly, the person may need to ensure that a verbatim record of the proceedings is made including the testimony and evidence upon which the appeal is to be based.

PASEO COMMUNITY DEVELOPMENT DISTRICT
DISTRICT OFFICE • 9530 MARKETPLACE ROAD • SUITE 206 • FORT MYERS • FL • 33912

www.paseocdd.org

August 26, 2019

Board of Supervisors
Paseo Community
Development District

REVISED AGENDA

Dear Board Members:

The regular meeting of the Board of Supervisors of the Paseo Community Development District will be held on **Wednesday, August 28, 2019 at 5:30 p.m.**, at the Paseo Village Center Theatre, 11611 Paseo Grande Boulevard, Fort Myers, FL 33912. The following is the agenda for this meeting:

1. CALL TO ORDER/ROLL CALL
2. PUBLIC COMMENT
3. DISTRICT ENGINEER STAFF REPORT
A. Consideration of M.R.I. Inspection Proposal for Storm Structure Cleanout..... Tab 1
4. BUSINESS ITEMS
A. Ratification of Action Taken During August 6, 2019 Emergency Meeting
B. Review of August 1, 2019 Field Services Report ..... Tab 2
C. Review and Discussion Regarding LED Roadway Lighting.... Tab 3
D. Consideration of Proposals for Gazebo Railing Replacement ..... Tab 4
E. Consideration of Proposals Guardhouse Door Replacement ..... Tab 5
F. Consideration of Proposals for Landscape Lighting ..... Tab 6
G. Consideration of Rizzetta Technology Services Contract for Professional Technology Services ..... Tab 7
H. Public Hearing Regarding the 2019/2020 Budget
1. Presentation of the Proposed Final Budget for Fiscal Year 2019/2020..... Tab 8
2. Consideration of Resolution 2019-05, Annual Appropriations and Adopting the Budget for Fiscal Year 2019/2020..... Tab 9
3. Consideration of Resolution 2019-06, Imposing Special Assessments and Certifying an Assessment Roll ..... Tab 10
I. Consideration Resolution 2019-07, Adopting a Meeting Schedule for Fiscal Year 2019/2020..... Tab 11
J. Discussion Regarding Condo Association Use of CDD Tracts for Storage Containers
5. BUSINESS ADMINISTRATION
A. Consideration of the Minutes of the Board of Supervisors' Meeting held on July 17, 2019..... Tab 12
B. Consideration of the Minutes of the Emergency Board of Supervisors' Meeting held on August 6, 2019 ..... Tab 13

C. Consideration of the Operations and Maintenance Expenditures for the Months of June and July 2019..... Tab 14

6. STAFF REPORTS

A. District Counsel

B. District Manager

7. SUPERVISOR REQUESTS/PUBLIC COMMENT

8. ADJOURNMENT

We look forward to seeing you at the meeting. In the meantime, if you have any questions, please do not hesitate to call us at (239) 936-0913.

Sincerely,

Belinda Blandon

Belinda Blandon
District Manager

Cc: Jan Albanese Carpenter, Latham Shuker, Eden & Beaudine, LLP

Tab 1

M.R.I. Inspection LLC
17891 Wetstone Rd.
N. Ft. Myers, FL. 33917
239-984-5241 Office
239-707-5034 Mike
239-236-1234 Fax

CGC 1507963

Proposal

Date	Estimate #
7/24/2019	1875

Name

Barraco and Associates, Inc.
2271 McGregor Blvd. Suite 100
Fort Myers, FL 33901

Project

Paseo CDD
Dry Season Cleaning

Description	Cost
This proposal is for the total cost to clean all specified "dry season" storm structures in the Paseo community per provided map. We will utilize divers to dive each specified structure to pump out and remove all sand, sediment and debris present. This price includes all labor, material and equipment needed to complete this job. This quote is strictly for the cleaning and does not include the cost to complete any repairs that may be necessary. Upon inspection of the site, we will provide an additional quote to complete any repair work. This quote is accurate as long as the scope of work on the provided inspection report is as stated. If the scope of work is found to deviate in any way, charges may be added or discounted from quoted price. By signing this proposal you agree to pay any additional charges you may incur.	31,500.00
Total	**$31500.00**

All material is guaranteed to be as specified. All work to be completed in a workmanlike manner according to standard practices. Additional charges may occur if any changes are made during scope of work and will become an extra charge over and above the estimate. All agreements contingent upon strikes, accidents or delays beyond our control. Owner to carry fire, tornado and other necessary insurance . Our wokers are fully covered by workman's Compensation insurance. We will not be responsible for any unforseen incidents, when we dewater any wet well system . Due to sink holes crevases or breeches etc. in and around wet well. This proposal does not include replacing any landscaping(Grass,trees, shrubs.etc.) all Jobsites will be left clean,

Authorized Signature *Mike Radford*

Mike Radford President

This proposal may be withdrawn if not accepted within 30 days.

Arreptaurr of Proposal The Above price, specifications and conditions are satisfactory and are hereby accepted. You are authorized to do the work as specified. Payments will be made within 30 days after invoiced. If not we will agree to pay a 10% late fee.
This proposal may be withdrawn if not accepted within thirty (30) days.

Signature_____

Date of acceptance_____

Tab 2

PASEO

FIELD INSPECTION REPORT

Completed report

August 1, 2019

Rizzetta & Company

Tyree Brown – Field Services Manager

Rizzetta & Company
Professionals in Community Management

SUMMARY & PASEO

General Updates, Recent & Upcoming Maintenance Event

Complete Palm tree pruning in the community.

Work on detail work on Penzance west of community entrance.

Continue Palm pruning throughout the community.

The following are action items for Pinnacle Landscapes to complete. Please refer to the item # in your response listing action already taken or anticipated time of completion. Red text indicates deficient from previous report. **Bold Red text** indicates deficient for more than a month. Green text indicates a proposal has been requested. Blue indicates irrigation.

1. Remove sucker growth from Live Oaks on Palomino near Penzance.

completed

2. Schedule Medjool Palms for pruning at the Penzance/Palomino intersection.

completed for 2 & 3

3. Prune dead and ragged leaves from the Crinum Lily at the Palomino/Penzance intersection both sides. Treat Leaf Hoppers.

4. Weed plant bed at the intersection of Palomino and Penzance and put a hard edge on the bed.

COMPLETED

5. Repair broken irrigation heads and lines at the plant bed on Penzance at Palomino from construction damage. (photo 5) COMPLETED

6. Spray weeds growing on the rocks in the plant beds at the intersection of Palomino and Penzance. (photo 6)

COMPLETED

7. Remove plant debris from the beds on Penzance at Palomino.

COMPLETED

8. Give haircut prune to Pitch Apple at the fountain equipment area on Penzance.

COMPLETED

9. Remove Mexican Petunia growing in the Arboricola in the plant bed at the intersection of Palomino and Penzance.

COMPLETED

PASEO

10. Treat all fire ant mounds throughout the community. ON GOING BASIS THROUGH SUMMER

11. Prune seed pods from Bismarck Palms on both sides of Paseo. COMPLETED

12. Prune Philodendron over the sidewalk of the west side of Paseo. (photo 12) COMPLETED

13. Weed plant bed on the west side of Paseo near Paseo Grande west side. COMPLETED

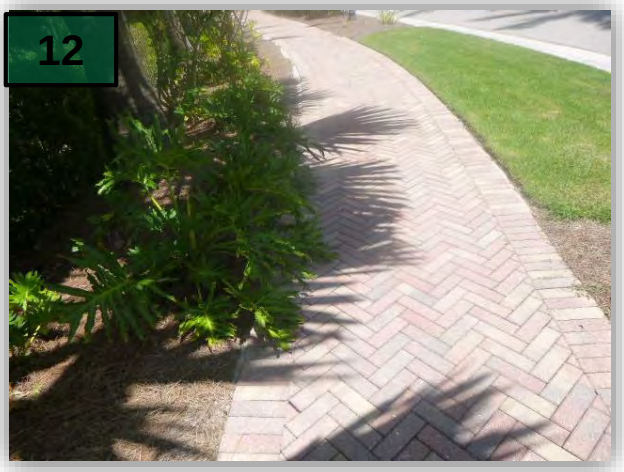

14. Monitor recently rejuvenated Firebush on both sides of Paseo and make sure irrigation is working properly. (photo 14)

15. Weed Firebush plant bed on the west side of Paseo north of Adelio. COMPLETED

16. Weed plant bed on Dario at the intersection with Paseo. COMPLETED

17. Cut back vegetation over the wall of the bridge of Paseo. (photo 17) COMPLETED

18. Give proposal to repair hog damage to turf on the east side of Paseo near Dario.

19. Weed plant beds on the east side of Paseo across from Adelio. COMPLETED

20. Weed plant beds back of sidewalk on the east side of Paseo before the bridge. COMPLETED

21. Investigate uprooted Pine tree at the edge of the conservation area of the east side of Paseo to determine if tree is at risk of falling on or near the sidewalk.

22. Spray weeds around irrigation valve box covers on both sides of Paseo Grande back of sidewalk.(photo 22) COMPLETED

PASEO

23. 589 Live Oaks in the right of ways of the community have recovered to the point where they are ready for structural pruning.

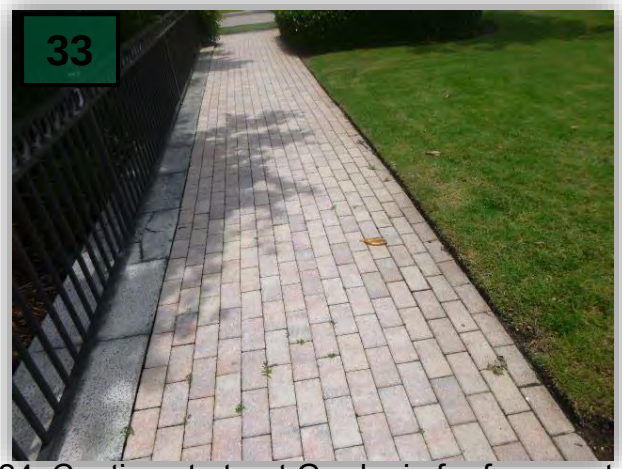

24. Continue to treat Gardenia for fungus at the gazebo on east side of Paseo Grande.

25. Spray weeds in paver sidewalk of Paseo.

COMPLETED

26. Prune Firebush over the sidewalk in front of and around all the gazebos on Paseo Grande.

COMPLETED BOTH 26 & 27

27. Weed plant bed on the east side of Paseo

28. New sod installs at the gazebos on Paseo Grande look good. Continue to treat weeds.

29. New sod being installed in the right of way of Paseo Grande across from Javiera.

30. Prune Firebush growing through the fence at the gazebos on the east side of Paseo Grande. (photo 30) COMPLETED

31. Line trim large stormwater pond bank on all sides of Paseo Grande.(photo 31)

COMPLETED

32. Allow the Arboricola hedge line to grow

taller to allow a 2 tiered look on the stormwater pond bank on the east side of Paseo Grande.

WILL HAVE DONE

33. Spray weeds in the pavers at all the gazebos on Paseo Grande. (photo 33)

COMPLETED

34. Remove volunteer plants in Arboricola

At the east side gazebos on Paseo Grande.

COMPLETED

35. Prune Gardenias over the sidewalk of the entrances to several gazebos on Paseo Grande. (photo 35) COMPLETED

36. Treat ornamental grass for Spider Mites and cut back along fence line of gazebo on the east side of Paseo Grande.

COMPLETED

PASEO

37. Remove broken limb from Maple tree on the stormwater pond bank on the east side of Paseo Grande near Hermenia.(photo 37)

38. Remove sucker growth from Ligustrums at the community entrance inside the gate.
COMPLETED

39. Make sure fruit from Medjool Palms is removed from the paver sidewalks as to not stain them or become a slipping problem.

40. Prune Ixora over the paver sidewalk on the east side of the front entrance of the community

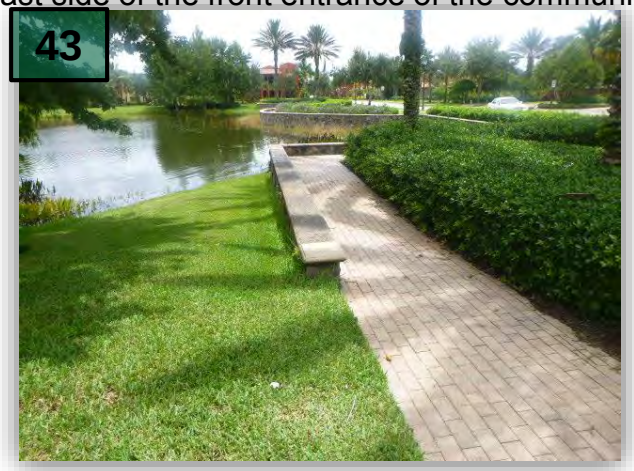

41. Remove fruit pods from all Bismark Palms in Esperanza.
COMPLETED 40 &41

42. Remove fruits from Coconut Palms on the west side of Paseo north end.
ON SCHEDULE END OF SEPTEMBER

43. Line trim around the stormwater pond retaining wall on the west side of Paso Grande. (photo 43)
COMPLETED

44. New sod being installed back of sidewalk on both sides of Paseo Grande. (photo 44)

45. Cut back Green Island Ficus at the gazebo

on the west side of Paseo Grande.
COMPLETED

46. Remove sucker growth on Ligustrums at the intersection of Paseo and Hidalgo.
COMPLETED

47. Prune Coco Plum on the east side of Paseo north end. COMPLETED

48. Treat Torpedo Grass in the Ferns on the Paseo Grande stormwater pond banks. (photo 48)
COMPLETED

49. Prune sucker growth on the Shady Lady's on the east side of Paseo north end.
COMPLETED

50. Weed plant bed at the corner of Paseo and Estaban.
COMPLETED

51. Monitor turf with fungus damage at the Adora

cul de sac.

52. Remove sucker growth on Live Oaks in the

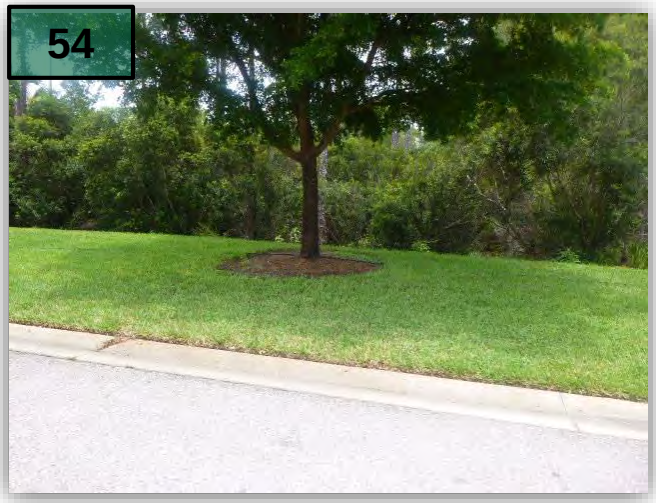

right of way of condo area of the community.

COMPLETED

53. Continue to remove weeds from tree rings in the right of ways of the condo area of the community.

54. Weed Shady Lady tree rings on Dario.(photo 54)

COMPLETED

55. Weed Simpson Stopper bed on the fence line of Nalda.

Text

56. Weed newly installed Pigeon Plum tree rings on Bibiana.

57. Spray weeds in the rocks in the plant beds on Penzance. (photo 57)

58. Treat ornamental grass for spider mites on the Provencia cul de sac.(photo 58)

COMPLETED

59. Treat weeds in the Provencia cul de sac.

60. Prune all Sylvester and Coconut Palms in Esperanza.(photo 60)

ON SCHEDULE END OF SEPTEMBER

61. Pigeon Plum trees in the right of way of the condo area are in need of structural pruning.

62. Prune extremely overgrown shrubs along the fence line of Penzance west end.

ON SCHEDULE FOR NEXT WEEK

63. Weed plant bed on the Paseo cul de sac.

COMPLETED

64. Prune Bougainvillea in the common area on Bibiana across from the Provencia entrance.

COMPLETED

65. Remove declining Live Oak in the right of way of 4404 Tulio, stump grind and sod.

PASEO

66. **Remove fruit pods from all Palm trees along the Penzance frontage.**

ON SCHEDULE WITHIN 2 WEEKS

67. Prune shrubs at the well on Paseo. (photo 67)

COMPLETED

68. Weed plant bed at the end of Hidalgo.

COMPLETED

69. Remove dead leaves and fruit pods from Palms along the fence line of Penzance west end.

ON SCHEDULE WITHIN 2 WEEKS

70. Continue to weed plant bed along the fence line of Penzance west of the community entrance. (photo 70)

COMPLETED

71. Remove fruits from Coconut Palms along the fence line of Penzance west end.

END OF SEPTEMBER 71 & 72

72. Remove fruit pods from all Palm trees on the Penzance frontage. (photo 72)

73. Remove weeds in the Arboricola and Ixoras along the Penzance frontage.

COMPLETED 73 & 74

74. Weed plant bed at the old construction

entrance on Penzance. (photo 74)

75. Repair ruts in the turf on the Penzance frontage east end.

COMPLETED

Tab 3

August 07, 2019

From: Supervisor Steven Brown, Vice-Chairman, Paseo CDD

To: Belinda Blandon, District Manager
Andrew d'Adesky, District Council

Subj: Paseo LED Streetlight Retrofit

References:

(a) Telcon between Supervisor Brown and Nicole Monihan, City Engineer, City of Fort Myers on July 31, 2019.
(b) City of Fort Myers Design Standards, August 2014
(c) City of Fort Myers Standard Details & Specifications for Arterial/Collector Road Street Lighting, Drawing L-3A, November 29, 2007
(d) State of Florida Manual of Uniform Minimum Standards for Design, Construction and Maintenance for Streets and Highways, 2005
(e) American Association of State Highway and Transportation Officials (AASHTO) Roadway Lighting Design Guide GL-6, 2005
(f) Federal Highway Administration (FHWA) Lighting Handbook, August 2012
(g) Paseo Engineering Drawing for Street Lighting, SC10567-3, May 11, 2012
(h) LED Lighting Distribution Quick Referenced Guide
(i) OEO Energy Solutions Spec Sheet for LED Retrofit Kit GI-5RFK-45-HV-40
(j) Chat discussion with Greg from OEO regarding the Light Distribution pattern of the OEO retrofit kit
(k) OEO Energy Solutions installation instructions

1. **Summary**. The Paseo Community Development District (CDD) issued a Request for Proposal (RFP) for the replacement of all Metal Halide Street Light lamps with the equivalent LED optic. After receiving five (5) responses the contract for replacement of the lamps was awarded to Suntech despite their chosen optic, provided by OEO Energy Solutions, not meeting the majority of the RFP specifications. Upon completion of the project deficiencies were observed and a study was initiated on both the optic specifications and the installation methodology. This study, outlined in sections 3 and 4 below, included an extensive review of all applicable street light standards and regulations as well as conversations with the City of Fort Myers City Engineer and an OEO Energy Solutions representative. After careful consideration of all material and information provided it has been determined that the installed product does not meet the minimum standards established by the City of Fort Myers for residential street lighting and, therefore, must be removed and replaced.

2. **Background**.
    a. On June 27 2018 the Paseo CDD issued the LED Lighting Retrofit Project RFP which required all vendors meet or exceed 26 separate LED Street Lighting specifications.

All specifications were designed based on best practices and standards established by Local, State, National and Federal guidelines (Refs (b), (c), (d), (e) and (f)) and the original Paseo installation requirements (Ref (g)).

b. At the September 26, 2018 meeting of the Paseo CDD Board of Supervisors the proposal submitted by Suntech using OEO Energy Solution products was selected as the winning bidder by a 4-1 vote, this despite the Suntech proposal failing to meet 16 of the 27 RFP requirements and being ranked 4th out of 5 bidders.

c. After completion of the installation the undersigned requested that a review of the installation be done by a qualified professional in order to verify that the Light Distribution pattern for the OEO product line was the correct type for the streets of Paseo and that the installation was done in accordance with manufacturer instructions (Ref (h)) and/or applicable standards (Refs (a – g, inclusive)).

d. District Manager contracted with Jewitt Engineering to perform an inspection of the LED retrofit. Although a review of the installation was done by Jewitt Engineering the response provided focused solely on the RFP specifications and did not address the two factors identified in Para 2.c and, as such, further research was necessary to ensure compliance with Local, State, National and Federal requirements. This research is outlined in Sections 3 & 4 and summarized in Section 5.

3. **Review of Light Distribution Pattern requirements**.

In conducting a review of the light distribution pattern, the following Local, State, National and Federal installation and implementation requirements were identified:

a. **City of Fort Myers standards**:

i. Per telephone conversation with Nicole Monihan, City Engineer for the City of Fort Myers (Ref (a)), the city's requirements are that *"All work associated with the installation of roadway lighting must conform to current City of Fort Myers Standards, Florida Department of Transportation (FDOT) Design Standards, Federal Highway Administration Lighting Standards and the AASHTO Roadway Lighting Design Guide."* (Refs, (b), (c), (d), (e) and (f))

ii. City Engineer Monihan further stated that we were required to replace the original lamp with a lamp that offers the same type of light distribution as the original. Ref (g) identifies that the Light Distribution Type originally installed in Paseo is Type III.

iii. Engineer Monihan further stated that if the installed lamp was not certified Type III we would be required to remove it and replace it with a lamp that was certified Type III.

iv. Ref (b), Section 13710, adds additional requirements as follows *"All materials furnished under this section shall conform to the current standards of the National Electrical Manufacturers Association (NEMA), the Underwriters Laboratories, Inc. (UL), the Electrical Testing Laboratories (ETL), and the National Electrical Testing Association (NETA)."*

v. Ref (c), Line 4 states (emphasis added) *"OPTICS: System composed of a chemically brightened, multi-faceted, anodized aluminum assembly mounted onto a white frame* ***giving a Type 3 (asymmetrical) distribution****"*

b. **State of Florida Requirements**: Ref (d), Chapter 6, Section D, "*Level of Illumination"* states *"…the level of illumination for streets and highways not be less than:*
   i. *Levels consistent with need and resources.*
   ii. ***Guidelines established by AASHTO in Ref (a)***" (emphasis added. NOTE: In this instance Ref (a) refers to our Ref (e))

c. **National Requirements**: Ref (e) delineates Light Distribution patterns as follows (emphasis added):

"*There are five different lateral distribution patterns to choose from when designing a lighting layout. They consist of Types I, II, III, IV and V.*

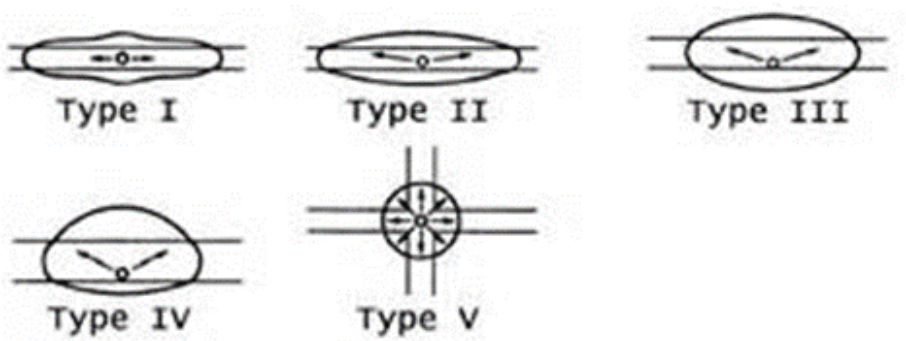

- *Type I is considered a full cutoff fixture. It is the most restrictive pattern of lighting. It concentrates the majority of the light on the roadway. There is minimal spill over light to the house side of the luminaire. This pattern of lighting is ideal for roadways within residential areas with narrow roads.*
- *Type II is considered a cutoff fixture. It is a restrictive pattern of lighting. It is slightly less restrictive than Type I. It also concentrates the majority of*

the light on the roadway. There is minimal spill over light to the house side of the luminaire. This pattern of lighting is ideal for roadways within residential areas with narrow roads

- *Type III is considered a semi-cutoff fixture. It is a less restrictive pattern of lighting than Type II. However, Type III provides light for a wider section of roadway.* ***This pattern of lighting is ideal for roadways within residential areas****.*
- *Type IV is considered a semi-cutoff fixture. It is a less restrictive pattern of lighting than Type III. However, Type IV provides light for a wider section of roadway and is normally used in wide, multi-lane roads*
- *Type V is considered a non-cutoff fixture. It has a high mast lighting pattern. The light is equally distributed in a circle surrounding the luminaries.* ***This pattern of lighting is not suitable for residential areas****.*"

d. Ref (h) further describes Light Distribution patterns as follows (emphasis added):

- *Type I is a two-way lateral distribution having a preferred lateral width of 15 degrees in the cone of maximum candlepower. The two principal light concentrations are in opposite directions along a roadway. This type is generally applicable to a luminaire location near the center of a roadway where the mounting height is approximately equal to the roadway width.*
- *Type II light distributions have a preferred lateral width of 25 degrees. They are generally applicable to luminaires located at or near the side of relatively narrow roadways, where the width of the roadway does not exceed 1.75 times the designed mounting height.*
- *Type III light distributions have a preferred lateral width of 40 degrees. This distribution is intended for luminaires mounted at or near the side of medium width roadways or areas, where the width of the roadway or area does not exceed 2.75 times the mounting height.*
- *Type IV light distributions have a preferred lateral width of 60 degrees. This distribution is intended for side-of-road mounting and is generally used on wide roadways where the roadway width does not exceed 3.7 times the mounting height.*
- *Type V produces a circular distribution that has the same intensity at all angles. This distribution has a circular symmetry of candlepower that is essentially the same at all lateral angles. It is intended for luminaire mounting at or near center of roadways, center islands of parkway, and intersections. It is also meant for large, commercial parking lot lighting as well as areas where sufficient, evenly distributed light is necessary*

e. **OEO Manufacture Statements**: Ref (i) does not list any Light Distribution pattern for the LED Retrofit Kit GI-5RFK-45-HV-40 and only states that the kit has a 120° distribution angle. Furthermore, in an online chat conversation with Technical Support at OEO, (Ref (j)), the OEO representative stated that there is "*No special*

optics or distribution pattern on the Green Kits…" and that the customer should "*…Rely on the fixture lenses for optic purposes*.". Furthermore, when the Paseo decorative pole-top luminaire was described to the OEO online representative he stated that the retrofit kit was not a suitable replacement.

4. **Review of lamp / optic installation requirements**.

    a. Refs (d), (e) and (f) indicate that the lamps on decorative pole-top mounts such as those used within Paseo should be mounted parallel to the roadway so as to eliminate glare aggregation, an issue which constitutes a hazard to drivers and leads to unsafe and hazardous driving conditions.
    b. Ref (k) recommends a flat (parallel to roadway) installation. Contractor states he was instructed by a CDD Supervisor to install at an unapproved and unacceptable angle.

5. **Conclusion**.
    a. Based on all references and the telephone discussion with the City of Fort Myers City Engineer, the optics provided by OEO Energy Solutions do not meet the minimum standards established by the City of Fort Myers, the State of Florida, the AASHTO Lighting Design Guide and the FHWA Lighting Handbook. Specifically, the OEO Energy Solutions Optics fails to:
        i. Meet any of the Local, State, National or Federal standards required by the City of Fort Myers
        ii. Have a Light Distribution Pattern and specifically a Type III rating as required by the City of Fort Myers for residential streets
        iii. Have the same Type distribution pattern (Type III) of our previous lamps as required by the City of Fort Myers
        iv. Have a UL rating as required by the City of Fort Myers

    These failures alone require that the optics be removed and replaced with an optic that meets or exceeds all standards.

    b. The decorative post-top luminaires used within Paseo have no fixture lenses and, therefore, there is no possibility of configuring the retrofit kit to the correct light distribution pattern as required by Local, State, National and Federal standards and regulations. This failure makes the OEO optics improper for the Paseo installation and, therefore, they must be removed and replaced with an optic that does meet or exceed these standards.

    c. The method of installation fails to meet Local, State, National, Federal and manufacturer installation requirements. In order to conform with these standards, the optic must be returned to a 0^0, parallel to the roadway, installation. However, as the optic does not have a qualified BUG rating it will then violate the

BUG rating required in the RFP and backlight will become a both a quality of life and safety issue.

d. After careful consideration of all requirements and standards it is my opinion that the Paseo CDD has no option but to remove and replace the OEO Energy Solution Optics. As the fixture was represented to meet or exceed our RFP requirements, including being suitable for our decorative pole-top installation with a TYPE III distribution pattern we should seek full reimbursement from the contractor and/or manufacturer for the cost of this product.

Regards,

Steven A. Brown-Cestero
Vice-Chair
Paseo Community Development District

Tab 4

COLLIER FENCE

1981 Elsa St.
Naples, FL 34109

Office 239-597-8161
Fax 239-597-8205
collierfence@embarqmail.com
www.collierfence.com

Estimate

Date	Estimate #
7/12/2019	27392

Name / Address	Job Address
Paseo 11611 Paseo Grande Blvd Naples, FL 34110	11611 Paseo Grande Blvd Naples, FL 34110

CONTACT PERSON	CELL #	OFFICE #	FAX #
Belinda Blandon	239-989-0303		

Description	Total
Remove and haul 720 LF of 3' tall old aluminum fence around all 4 gazebos.	36,332.00
Install 360 LF of 3' tall 3-channel Ascot aluminum fence with rings, 3' X 6' panels, municipal grade, for all 4 gazebo arches, all posts with floor flanges. Install 360 LF of 3' tall 3-channel Ascot aluminum fence with rings, 3' X 8' panels, municipal grade, for all straight line sides on all 4 gazebos, all posts with floor flanges, all aluminum color Florida Bronze. $9,083.00 per area.	
Collier County commercial fence permit.	500.00

Homeowner is responsible for locating property lines and private utilities.

Total $36,832.00

Price protected for 7 days. Buyer agrees to pay seller in full upon completion of job.
Collier Fence & Wire, Inc. will not be responsible for any damage to private utilities to include: gas, water, electric, low voltage wiring, irrigation.
Vegetation removal by owners.
Prices based on fence line being clear and accessible.

Please note: There will be a 3% service fee charge when making a payment using a debit or credit card.

Deposits are nonrefundable after orders have been placed for material.

Tom Baily
Collier Fence & Wire, Inc.

Please sign & remit deposit of 50%
Balance due upon completion
Buyer_____

SUPERIOR FENCE&RAIL, INC.
WHERE QUALITY MATTERS

ESTIMATE

Rev Date: 07/31/19

Superior Fence & Rail
2925 Warehouse Road
Fort Myers, FL 33916
Phone: (239)-309-7497
Gary.locke@superiorfenceandrail.com

To: **Michael Lake**
Paseo CDD
11611 Paseo Grande Boulevard
Fort Myers, FL 33912

Project:	Bid Items:
Paseo Gazebo Fencing	Ornamental Aluminum Fencing

Material	Specifications	Total
Superior Lifetime Aluminum Fence	**Material:** Type: 36" H 3 Rail Bronze Aluminum Fence with Rings. Posts: 2" x 2" Rails: 1" x 2" Pickets: ¾" Linear Feet: 680 Color: Bronze Gates: 0 10' Panels **Installation** Fence posts to be tapconned to deck with welded bracket.	**$38,715**
Permit Fee	Obtain Basic Permitting for Commercial Fence installation.	**$350**
Total:		

SUPERIOR FENCE&RAIL, INC.
WHERE QUALITY MATTERS

Quotation prepared by: Gary Locke

This is a quotation on the goods named, subject to the conditions noted below:

PAYMENT TERMS:
50% Deposit at Contract
Balance due upon completion

RESPONSIBILITIES OF SUPERIOR FENCE & RAIL:
To perform those items listed in the aforementioned scope of work

RESPONSIBILITIES OF GC OR OWNER:
Work area to be made accessible for fence crews, equipment and material suppliers prior to mobilization and maintained throughout the project
Superior Fence & Rail not responsible for damage incurred to site due to accessing the job
Work area to be cleared, graded and staked prior to mobilization and maintained throughout the project
Provide a lay down area (if needed) for material stockpiled/stored on project
SUPERIOR FENCE & RAIL not responsible for damaged, missing or stolen material stockpiled/stored on project
Provide dumpsters as needed for removed, non-salvageable or refuse material
Haul away and dispose of removed, non-salvageable or refuse material

THIS PROPOSAL IS BASED ON THE FOLLOWING CONDITIONS:
All fence work to be performed under one mobilization with access to all sites without delay. Additional mobilizations will be billed at $500.00 US/occurrence if caused by Contractor/Owner
Job is done in sequence without interruption, normal working hour and days, with one crew
All change orders will reflect all scope of work and conditions of this proposal.
SUPERIOR FENCE & RAIL is not a design/engineering firm. All installations are designed and approved by Owner
SUPERIOR FENCE & RAIL will contact underground utility notification. It shall be the responsibility of the client or contractor for all protection, relocation, or damage to any utilities.
All material and quality control testing by others
SUPERIOR FENCE & RAIL shall be paid for all equipment and labor employed on this project for any delays for which we are not responsible

SCHEDULE - Work will progress in a mutually agreed sequence beginning no sooner than two weeks from receipt of a fully executed subcontract agreement signed by both parties; and approval in writing, by the owner or his representative of all required SUPERIOR FENCE & RAIL submittals

CONDITIONS OF CONTRACT:
Changed Conditions - Our proposal is based on information provided by Contractor and/or Owner. Should actual conditions vary from those represented we reserve the right to claim for additional compensation and/or extension of time.
All additional work will be done after a CHANGE ORDER agreement has been reached and executed between the Owner/Contractor and SUPERIOR FENCE & RAIL.
Unless agreed to in writing we object to any terms and conditions relating to: LIQUIDATED DAMAGES, WARRANTIES, and LIMITATIONS OF LIABILITY, INDEMNIFICATION and SEIZURE OF EQUIPMENT.
No retainage is to be withheld from SUPERIOR FENCE & RAIL's payments.
Invoice balance is due and payable upon completion.
Any claims against the Owner or Owners Agent, shall be pursued by the Contractor on our behalf.
Any claim, dispute or other matter in question between the Contractor/Owner and SUPERIOR FENCE & RAIL relating to or arising out of this Agreement shall be governed by the laws of the State of Florida.
This proposal must be made part of any subsequent contract with which we would agree.

To accept this quotation, sign here and return: _____ Date: _____

THANK YOU FOR YOUR BUSINESS!

2925 Warehouse Road • Fort Myers, FL 33916 • Office: (239) 309-7497
www.superiorfenceandrail.com

TROPICAL FENCE CO.
4822 PALM BEACH BLVD
FORT MYERS, FLORIDA 33905
239-694-5622
http://www.tropicalfence.com
info@tropicalfence.com
C.G.C. #053550

07/31/2019

PROPOSAL/CONTRACT

Customer Information:

PASEO COMMUNITY DEVELOPEMENT DISTRICT
BELINDA BLANDON
11611 PASEO GRANDE BLVD
FORT MYERS, FL 33912

Job Information:

SAME

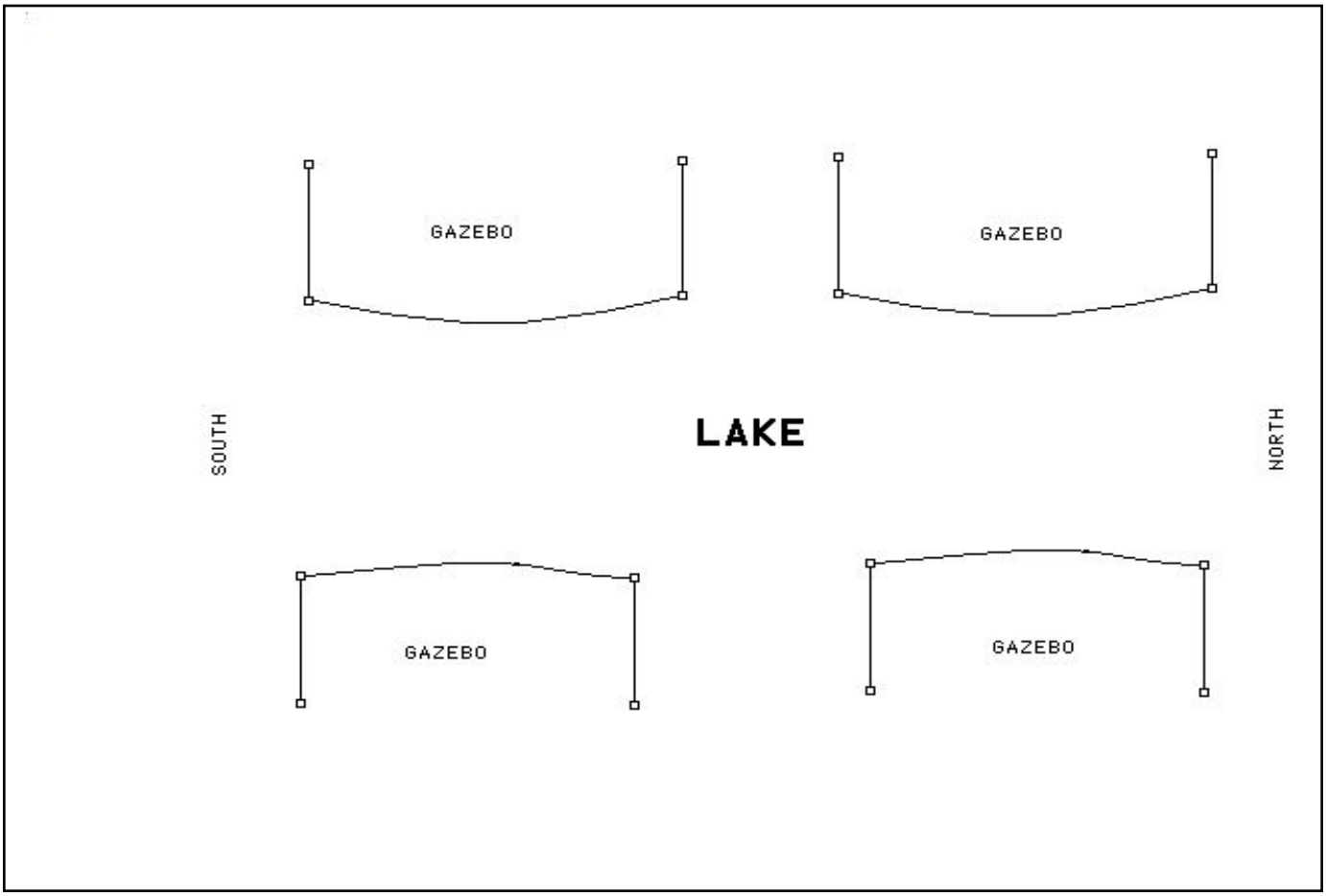

TERRAIN:

- ☐ LEVEL
- ☐ HILLY
- ☐ POOL FENCE
- ☐ ASPHALT
- ☐ CORE DRILL
- ☐ FOUND PINS
- ☐ _____

OBSTRUCTIONS:

- ☐ OLD FENCE
- ☐ TREES
- ☐ BUSHES
- ☐ SPRINKLER LINES
- ☐ ROCK

Approved & Accepted for Customer:

_____ _____
Customer Signature Date

TROPICAL FENCE CO.:

_____ _____
Print Name Date

TROPICAL FENCE CO.
4822 PALM BEACH BLVD
FORT MYERS, FLORIDA 33905
239-694-5622
http://www.tropicalfence.com
info@tropicalfence.com
C.G.C. #053550

07/31/2019

PROPOSAL/CONTRACT

Customer Information:

PASEO COMMUNITY DEVELOPEMENT DISTRICT
BELINDA BLANDON
11611 PASEO GRANDE BLVD
FORT MYERS, FL 33912

Job Information:

SAME

Notes:
Phone # 239-936-0913
- QUOTATION MK-2378-M -

-CABLE LOCATES REQUIRED
-PERMIT FEE INCLUDED
-50% DEPOSIT AT CONTRACT AND BALANCE PAID UPON COMPLETION
-POSTS TO BE PLATE MOUNT/ANCHORED TO LAKE WALL CAP
-INCLUDES REMOVAL/DISPOSAL OF EXISTING 732/LF OF WALL MOUNT ALUMINUM FENCE

FURNISH/INSTALL APPROX. 732/LF OF 36" HIGH (3) RAIL BRONZE COMMERCIAL GRADE #300/LONG ISLANDER STYLE ORNAMENTAL ALUMINUM FENCE WITH TOP RINGS.

36" high / 72" wide LONG ISLANDER COM MOD BRONZE 3 RAIL IDEAL SECTION TOP RINGS
2" Sq. X 58" (36" high) MOD BRONZE .062 3 RAIL END POST
2" Sq. X 58" (36" high) MOD BRONZE .062 3 RAIL LINE POST
2" Sq. X 58" (36" high) MOD BRONZE .062 3 RAIL CORNER POST

TERMS & CONDITIONS

UNTIL FURTHER NOTICE CHAIN LINK ESTIMATES AND ALUMINUM FENCE ESTIMATES ARE GOOD FOR 1 WEEK DUE TO THE LEVYING TARIFFS ON ALUMINUM AND STEEL IMPORTS FINAL PAYMENT OF THE CONTRACTED FENCE CANNOT BE WITHHELD UNTIL FINAL INSPECTION AS THIS RELATIONSHIP IS BETWEEN THE PERMIT AGENCY AND TROPICAL FENCE TROPICAL FENCE CO. agrees to guarantee above fence to be free from defects in materials and workmanship for one year. THE CUSTOMER OR PROPERTY OWNER IS RESPONSIBLE FOR THE LOCATION OF THE FENCE AND THE LOCATION OF THE PROPERTY LINES TROPICAL FENCE CO. will assist the customer, upon request, in determining where the fence is to be erected, but under NO circumstance does TROPICAL FENCE CO. assume any responsibility concerning property lines or in any way guarantee their accuracy. The customer holds the seller harmless from any liability caused by an error in the location of the installed fence. If property pins cannot be located it is recommended that the customer have the property surveyed. TROPICAL FENCE CO. will assume the responsibility for having underground public utilities located and marked. These are the lines the utility companies install within the easment areas on the property and do not include sprinkler lines,well lines,pool equipment lines,electric lines that the customer or previous homeowner may have had installed. TROPICAL FENCE CO. assumes no responsibility for unmarked sprinkler lines,

Approved & Accepted for Customer:

Contract Amount:	**$**	**29440.00**
Down Payment:	**$**	**14720.00**
Balance Due:	**$**	**14720.00**

Customer Signature _____ Date _____

TROPICAL FENCE CO.:

Print Name _____ Date _____

TROPICAL FENCE CO.
4822 PALM BEACH BLVD
FORT MYERS, FLORIDA 33905
239-694-5622
http://www.tropicalfence.com
info@tropicalfence.com
C.G.C. #053550

07/31/2019

PROPOSAL/CONTRACT

Customer Information:

PASEO COMMUNITY DEVELOPEMENT DISTRICT
BELINDA BLANDON
11611 PASEO GRANDE BLVD
FORT MYERS, FL 33912

Job Information:

SAME

TERMS & CONDITIONS

- or any other privately unmarked buried lines or objects. The customer will assume all liability for any damage caused by directing TROPICAL FENCE CO to dig in the immediate vicinity of known utilities. Customer shall inform seller in writing and by physically marking all underground obstructions whether natural or manmade but would still be responsible for damages to utilities if they instruct TROPICAL FENCE TO DIG WITHIN THE KNOWN UTILITIY AREAS. Unless specified, this quotation does not include grading or jackhammer or clearing of vegetation which are the responsibility of the customer.The CONTRACT TOTAL is based upon only those underground obstructions which the customer has informed the seller in writing or by physically marking such as rock. The seller shall have the option to terminate this contract and be paid by the the customer for the installation of the fence up to the point of termination or to continue the work after renegotiation of the contract total with the customer.Loss time due to rock or other underground obstructions will be charged at a rate of $125.00 per hour as determined. Seller is not responsible for loss due to wind, rain, flood or other natural causes.

Partial billing for materials delivered to the job site and work completed may be sent at weekly intervals as agreed upon. Customer is liable for all damages to materials delivered to the job site whether incorporated in the fence or not unless the loss or damage is caused by the seller's negligence. Additional charges for any extra work not covered in this contract that was requested by the customer will also be added. The full amount of this contract along with any additional charges will become payable upon completion of all work. All materials will remain the property of TROPICAL FENCE CO. until all invoices pertaining to this job are paid in full. The customer agrees to pay all cost of collection including reasonable attorney's fee in the event the payment of Balance Due or Completion is not timely paid.

CUSTOMER Initial _____

Initial _____

iDeal aluminum

fence gates railing

ABOVE & BEYOND

ideal-ap.com

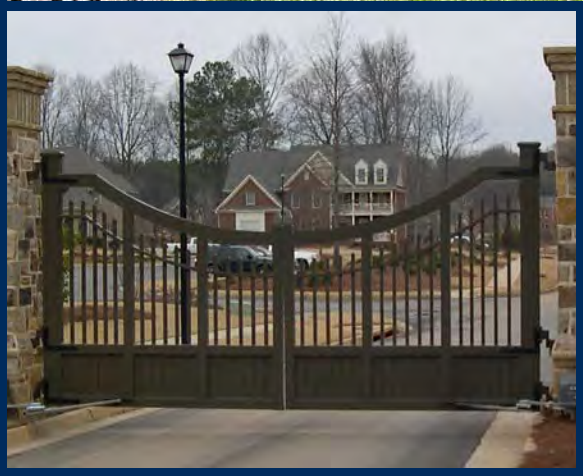

FENCE

Ideal offers four series of aluminum fence to meet your needs. Additional picket spacing and rail height options are available. All fence options provide heightened security, protect loved ones, and increase property value. Ideal's elegant ornamental aluminum fencing, with Idealcoat powder coated finish, provides a maintenance-free fence that will last for years. All of our styles are sleekly designed, with clean lines, and add a unique finishing touch to any outdoor space. Also, our Parkway Series, with 1" rectangular pickets, is a cost effective way to add a premium look to your residential fence.

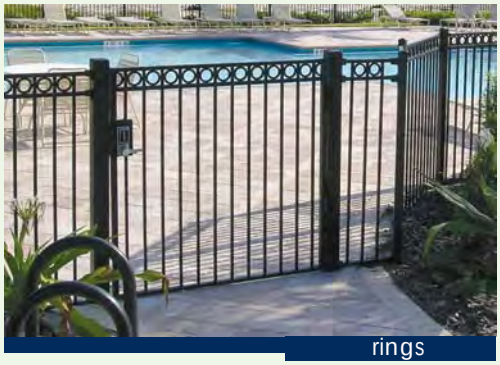
rings

puppy picket

double picket

Fence Styles

200 - californian

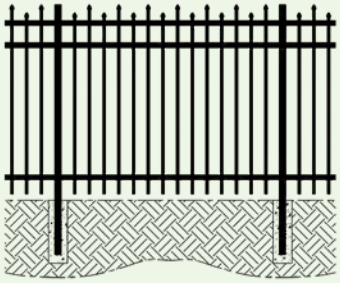

203 - maine

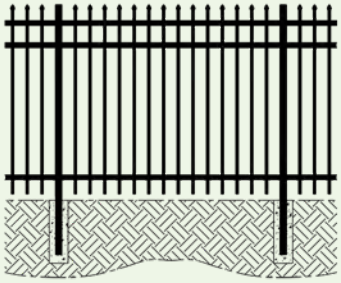

300 - long islander

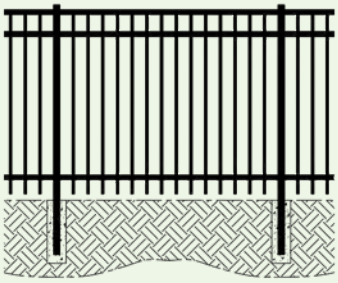

303 - floridian

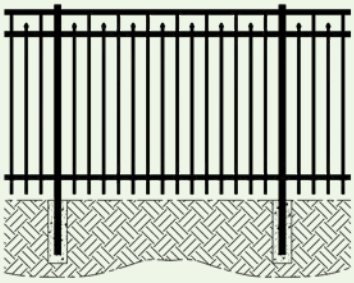

400 - alamo

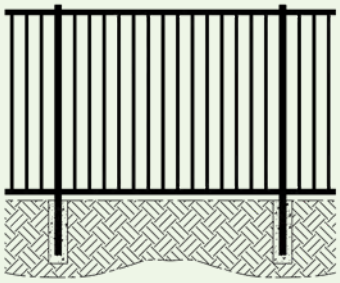

403 - carolina

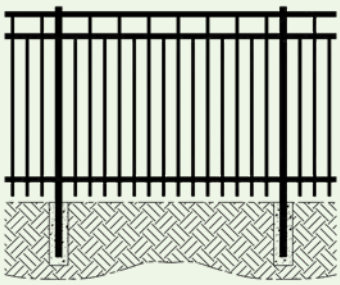

800 - new englander

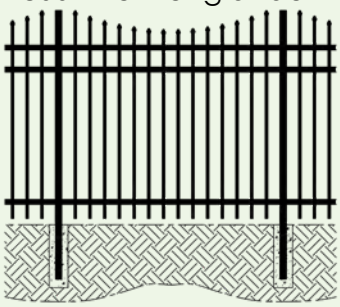

900 - new yorker

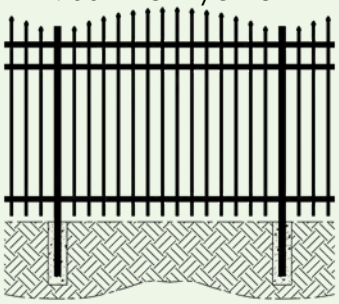

501 - astor

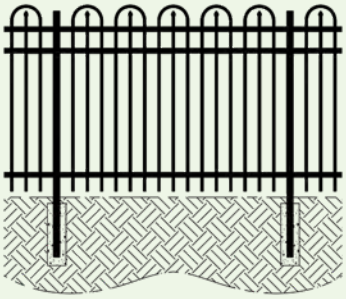

502 - vanderbuilt

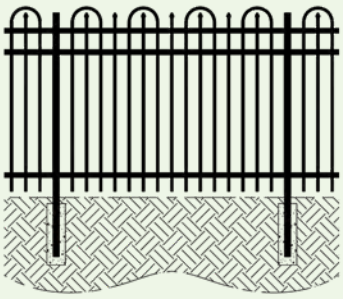

600 - finials

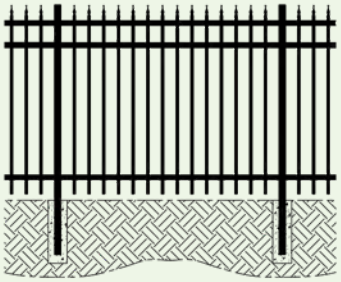

finial options

imperial

majestic

fleur de lis

Fence Specs	Residential	Parkway	Commercial	Industrial
Picket	5/8" sq.	1" x 5/8"	3/4" sq.	1" sq.
Rail	1-1/16" x 1"	1-1/16" x 1"	1-1/16" x 1-1/2"	1-5/8" x 1-5/8"
Fence Post	2" sq. x .062	2" sq. x .062	2"x.062 or 2-1/2"x.075	2-1/2" sq. x .075
Gate Post	2" sq. x .125	2" sq. x .125	2" sq., 2-1/2"sq.	3" sq. x .125

Above and Beyond

- Security
- Strength
- Durability
- Aesthetics
- Innovation
- Versatility

200 - californian

203 - maine

300 - long islander

303 - floridian

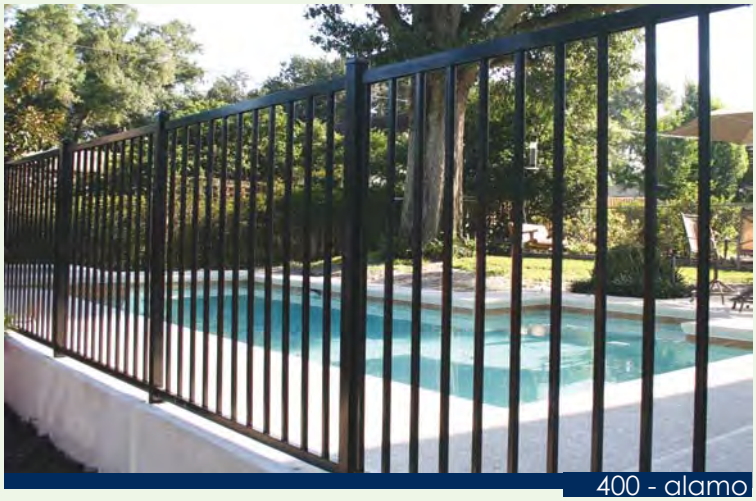

400 - alamo

403 - carolina

600 - finials

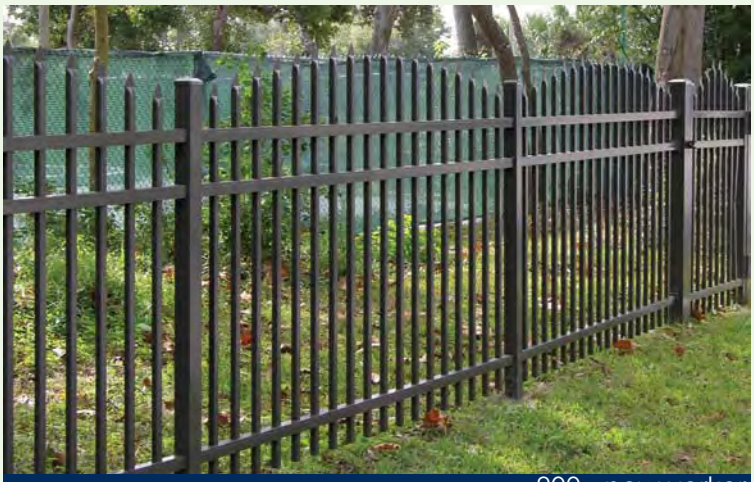

900 - new yorker

GATES

Ideal is the clearly recognized industry leader in both innovation and craftsmanship for all styles of gates. This matters because almost all interaction a customer has with barriers is at the gate. Aesthetics, workmanship, stability and durability are essential for the lifetime of any gate. Ideal provides estate gates in a variety of heights and widths. Customers may choose from single swing, double swing, V-track slide, and Ideal cantilever gates. Each estate gate is custom designed and engineered. Our Ideal gates are fully welded with heavy framework to prevent deflection and sagging.

Ideal's full service CADD department can custom-design your Ideal gate, explain the engineering process, and prepare and review submittals. Ideal leads the fencing and gate industry in creativity, design and strength and our quality is proven with every gate we manufacture.

standard walk gate

custom bottom track cantilever gate

standard estate gate

double picket estate gate

custom estate gate

box frame gate

bottom track cantilever gate

industrial walk gates

bottom track cantilever gate

Ideal is the industry leader in aluminum gates.

Estate Gates
Custom Gates

Bottom Track Cantilever
Top Track Cantilever

Dual Track Cantilevers
V-Track Cantilevers

Louver Gates
Privacy Gates

Chainlink & PVC Frame Gates
Industrial Box Frame Cantilevers

privacy panel gate

bottom track cantilever gate

RAILING

Ideal offers a premium custom line of residential, commercial and industrial aluminum railing that is built to the highest quality standard. Our welded railing is engineered to meet or exceed commercial static loads and stringent building codes. All Ideal railing is manufactured with our certified powder-coated finish that meets or exceeds AAMA 2604 Salt Spray Resistance and AAMA 2604 South Florida Outdoor Exposure standards. Our experienced sales staff and CADD department will guide you in every step to assure that your railing is compliant with codes and standards, and that it will maintain the beauty of powder-coated aluminum.

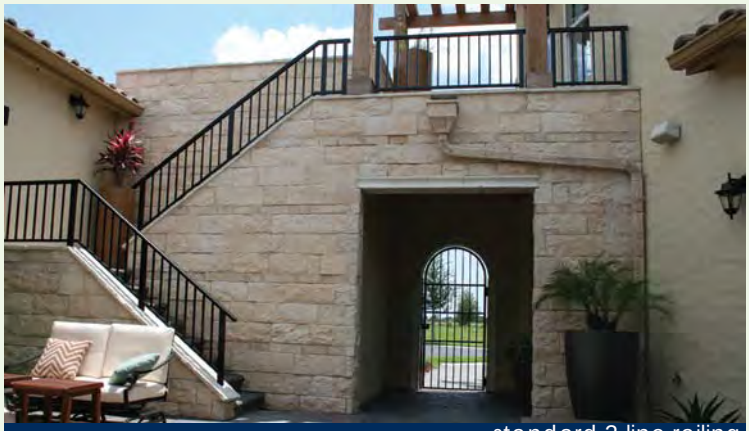

standard 2-line railing

standard 2-line railing

chippendale railing

Let Ideal provide the solution for all your aluminum railing needs.

Stair rail
Balcony

High-Rise
Condominium

Department of Transportation
Water treatment facilities

Bridges
Parks / Trails

Marinas / Seawalls
Retaining walls

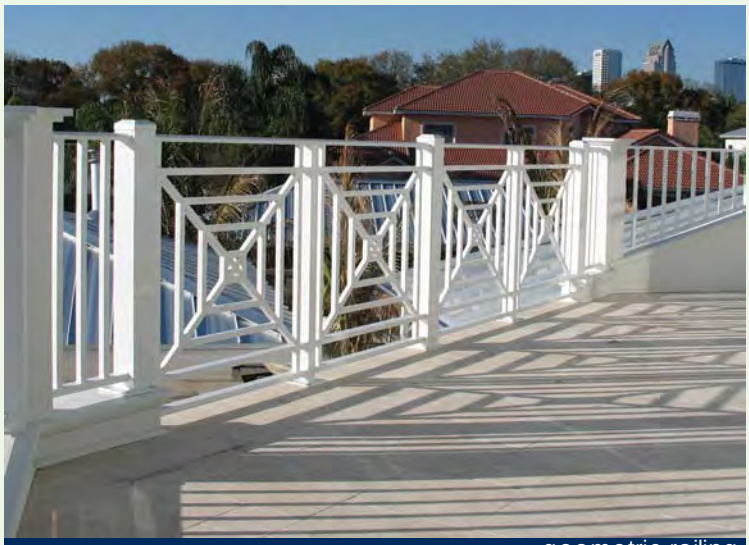

geometric railing

bowed picket railing

CUSTOM

Ideal offers the most innovative products in the industry but we don't stop there. You can bring your designs to us or leave it to the creative team at Ideal to make your dreams a reality. With years of experience and proven ideas, Ideal has become the only choice for custom aluminum fabrication. If it is aluminum we can build it!

custom waterjet gate

arched panels

interior railing

radius railing

custom gates

semi-privacy gates

louvered panels

Fence, gates and railings are meant to imply limits. Ideal's products and services have no boundaries and go **Above and Beyond** the competition in making a "best-in-class" product and in serving our customers.

Ideal's customers acknowledge that doing business with Ideal is different from working with every other vendor they have. Ideal goes **Above and Beyond** in the entire customer service experience from quality of product, to custom capabilities. Ideal is universally known to have the most creative minds in the business. If it is aluminum, we can make it. Ideal also provides unparalleled service. Our Idealcoat powder coating has been certified by Spraylat as meeting AAMA 2604 and AAMA 2605 standards, to provide an industry leading finish to all of our materials. All products are fabricated domestically meaning that you get the very best quality at a fair price. Ideal's QuickShip program is also tops in the industry allowing for faster delivery of your fence.

The Fence Solution by Ideal allows property owners to see how Ideal's fence will actually look on their property prior to purchase. Take a picture of the home or commercial property, upload it, and aesthetically understand what Ideal's product will look like instantaneously.

Visit Ideal Aluminum Products at www.ideal-ap.com for our full product line, accessory options, photo galleries, engineered drawings, warranty information, digital brochures and the Fence Solution.

Let Ideal Aluminum help you find solutions for all your aluminum fence, railing and gate needs.

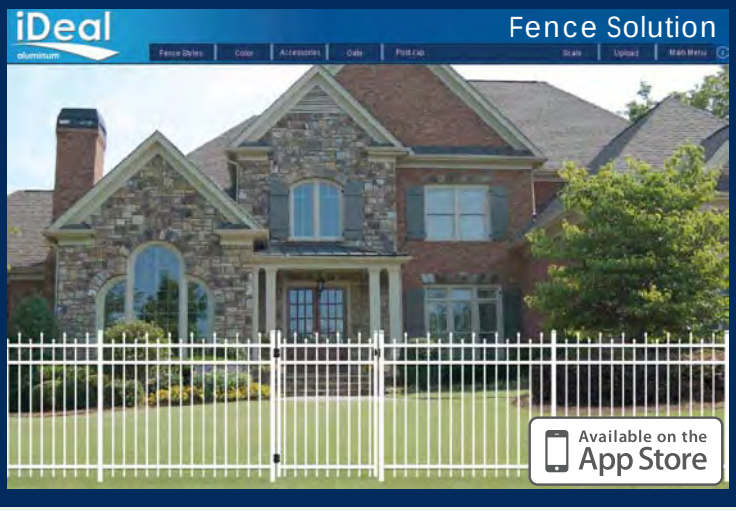

iDeal aluminum

fence gates railing

Ideal Aluminum Products
2000 Brunswick Lane Deland, FL 32724
Phone: 386.736.1700
Toll Free: 877.323.6496
Fax: 386.822.4950
www.ideal-ap.com

iDeal LIMITED LIFETIME WARRANTY

ALL PRODUCTS PROUDLY MADE IN USA

white tan bronze

black hunter green custom colors

Go green with powder coating

AFA MEMBER

NAFCA North American Fence Contractors Association

Authorized Dealer of Ideal Aluminum Products

Tab 5

Proposal

Guardian Hurricane Protection, Inc.
1410 Pine Ridge Road
Suite #16
Naples, FL 34108
(239) 491-2299

Product Specialist	Project Name	Date
Carl Priebe	Paseo - Guard Gate	8/5/2019

Bill To	Job Address
Paseo 11980 Paeso Grande Blvd. Fort Myers, FL 33912 Attn: Balinda Blandon bblandon@rizzetta.com	Paseo 11980 Paeso Grande Blvd. Fort Myers, FL 33912 Attn: Balinda Blandon bblandon@rizzetta.com

Description of Work

Proposal is for the supply and installation of CGI Sentinel series impact rated sliding glass door. New products to have bronze aluminum frames and laminated clear glass. Installation will adhere to the current Florida Building Codes.

1 - 48" x 104" xp 1 panel 2 track pocket sliding glass door with colonial applied grids = $3,847.50
Engineering and permit fee = $390.00

Total Investment	$4,237.50

All material is guaranteed to be as specified and the above work to be performed in accordance with The Florida Building Code.

Please note: all custom orders are non refundable. This proposal is valid for 30 days.

Acceptance of Proposal:
The above prices, terms, specifications and conditions are satisfactory and are hereby accepted.
You are authorized to do the work as specified

Signature

Date

WE SINCERELY APPRECIATE YOUR BUSINESS

Gulf Coast Builders Inc.
Your Window and Remodeling Specialists

10821 Sunset Plaza Circle Unit 302
Fort Myers, FL 33908
Ph: (239) 454-7780 Fx: (239) 454-7789
www.gulfcoastbuildersinc.com
info@gulfcoastbuildersinc.com

PROPOSAL

State Certified Building Contractor
License # CBC058853

NAME: Paseo **DATE:** 7/31/2019
ADD: 11980 Paseo Grande Blvd
UNIT: Guard Shack **ST:** FL **PH:** 239-333-7353 (Michael)
CITY: Fort Myers **ZIP:** 33912 **Email:** bblandon@rizzetta.com

We hereby submit specifications and estimates for the products listed below that meet the current Florida Building Code requirements: Supply and install PGT Impact-Resistant Aluminum frame, Bronze finish Sliding Glass Door, Series 770. All glass is Impact-Single Glazed and Grey tint. Door will come with Double Applied Exterior Colonial Grids.

1 Sliding Glass Door 47 1/4 x 104, 1 panel/2 track, Pocket-Right, XP	$ 4,087.00
Note: *Colonial grids will be 1" Raised Exterior/Flat Interior Double Applied*	
ADD: $414.00 for Impact-Insulated Grey Tinted Glass	
Note: *With this option Colonial Grids will be 9/16" Insulated Grids Between the glass*	
Permit fees as required by The City of Fort Myers	$ 175.00

NOTES: Installation lead time: 8-10 weeks. No Painting, no wallpaper repair, no alarm work, no fire sprinkler work, no electrical and no tile work. Any tile or wood floor repair, tile or wood flooring is to be supplied by the homeowner for repair by GCB at time of installation. Any home built before 1978 will be tested for lead prior to commencement of work at no charge.

Total	$ 4,262.00
Less Deposit	
Balance Due	

Terms & Conditions: All material is guaranteed to be as specified by the manufacture standards that adhere to the ASTM industry standards. Manufacture and ASTM industry standards can be found on our website www.gulfcoastwindowsanddoors.com. All work to be completed in a professional manner according to standard practices. Any alteration or deviation from above specifications involving extra costs will be executed only upon written orders, and will become an extra charge over and above the estimate. All agreements contingent upon strikes, accidents or delays beyond our control. Owner to carry fire, tornado and other necessary insurance. Our workers are fully covered by Workmen's Compensation Insurance. **Payment Terms:** The customer shall pay a 30% deposit for the approved work as outlined in this proposal. **Add a 2% convenience fee if paying by credit card.** Final payment is due upon completion of the approved job. Any payment not made within 30 days of job completion date shall incur a late payment charge of 1.5% per month of the total balance due. Failure to pay in full upon job completion within the agreed upon terms will result in a construction lien against your property according to Florida's Construction Lien Law (Sections 713.001-713.37, Florida Statutes). The final balance will be invoiced upon completion of work and upon all required inspections passing with the appropriate building department. Gulf Coast Builders will withhold the appropriate dollar amount from the final invoice pending any manufacturing issues not applicable to anything within ASTM industry standards as stated by the manufactures. All manufacturing issues will be handled accordingly and once resolved, the homeowner is responsible for paying the said withheld amount. Payment may be available from the Florida Homeowners' Construction Recovery Fund if you lose money on a project performed under contract, where the loss results from specified violations of Florida law by a licensed contractor. For information about the recovery fund and filing a claim, contact the Florida Construction Industry Licensing Board (850) 487-1395, Division of Professions Construction Licensing Board, 1940 North Monroe St., Tallahassee, FL 32399.

We propose hereby to furnish material and labor, complete in accordance with the above specifications, for the total listed. Note: This proposal may be withdrawn if not accepted within _____ days.

Authorized Signature **Date**

Acceptance of Proposal: The above prices, specifications and conditions are satisfactory and hereby accepted. You are authorized to do the work specified. Payment will be made as outlined above.

Homeowner (s) Signature **Date**

Tab 6

Invoice #330

May 19, 2019

BILL TO

Paseo Community Development District
Paseo At Penzance
Fort Myers, Fl 33912
Bblandon@rizzetta.com

FROM

Accent Outdoor Lighting LLC
25221 Bernwood Dr Ste 1
Bonita Springs, FL 34135
lights7810@gmail.com
+1 2394942733

INVOICE ITEMS		AMOUNT
212 Diplomat Large Wash 7 watt LED @$189 per		$40,068.00
98- Epic Lg Bullet 12 watt 40* @ $229 per		$22,442.00
271- Brass Risers 12”. @$20 per		$5,420.00
25 Deck lights on the 4 Gazebos and the dock(Crescent) @ $189 per		$4,725.00
14- in ground Paver path lights 1 inch above ground @ $189 per	In ground substituted for Path Lights Cost is the same	$2,646.00
29- 300 Watt Transformers with Lithium Battery backup, photocell digital controller @ $299 per		$8,671.00
8- 500’ Landscape direct burial copper wire @ .$35 per foot		$1,400.00
12- Icon small bullet around round abouts @ $189 per		$2,268.00
All Labor is included as well as outlets installed by electrician.		$0.00

INVOICE ITEMS	AMOUNT
All LED Bulbs are Free with the purchase of the new fixtures	$0.00
All Fixtures come with a Lifetime Warranty, Transformers have a 10 year Warranty and all LED Bulbs come with a 5 year Warranty. There expected to last 10-15 years, the Transformers and built in photocells are of high quality and take zero maintenance	$0.00

$87,640.00

PAYMENT DUE

MESSAGE

Thank you for your business.

LIGHTSCAPES

DISTINCTIVE LANDSCAPE LIGHTING

16000 Old 41 Road, Ste 205
Naples, FL 34110

LLC. ES12000887

PASEO COMMUNITY DEVELOPMENT DISTRICT

LANDSCAPE LIGHTING PROJECT

AUGUST 19, 2019

All Contents within are Lightscapes, Inc. Proprietary
Not to be shared external from Paseo Community Dev District

Ken Robertson 239-595-2656

Email: ken@lightscapesinc.com • Web: Landscapelightingbylightscapes.com

LIGHTSCAPES

DISTINCTIVE LANDSCAPE LIGHTING

16000 Old 41 Road, Ste 205
Naples, FL 34110

LLC. ES12000887

Paseo Community Development District
Attention: Belinda Blandon, District Manager
9530 Marketplace Road, Suite 206
Fort Myers, FL 33912

Subject: Landscape Lighting Proposal, Paseo of Fort Myers

DEAR PASEO COMMUNITY DEVELOPMENT DISTRICT,

Thank you for the opportunity to bid on your landscape lighting project to enhance both the beauty of the property as well as the owner experience. At Lightscapes, that is our daily goal. We take our customers' existing property and landscaping and 'bring it to life' at night, focusing on the key beautiful elements and using light to highlight them. Our lighting designs are subtle and developed with the ultimate goal of enhancing the overall feel and mood of the property.

All our lighting fixtures are low voltage LED products made of solid brass and have a limited lifetime warranty. They are specifically selected for each landscape feature we are lighting and are exclusively made for landscaping and the harsh environment they operate in. Again, our focus at Lightscapes is not just lighting a tree or bush with a light fixture. Based on our theatrical lighting experience and knowledge of lighting technologies, we are lighting to create a coordinated effect that ties together all the areas of the community, thereby enhancing the total experience of the owners.

Our bid is based on the following understanding and goals for the scope of work:

- Provide a maximum of 400 LED light fixtures and LED luminaires, including large and small wash lights, large and small bullets, bollard and risers as needed (NO on-ground deck lights, NO rope lights).
- All new transformers.
- All wiring and electrical work, including costs of any electrician.
- Full maps of lighting layout, which should be provided before award but can be provided after award but before installation. As-builds will be provided after installation showing wiring connectivity.

Ken Robertson 239-595-2656

Email: ken@lightscapesinc.com • Web: Landscapelightingbylightscapes.com

LIGHTSCAPES

DISTINCTIVE LANDSCAPE LIGHTING

16000 Old 41 Road, Ste 205
Naples, FL 34110

LLC. ES12000887

- West side of Paseo fence line along Penzance must match East side of Paseo fence line
- All four gazebos and fishing pier must be lit appropriately.
- Color LEDs at the front entrance and appropriate controllers/transformers.
- Lighting of the two Traffic Circles along Paseo Grande Blvd.
- Lighting of palms, walkways along area south of Bridge along Paseo Drive to Paseo Grande Blvd.

The attached proposal details the overall site plan and specific areas to be lit within the site. For each area, we state the types of light fixtures, the quantity of each, and the general locations for the fixtures. We also provide a price for each of the specific areas, although the prices indicated are effective only as a package (ie awarded the entire job).

We look forward to discussing our proposal with you at your convenience. We believe we are specially suited to provide the excellent lighting design and installation your community deserves!!

Sincerely,

Ken Robertson & Larry Lattanzio
Lightscapes Inc.
Distinctive Landscape Lighting Design and Installation

Enclosure

Ken Robertson 239-595-2656

Email: ken@lightscapesinc.com • Web: Landscapelightingbylightscapes.com

PROJECT OVERVIEW: PASEO FORT MYERS

LANDSCAPE LIGHTING BY
LIGHTSCAPES
"NAPLES"

Your specialist in distinctive landscape lighting
Design & Installation

239-595-2656
16000 Old 41 Road, Ste 205, Naples, FL 34110

Date AUG 19 2019

Area(s) PASEO FRONT ENTRANCE

Name PASEO COMMUNITY DEV DISTRICT
Address 9530 MARKETPLACE RD.
Phone 239-936-0913

QUANTITY	ITEM	DESCRIPTION/FUNCTION
80	UPLIGHTS, WALL WASHERS + MINI PATH	
	LIGHTS ON LEFT + RIGHT	SIDES OF ENTRY
	GATE, RIGHT ISLAND, +	REAR ISLAND.
	NEW TRANSFORMERS TO	CONTROL. ALL
	WARM WHITE (3000K)	COLOR.
20	FULL COLOR SPECTRUM	UPLIGHTS PRIMARILY
	IN FRONT CENTER ISLAND	WITH FOUNTAIN
	AND GUARD SHACK ISLAND.	INCLUDED WIRELESS
	TRANSFORMER TO FULLY	CONTROL LIGHTS
	+ COLOR SPECTRUM	
		$35,380.-

Service Call $75 + $50 per man hour & materials
Pre-season Yearly Service: We reposition lights knocked askance, trim vegetation covering lights & make your lighting new like the first day we installed them $300 .....
(Any Fixtures destroyed by others additional cost)

Lic. #ES12000887

Owner's Signature

Notes: Owner to supply electric necessary. Workmanship & fixtures guaranteed for life. LED light bulbs (2 YRS.) Timers one year.

LandscapeLightingByLightscapes.com • ken@lightscapesinc.com

FRONT ENTRANCE

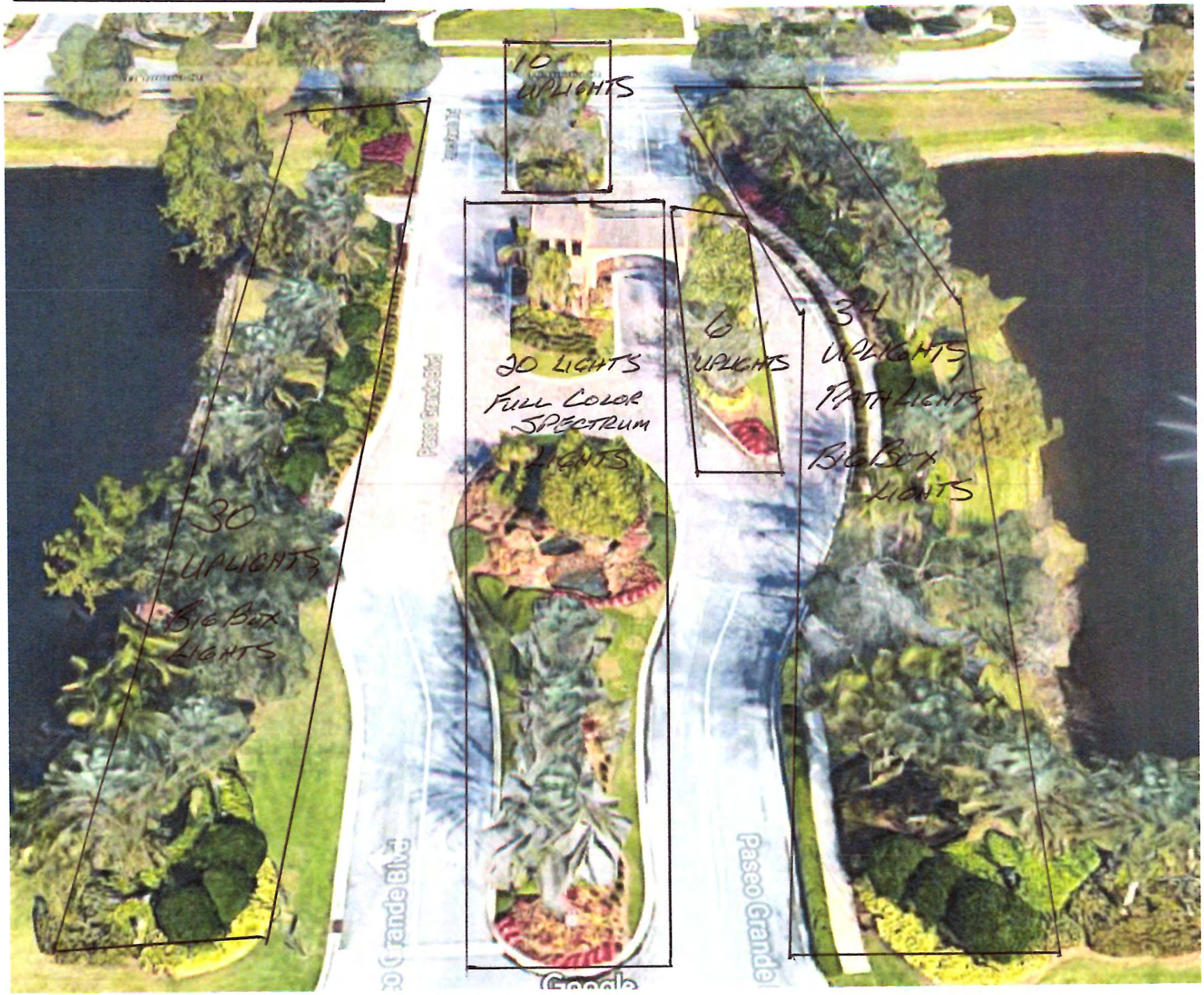

Dauer Lampen

Type: UPLIGHT

Model: ASTOR UPLIGHT

Project: PASEO FRONT ENTRANCE

SPECIFICATION SHEET

MODEL: 490007 "Astor" LED MR16 Uplight Fixture

INTERTEK ETL LISTED US

4009739

SPECIFICATIONS

HOUSING:
Cast brass with weathered brass finish. Lock-and-load shroud with double O-rings.

SOCKET/LAMP HOLDER:
One fixed ceramic bi-pin socket with stainless steel retaining springs.

LENS:
Clear tempered glass convex lens.

LAMP TYPE:
12V MR16. LED recommended. 35W maximum. See Dauer lamp ordering information on back page.

MOUNTING:
Stem threaded with 1/2" NPT. Heavy-duty composite stake included. May be mounted into threaded hubs in junction boxes or mounting accessories shown on back page.

WIRING:
Prewired with 5' pigtail of 18/2 cable.

WARRANTY:
Lifetime.

The sleek Astor uplight features a tempered glass convex lens that illuminates foliage and outdoor scenery with soft, mellow light. Crafted from cast brass with a weathered finish. Brass-knobbed swivel for creative directionality. A "lock-and-load" shroud features double O-rings for long-lasting protection. Mounting options are plentiful, such as the heavy-duty composite stake, which is included. Dozens of MR16 LED lamp choices are ideal for every application.

DIMENSIONS:

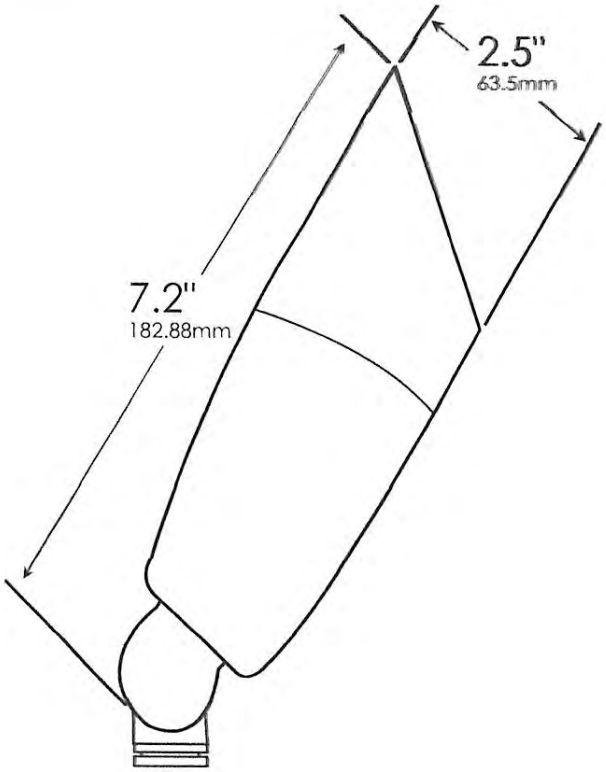

Dauer Manufacturing • 10100 NW 116th Way #14 • Medley, FL 33178
(800) 883-2590 • Fax (305) 594-9308 • www.DauerLampen.com • info@DauerLampen.com

MODEL: 490007 "Astor" LED MR16 Uplight Fixture

LED LAMP SPECIFICATIONS

LAMP TYPE:
Dauer MR16 UL-listed (E353116) 12V lamp with 5-year warranty, dimmable, and suitable for enclosed luminaires.

OPTICS:
Integral optics providing available beam spreads from 15° to 60°.

COLOR TEMPERATURES:
Color temperature options provide the following qualities: 2700K=ultra-warm; 3000K=warm white; 4000K=neutral white; 5000K=cool white. Decorative color light options include amber, blue, green, and red.

FIXTURE ORDERING INFORMATION
To order a lamped fixture with mounting options, select the appropriate choice from each column as in the following example:

EXAMPLE: 490007-5W-40-2700K-MS-R2

FIXTURE	LAMP			MOUNTING		RISER	
490007	WATTAGE	BEAM SPREAD	COLOR TEMP.	**MS**	Composite stake (incl.) 490029	**R2**	2" brass riser 490038
	2W	25° / 40° / 60°°	2700K / 3000K	**M3**	3-prong tri-stake 490030	**R3**	3" brass riser 490039
	4W	25° / 40° / 60°	2700K / 3000K	**MY**	Y-bracket surface mount 490045	**R6**	6" brass riser 490031
	5W	15° / 25° / 40° / 60°	2700K / 3000K	**MG**	Brass gutter mount 490047	**R12**	12" brass riser 490032
		25°	Amber / Blue / Green / Red	**MR**	Round 3-hole surface mount 490048	**R24**	24" brass riser 490033
	6W	25° / 40° / 60°	2700K / 3000K	**MP**	PVC mounting stake 490037		
	7W	25° / 40°	2700K / 3000K / 4000K / 5000K				
		60°	2700K / 3000K				

Dauer Manufacturing • 10100 NW 116th Way #14 • Medley, FL 33178
(800) 883-2590 • Fax (305) 594-9308 • www.DauerLampen.com • info@DauerLampen.com

Dauer Lampen™

SPECIFICATION SHEET

Type: BIG BOX WALL WASHER

Model: 'DIPLOMAT'

Project: PASEO FRONT ENTRANCE

MODEL: 490009 "Metropolitan" LED Bi-Pin Wall Wash Fixture

SPECIFICATIONS

HOUSING:
Cast brass with weathered brass finish. Angled shroud with gasketed lens.

SOCKET/LAMP HOLDER:
One fixed ceramic bi-pin socket accepts bi-pin lamps with G4 and GY6.35 bases.

LENS:
Clear and frosted tempered glass lenses included.

LAMP TYPE:
12V SMD or encapsulated bi-pin. 35W maximum. See Dauer lamp ordering information on back page.

MOUNTING:
Stem threaded with 1/2" NPT. Heavy-duty composite stake included. May be mounted into threaded hubs in junction boxes or mounting accessories shown on back page.

WIRING:
Prewired with 5' pigtail of 18/2 cable.

WARRANTY:
Lifetime.

The Metropolitan mini wall wash comes with clear and frosted glass lenses. The lens is gasketed into an angled shroud. Crafted from cast brass. A heavy-duty composite stake is included, and other mounting options are available. Tilt angle adjusts securely with a brass knob. Can be used for accenting building and barrier walls, as well as for lighting landscape features from below. A variety of LED bi-pin lamp intensities and hues are available.

DIMENSIONS:

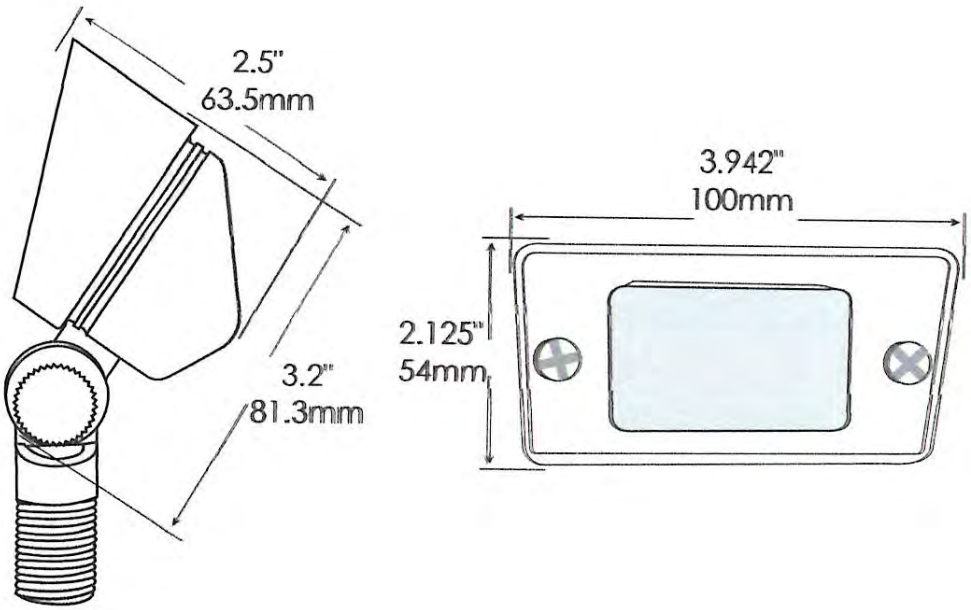

Dauer Manufacturing • 10100 NW 116th Way #14 • Medley, FL 33178
(800) 883-2590 • Fax (305) 594-9308 • www.DauerLampen.com • info@DauerLampen.com

MODEL: 490009 "Metropolitan" LED Bi-Pin Wall Wash Fixture

LED LAMP SPECIFICATIONS

LAMP TYPE:
Dauer IP65 outdoor-rated SMD or encapsulated bi-pin with 5-year warranty.

COLOR TEMPERATURES:
2800K warm white or 6000K cool white. Decorative color light options include amber, blue, green, and red.

FIXTURE ORDERING INFORMATION
To order a lamped fixture with mounting options, select the appropriate choice from each column as in the following example:

EXAMPLE: 490009-4W-S-2800K-MS-R2

FIXTURE	LAMP				MOUNTING		RISER	
490009	WATTAGE	TYPE		COLOR TEMP.	**MS**	Composite stake (incl.) 490029	**R2**	2" brass riser 490038
	2W	**E**	Encapsulated bi-pin	2800K / 6000K	**M3**	3-prong tri-stake 490030	**R3**	3" brass riser 490039
	2.2W	**S**	SMD bi-pin	2800K	**MY**	Y-bracket surface mount 490045	**R6**	6" brass riser 490031
	3W	**E**	Encapsulated bi-pin	2800K / 6000K	**MG**	Brass gutter mount 490047	**R12**	12" brass riser 490032
	3.3W	**S**	SMD bi-pin	2800K / Amber / Blue / Green / Red	**MR**	Round 3-hole surface mount 490048	**R24**	24" brass riser 490033
	4W	**E** **S**	Encapsulated bi-pin/ SMD bi-pin	2800K				
	5W	**S**	SMD bi-pin	2800K				

Dauer Manufacturing • 10100 NW 116th Way #14 • Medley, FL 33178
(800) 883-2590 • Fax (305) 594-9308 • www.DauerLampen.com • info@DauerLampen.com

Dauer Lampen™

SPECIFICATION SHEET

Type: MINI PATH LIGHT

Model: METROPOLITAN

Project: PASEO FRONT ENTRANCE

MODEL: 490010 "Diplomat" LED MR16/Bi-Pin Wall Wash Fixture

SPECIFICATIONS

HOUSING:
Cast brass with weathered brass finish. Angled shroud with gasketed lens.

SOCKET/LAMP HOLDER:
One fixed ceramic bi-pin socket accepts MR16 with GU5.3 base or bi-pin lamps with G4 and GY6.35 bases.

LENS:
Clear and frosted tempered glass lenses included.

LAMP TYPE:
12V SMD or encapsulated bi-pin or MR16. 35W maximum. See Dauer lamp ordering information on back page.

MOUNTING:
Stem threaded with 1/2" NPT. Heavy-duty composite stake included. May be mounted into threaded hubs in junction boxes or mounting accessories shown on back page.

WIRING:
Prewired with 5' pigtail of 18/2 cable.

WARRANTY:
Lifetime.

The cast brass Diplomat large wall wash casts a very broad and even light on surfaces and scenery. Choose between the included clear and frosted lens options. Dozens of bi-pin lamp options maximize your creative expression for wall washing applications, or install an MR16 LED lamp if you desire a longer throw or narrower, more directional beam-spread options ranging from 15° to 100°. Heavy-duty stake included.

DIMENSIONS:

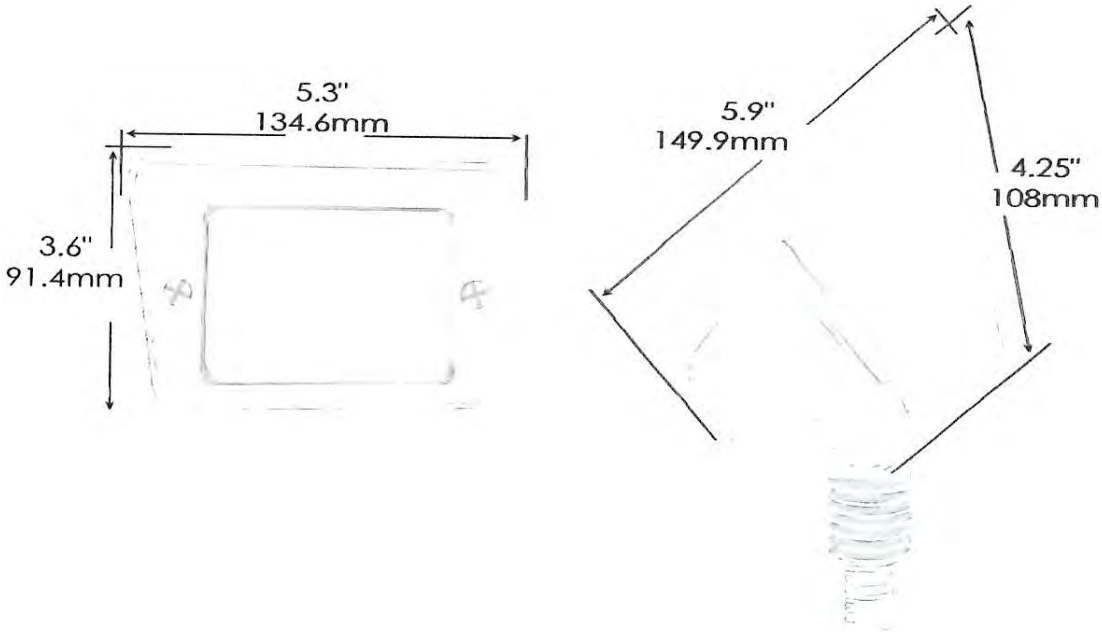

Dauer Manufacturing • 10100 NW 116th Way #14 • Medley, FL 33178
(800) 883-2590 • Fax (305) 594-9308 • www.DauerLampen.com • info@DauerLampen.com

MODEL: 490010 "Diplomat" LED MR16/Bi-Pin Wall Wash Fixture

LED LAMP SPECIFICATIONS

LAMP TYPES:
Dauer MR16 UL-listed (E353116) 12V lamp suitable for enclosed luminaires, or Dauer IP65 outdoor-rated SMD or encapsulated bi-pin, all with 5-year warranty.

OPTICS:
MR16 integral optics providing available beam spreads from 15° to 100°. No optics for SMD or encapsulated bi-pin lamps.

COLOR TEMPERATURES:
Color temperature options provide the following qualities: 2800K and 3000K=warm white; 4000K=neutral white; 5000K and 6000K=cool white. Decorative color light options include amber, blue, green, and red.

FIXTURE ORDERING INFORMATION
To order a lamped fixture with mounting options, select the appropriate choice from each column as in the following example:

EXAMPLES: 490010-5W-MR16-40-2700K-MS-R2
490010-2W-E-6000K-M3-R12

FIXTURE	LAMP			MOUNTING		RISER	
490010	TYPE	BEAM SPREAD	COLOR TEMP.	MS	Composite stake (incl.) 490029	R2	2" brass riser 490038
	2W-MR16	25° / 40° / 60° / 100°	2700K / 3000K	M3	3-prong tri-stake 490030	R3	3" brass riser 490039
	4W-MR16	25° / 40° / 60° / 100°	2700K / 3000K	MY	Y-bracket surface mount 490045	R6	6" brass riser 490031
	5W-MR16	15° / 25° / 40° / 60° / 100°	2700K / 3000K	MG	Brass gutter mount 490047	R12	12" brass riser 490032
		25°	Amber / Blue / Green / Red	MR	Round 3-hole surface mount 490048	R24	24" brass riser 490033
	6W-MR16	25° / 40° / 60°	2700K / 3000K	MP	PVC mounting stake 490037		
	7W-MR16	25° / 40°	2700K / 3000K / 4000K / 5000K				
		60°	2700K / 3000K				
	2W-E (encapsulated bi-pin)		2800K / 6000K				
	3W-E (encapsulated bi-pin)		2800K				
	3.3W-S (SMD bi-pin)		Amber / Blue / Green / Red				
	4W-S (SMD bi-pin)		2800K				
	5W-S (SMD bi-pin)		2800K				

Dauer Manufacturing • 10100 NW 116th Way #14 • Medley, FL 33178
(800) 883-2590 • Fax (305) 594-9308 • www.DauerLampen.com • info@DauerLampen.com

FXLuminaire

PASEO FRONT ENTRANCE
PROJECT
NP-ZDC-BZ
CATALOG #
FULL COLOR SPECTRUM UPLIGHT
TYPE
NOTES

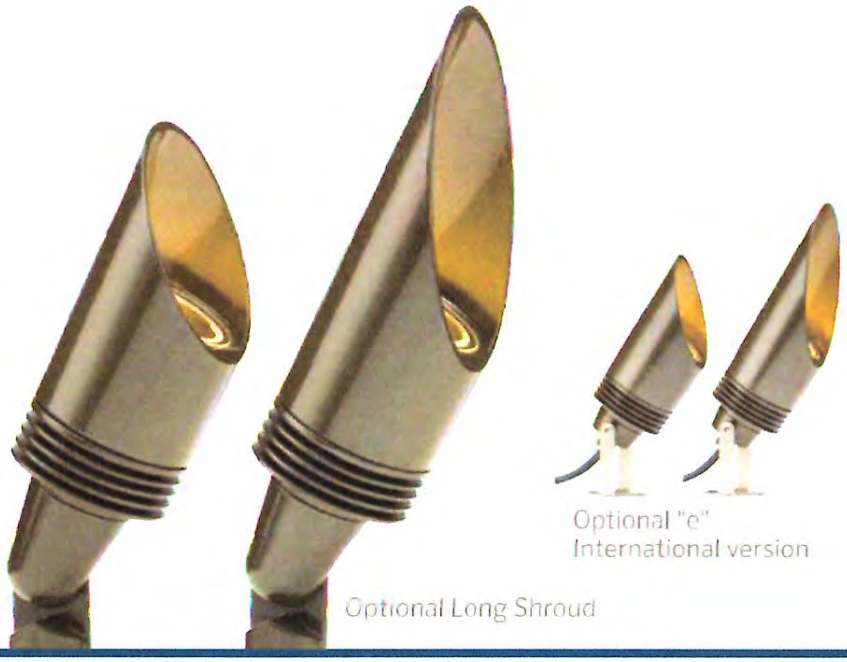

NP Up Light DESIGNER PLUS

Expertly engineered with 45° or 60° shroud options to illuminate a variety of spaces in 3, 6, or 9 LED. An RGBW version is also available for use with Luxor™ ZDC systems.

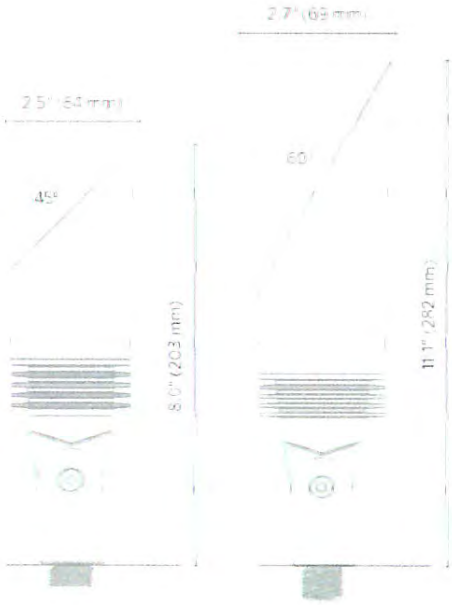

Quick Facts

- Die-cast aluminum
- Two-layer marine-grade anodization and powder coat finish
- Cree® integrated LEDs
- ProAim™ adjustability
- Tamper-resistant features
- Color temperature filters
- Compatible with Luxor technology
- Phase and PWM dimmable
- Input voltage: 10-15V

NP Up Light SPECIFICATIONS

Output	3LED	6LED	9LED	ZDC
Total Lumens†	135	280	360	110
Input Voltage	10 to 15V	10 to 15V	10 to 15V	11 to 15V
Input Power (W):	4.2	10.1	11.2	9.1
VA	4.5	13.5	13.5	11.0
Efficacy (Lumens/Watt)	32	28	32	21
Color Rendering Index (CRI)	80+	80+	80+	80+
Center Beam Candlepower*				
Spot (17-20)	464	1,069	897	172
Dimming	PWM, Phase**	PWM, Phase**	PWM, Phase**	--
RGBW Available	No	No	No	Yes
Luxor Compatibility				
Default	Zoning	Zoning	Zoning	--
ZD Option	Zoning/Dimming	Zoning/Dimming	Zoning/Dimming	--
ZDC Option	--	--	--	Zoning/Dimming/ Color
Minimum Rated Life (L70)	50,000 Hrs	50,000 Hrs	50,000 Hrs	50,000 Hrs

** Information not available for Flood or Wide Flood.*

*** For optimal performance, use a trailing-edge, phase-cut dimmer.*

† Measured using the 3,900K CCT lens. Multipliers for other CCTs include: 0.80 (2,700K), 0.65 (4,500K), and 0.65 (5,200K).

FX Luminaire
FX Luminaire is an industry-leading manufacturer of landscape and architectural lighting products with a focus on the advancement of LED technology and digital lighting control with zoning, dimming, and color adjustment capabilities. We offer a full spectrum of specification-driven lighting fixtures that can be utilized to create elegant, cutting-edge landscape lighting systems for commercial or residential applications. Our products are available exclusively via our extensive professional distributor network.

Materials
Die-cast aluminum A380 housing and shroud with stainless steel hardware. Die-cast zinc/aluminum alloy knuckle.

Socket
Socket contains MoistureBlock™ technology, preventing moisture from wicking up into sealed areas of the fixture.

Lamp
Integrated module with Cree LEDs. Gold-plated connectors and conformal coated for maximum reliability and corrosion resistance. Proprietary on-board intelligent driver uses firmware-controlled temperature regulation, maximizing LED life. Field upgradeable and replaceable, the LEDs are rated to 50,000 hrs. Maximum drive current: 1 A.

Optics
Polycarbonate color temperature adjustment lenses included with fixture: 2,700K (preinstalled), 3,900K (no lens), 4,500K, and 5,200K. Interchangeable optics for 10°, 20°, 30°-32°, or 55-58° distributions ordered pre-assembled to fixture. Color temperature and beam angle lenses field serviceable. For additional color filters, spread lenses, *hex baffles, etc., use MR-16* sized accessories (MR-16: 1.95" (49.5 mm) dia. x 1.1 mm thickness). Beam angle is calculated using LM-79 method for SSL luminaires.

Wiring
18 AWG (1 mm); SPT-1W, 220°F (105°C); 300V, 10 (3 m) length, pre-stripped.

Power
Input 10-15VAC/VDC 50/60Hz. Remote transformer required (specify separately).

Housing
Die-cast aluminum housing with capacity for 1LED, 3LED, 6LED, 9LED, or ZDC integrated LEDs.

Shroud
Die-cast aluminum shroud with 45° cutoff (standard) or 60° long shroud option.

Knuckle
Die-cast zinc/aluminum alloy knuckle with ½"-14 (13 mm) NPSM threads. *Compress and lock* features prevent slip after installation. 9° increments adjustability over 220° of vertical adjustment.

Lens
Tempered glass lens with shock resistance and high tolerance for thermal expansion and stress.

Weight
1.9 lbs. (0.9 kg)

Finish
Two-layer protection of sulfuric acid anodization and polyester TGIC powder coat, providing superior outdoor weathering in all conditions. Tested to ASTM standards.

Hardware
Stainless steel angle lock screw. Includes 10" (254 mm) ABS slotted installation spike.

International Compliance
Compliant per IEC 60598-1 and IEC 60598-2-7 when used with international Spike Kit ("EKITSPIKE") or alternate mount greater than or equal to IP65, or by selecting the "e" version.

Ambient Operating Temperature
0°F to 140°F (-18°C to 60°C)

Sustainability
Innovation meets conservation in the design and manufacturing of our products. Where we can, we use recycled materials while maintaining superior functionality. Our LED products provide high-quality light at optimal energy efficiency, lifespan, and durability.

Installation Requirements
Designed for installation in the upward direction only.

Control
ZD or **ZDC** options utilize Luxor technology to zone light fixtures in up to 250 groups, dim each group in 1% increments between 0 and 100%, or change to one of 30,000 colors with RGBW LEDs. Select the ZD option for zoning/dimming or ZDC for zoning/dimming/color. Standard fixture is zoneable with **Luxor**.

Manufacturing
ISO 9001:2015 certified facility.

Warranty
10-year limited warranty.

Listings
c UL us LISTED 3YJ8
RoHS COMPLIANT
CE
IP 65

PASEO FRONT ENTRANCE
PROJECT
LUXOR CONTROLLER
CATALOG #
TRANSFORMER, WIRELESS,
TYPE
FULL ZONE, DIMMING, RGBW
NOTES
COLOR
COMBO'S

LUXOR Controller

Lighting control with zoning, dimming, and RGBW color creation capabilities, plus optional Wi-Fi control using Luxor® technology.

Quick Facts

- 250 independent lighting zones, no matter the wiring configuration
- Adjust intensity from 0-100%
- 30,000 color options per zone (ZDC only)
- Compatible with FX Luminaire integrated LED fixtures
- Event-based scheduling
- Optional iOS® or Android™ control
- Luxor Linking compatible
- Wireless fixture assignment
- Astronomical timing
- Full-color LCD display
- 304 stainless steel and powder-coated galvanized construction

LUXOR Controller SPECIFICATIONS

Output

Power	150 W	300 W
Input Primary	120 V, 60 Hz	120 V, 60 Hz
Input Amperage Primary	1.48	2.68
Output Voltage Secondary	14 VAC	14 VAC
Maximum Open Circuit Volts	15 V	15 V
Class	2	2

FX Luminaire
FX Luminaire is an industry-leading manufacturer of landscape and architectural lighting products with a focus on the advancement of LED technology and digital lighting control with zoning, dimming, and color adjustment capabilities. We offer a full spectrum of highly efficient lighting fixtures that can be utilized to create elegant, cutting-edge landscape lighting systems for commercial or residential applications. Our products are available exclusively via our extensive professional distributor network.

Materials
304 stainless steel and powder-coated galvanized steel outer box and latch.

Programming
Create up to 250 independently adjustable lighting zones. Control each zone independently with separate on/off times, various intensities (1-100% in 1% increments).

Power
Input: 120 VAC, 60 Hz
Output: 14 VAC

Finish
Standard stainless steel finish and matte gray powder coat.

Linking
Luxor Linking offers an easy way to expand a multi-controller site. Add up to nine satellite units, which are all managed from a single point of control. The maximum hardwire (Cat 6) connection between the primary and furthest satellite controller is 3,000' (0.9 km).

Compatible Devices
Only fixtures or devices with ZD or ZDC Technology are compatible with the Luxor controller. Devices have varying levels of control, including: 1) zoning, or 2) zoning/dimming. Mix and match fixtures and devices with varying levels of control technology on a single system.

Fixture Assignment
Assign fixtures to zone number manually via assignment ports on facepack or wirelessly via light assignment module (specify LAM and network accessories separately).

Wi-Fi Connectivity
Connect to Wi-Fi or a network router by using Wi-Fi module accessories. Optional "Direct Connect" mode allows devices to connect directly to a single controller without using Wi-Fi or a network router.

Wiring
Heavy-gauge, grounded, water-resistant power cord with integrally molded plug. 5' (1.5 m) length. Standard low-voltage lighting wire required (e.g., 12-2, 10-2, etc.) between controller and fixtures. No additional communication wire is required.

Communication
Pre-installed 8" (203 mm) RJ-11 communication cable between facepack (i.e., user interface) and chassis (i.e., power unit). 10' (3 m) RJ-11 cable included in shipment for remote mounting option. Specify facepack mount accessory for clean installation.

Ambient Operating Temperature
0°F to 140°F (-18°C to 60°C)

App Control
Network module required. Specify LAN accessory or Wi-Fi accessory depending on site needs. "Luxor Controller" app is available for iOS and Android devices. Control via app available for on-site adjustability.

Weight
150W: 15.1 lbs. (7 kg)
300W: 23.1 lbs. (10.5 kg)

Installation Requirements
Designed for installation on a vertical surface in the upright position only.

Hardware
Two pan-head machined mounting screws with plastic anchors. Stainless steel mounting brackets attached to transformer box.

Sustainability
Innovation meets conservation in the design and manufacturing of our products. Where we can, we use recycled materials while maintaining superior functionality. Our LED products provide high-quality light at optimal energy efficiency, lifespan, and durability.

Warranty
10-year limited warranty.

Listings
4003158

iOS is a trademark or registered trademark of Cisco in the U.S. and other countries and is used under license. Android is a trademark of Google LLC.

LANDSCAPE LIGHTING BY
LIGHTSCAPES
"NAPLES"

Your specialist in distinctive landscape lighting
Design & Installation

239-595-2656

16000 Old 41 Road, Ste 205, Naples, FL 34110

Date AUG 19 2019

Area(s) GAZEBOS (4 TOTAL)

Name PASEO COMMUNITY DEV. DISTRICT

Address 9530 MARKETPLACE RD.

Phone 239-936-0913

PER GAZEBO

QUANTITY	ITEM	DESCRIPTION/FUNCTION
6	SCONCE LIGHTS (UP + DOWN LIGHTS) ON THE INSIDE	
	COLUMNS OF GAZEBO	
8	MINI PATH LIGHTS ON ENTRY WALKWAYS	
1	TRANSFORMER TIED IN TO EXISTING POWER OR	
	AT NEW POWER OUTLET DERIVED FROM STREET LIGHT CONVERSION	
	TOTAL, FOUR GAZEBOS	
24	SCONCE LIGHTS	
32	MINI PATH LIGHTS	
4	TRANSFORMERS	
		$14,900.-

Service Call $75 + $50 per man hour & materials

Pre-season Yearly Service: We reposition lights knocked askance, trim vegetation covering lights & make your lighting new like the first day we installed them $300 .....

(Any Fixtures destroyed by others additional cost)

Lic. #ES12000887

Owner's Signature

Notes: Owner to supply electric necessary. Workmanship & fixtures guaranteed for life. LED light bulbs (2 YRS.) Timers one year.

LandscapeLightingByLightscapes.com • ken@lightscapesinc.com

GAZEBO AND TRAFFIC CIRCLE OVERVIEW: POWER

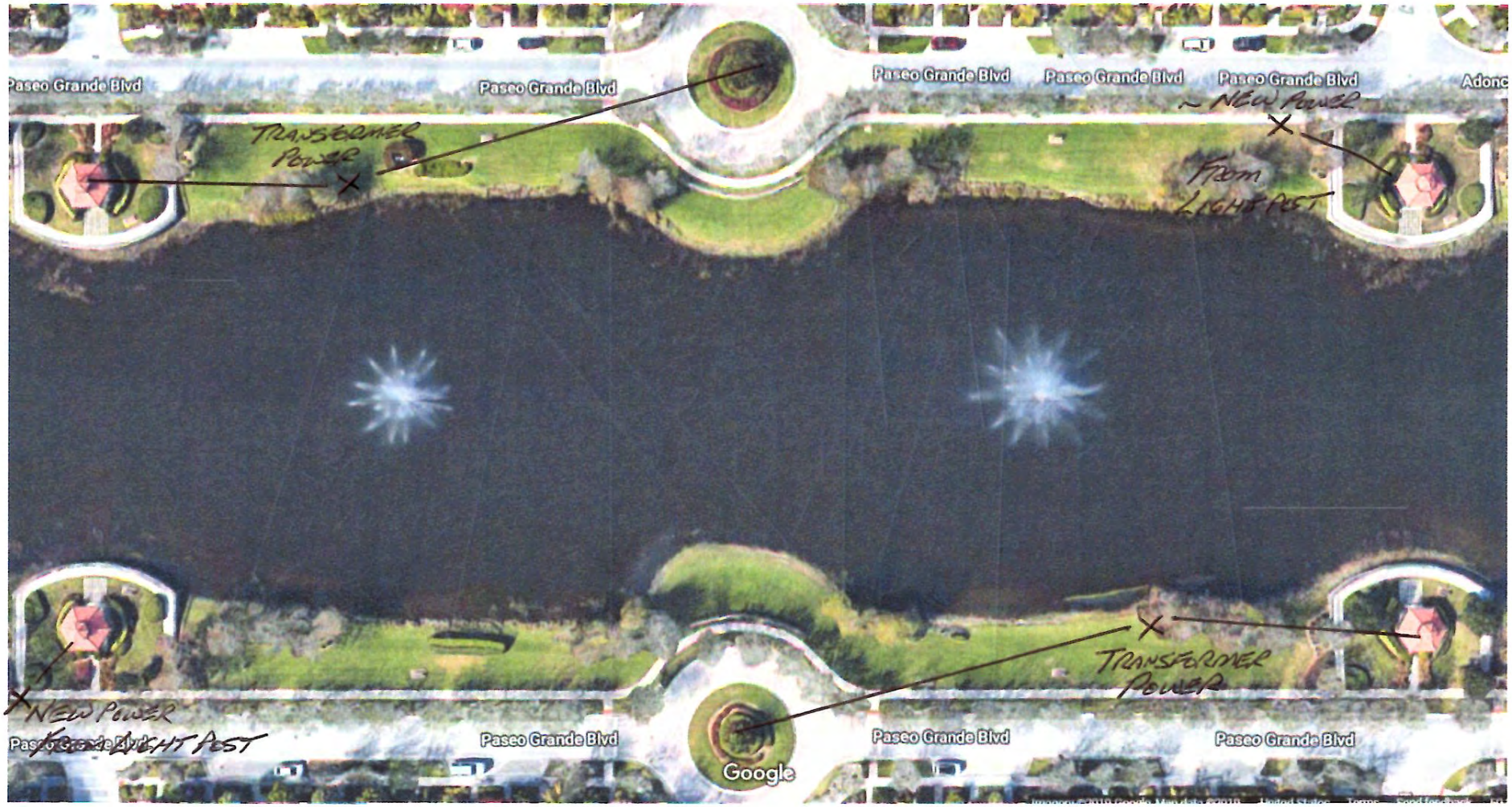

GAZEBO (x 4)

6 EA. SCONCE LIGHT (UP + DOWN LIGHT) FIXTURE. MOUNTED ON INSIDE VERTICLE POSTS

8 EA. MINI PATH LIGHT FIXTURE

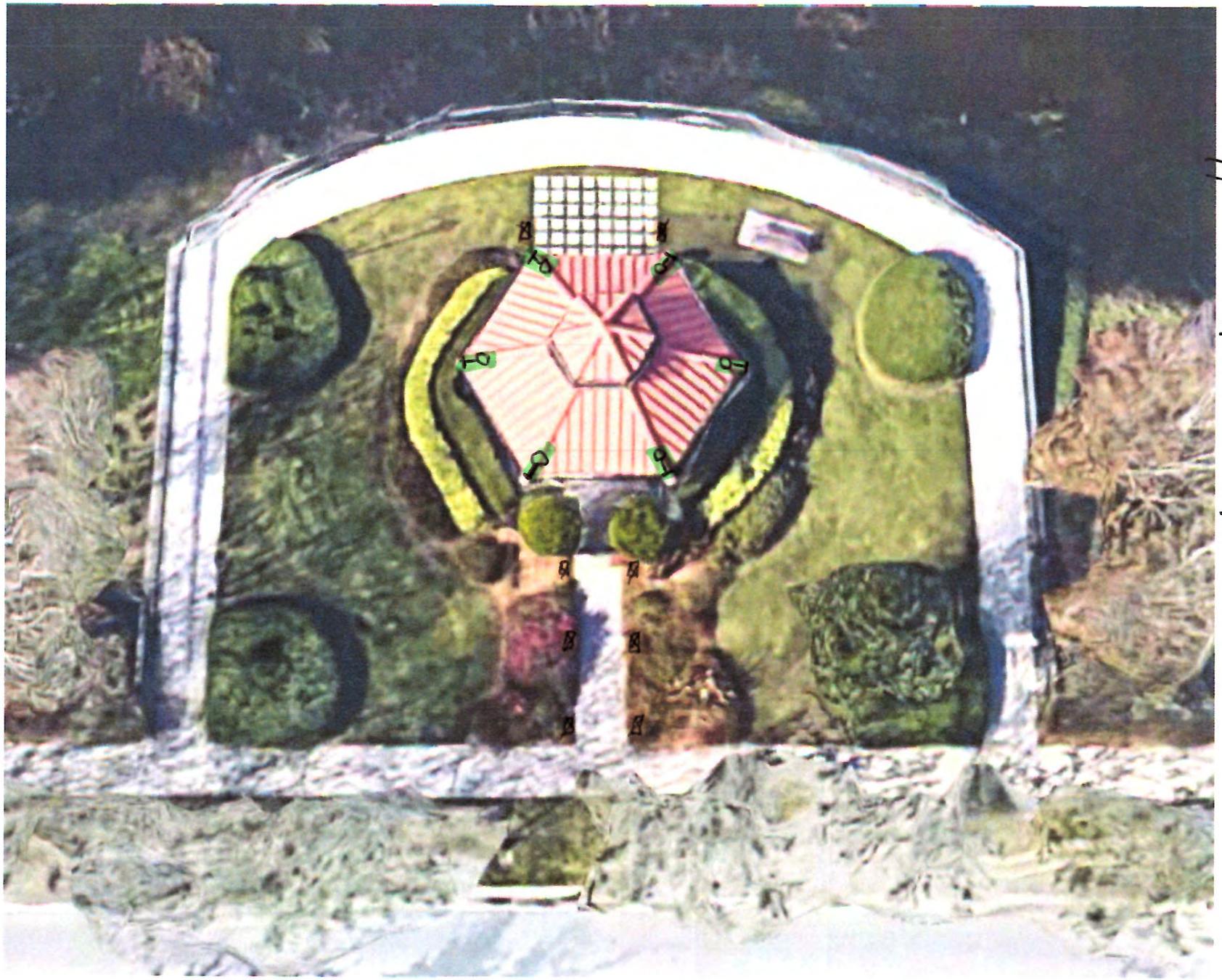

Dauer Lampen™

SPECIFICATION SHEET

Type: SCONCE LIGHT

Model: 'CABANA' WALL SCONCE

Project: PASEO 'GAZEBO'

MODEL: 490090 "Cabana" LED MR16 Wall Sconce Fixture

SPECIFICATIONS

HOUSING:
Cast brass with weathered brass finish. Threaded cap with O-rings.

SOCKET/LAMP HOLDER:
Two fixed ceramic bi-pin sockets with stainless steel retaining springs.

LENS:
Clear tempured glass convex lenses.

LAMP TYPE:
Two 12V MR16s. Matching LEDs recommended. 35W maximum. See Dauer lamp ordering information on back page.

MOUNTING:
Mounts to standard electrical box with screws.

WIRING:
Prewired with 5' pigtail of 18/2 cable.

WARRANTY:
Lifetime.

The cast brass Cabana up-and-down wall sconce utilizes two MR16 LED lamps to provide a wide range of effects. By choosing the desired lamp options, you can set the intensity, warmth (from moonlight to firelight), and beam coverage (from 15° to 100°).

DIMENSIONS:

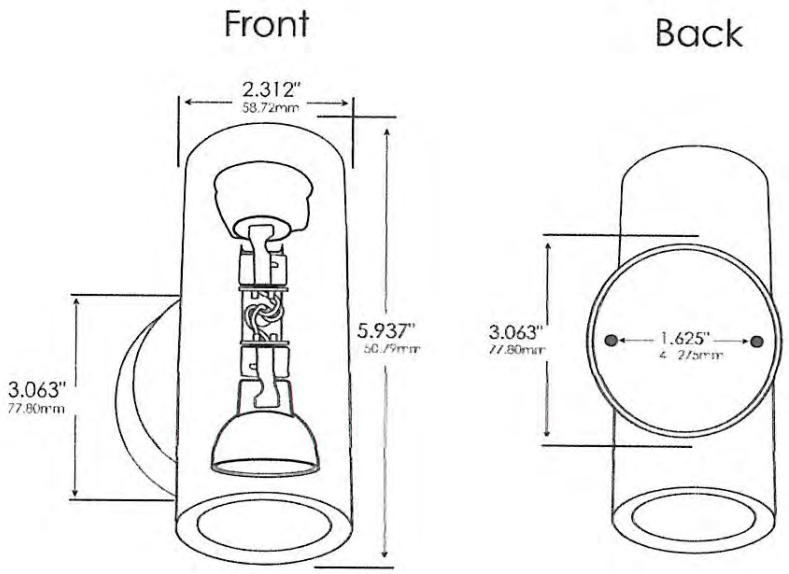

Dauer Manufacturing • 10100 NW 116th Way #14 • Medley, FL 33178
(800) 883-2590 • Fax (305) 594-9308 • www.DauerLampen.com • info@DauerLampen.com

MODEL: 490090 "Cabana" LED MR16 Wall Sconce Fixture

LED LAMP SPECIFICATIONS

LAMP TYPE:
Two 12V Dauer MR16 UL-listed (E353116) lamps with 5-year warranty, dimmable, and suitable for enclosed luminaires.

OPTICS:
Integral optics providing available beam spreads from 15° to 40°.

COLOR TEMPERATURES:
Color temperature options provide the following qualities: 2700K=ultra-warm; 3000K=warm white; 4000K=neutral white; and 5000K=cool white. Decorative color light options include amber, blue, green, and red.

FIXTURE ORDERING INFORMATION
To order a lamped fixture, select the appropriate choice from each column as in the following example:

EXAMPLE: 490090-5W-40-2700K

FIXTURE	LAMP		
490090	WATTAGE	BEAM SPREAD	COLOR TEMP.
	2W	25° / 40°	2700K / 3000K
	4W	15° / 25° / 40°	2700K / 3000K
	5W	15° / 25° / 40°	2700K / 3000K
		25°	Amber / Blue / Green / Red
	6W	25° / 40°*	2700K / 3000K
	7W	25° / 40°	2700K / 3000K / 4000K / 5000K

Dauer Manufacturing • 10100 NW 116th Way #14 • Medley, FL 33178
(800) 883-2590 • Fax (305) 594-9308 • www.DauerLampen.com • info@DauerLampen.com

Dauer Lampen™

SPECIFICATION SHEET

Type: MINI PATH LIGHTS

Model: 'METROPOLITAN'

Project: PASEO 'GAZEBO'

MODEL: 490009 "Metropolitan" LED Bi-Pin Wall Wash Fixture

SPECIFICATIONS

HOUSING:
Cast brass with weathered brass finish. Angled shroud with gasketed lens.

SOCKET/LAMP HOLDER:
One fixed ceramic bi-pin socket accepts bi-pin lamps with G4 and GY6.35 bases.

LENS:
Clear and frosted tempered glass lenses included.

LAMP TYPE:
12V SMD or encapsulated bi-pin. 35W maximum. See Dauer lamp ordering information on back page.

MOUNTING:
Stem threaded with 1/2" NPT. Heavy-duty composite stake included. May be mounted into threaded hubs in junction boxes or mounting accessories shown on back page.

WIRING:
Prewired with 5' pigtail of 18/2 cable.

WARRANTY:
Lifetime.

The Metropolitan mini wall wash comes with clear and frosted glass lenses. The lens is gasketed into an angled shroud. Crafted from cast brass. A heavy-duty composite stake is included, and other mounting options are available. Tilt angle adjusts securely with a brass knob. Can be used for accenting building and barrier walls, as well as for lighting landscape features from below. A variety of LED bi-pin lamp intensities and hues are available.

DIMENSIONS:

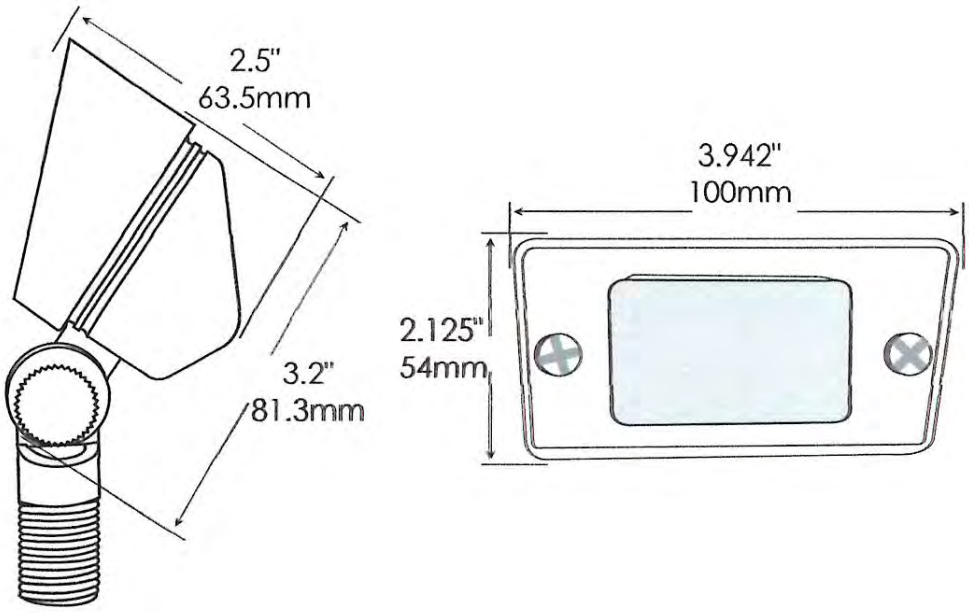

Dauer Manufacturing • 10100 NW 116th Way #14 • Medley, FL 33178
(800) 883-2590 • Fax (305) 594-9308 • www.DauerLampen.com • info@DauerLampen.com

MODEL: 490009 "Metropolitan" LED Bi-Pin Wall Wash Fixture

LED LAMP SPECIFICATIONS

LAMP TYPE:
Dauer IP65 outdoor-rated SMD or encapsulated bi-pin with 5-year warranty.

COLOR TEMPERATURES:
2800K warm white or 6000K cool white. Decorative color light options include amber, blue, green, and red.

FIXTURE ORDERING INFORMATION
To order a lamped fixture with mounting options, select the appropriate choice from each column as in the following example:

EXAMPLE: 490009-4W-S-2800K-MS-R2

FIXTURE	LAMP				MOUNTING		RISER	
490009	WATTAGE	TYPE		COLOR TEMP.	MS	Composite stake (incl.) 490029	R2	2" brass riser 490038
	2W	E	Encapsulated bi-pin	2800K / 6000K	M3	3-prong tri-stake 490030	R3	3" brass riser 490039
	2.2W	S	SMD bi-pin	2800K	MY	Y-bracket surface mount 490045	R6	6" brass riser 490031
	3W	E	Encapsulated bi-pin	2800K / 6000K	MG	Brass gutter mount 490047	R12	12" brass riser 490032
	3.3W	S	SMD bi-pin	2800K / Amber / Blue / Green / Red	MR	Round 3-hole surface mount 490048	R24	24" brass riser 490033
	4W	E S	Encapsulated bi-pin/ SMD bi-pin	2800K				
	5W	S	SMD bi-pin	2800K				

Dauer Manufacturing • 10100 NW 116th Way #14 • Medley, FL 33178
(800) 883-2590 • Fax (305) 594-9308 • www.DauerLampen.com • info@DauerLampen.com

LANDSCAPE LIGHTING BY
LIGHTSCAPES
"NAPLES"

Your specialist in distinctive landscape lighting
Design & Installation

239-595-2656

16000 Old 41 Road, Ste 205, Naples, FL 34110

Date AUG 19, 2019

Area(s) TRAFFIC CIRCLES (2 TOTAL)

SOLID BRASS LED

Name PASEO COMMUNITY DEV. DISTRICT

Address 9530 MARKETPLACE RD

Phone 239-936-0913

QUANTITY	ITEM	DESCRIPTION/FUNCTION
12	BIG BOX ('DIPLOMAT') WALL	WASHERS (6 TOTAL
	PER TRAFFIC CIRCLE) MOUNTED MORE INSIDE	
	THE SCHRUBS THAN THE EXISTING LIGHTING.	
	FOCUS ON PALM CLUSTER NO CENTER.	
	SOLID BRASS RISERS VS EXISTING PLASTIC.	
0	TRANSFORMERS. WILL TIE	IN TO TRANSFORMERS
	THAT WILL ALSO POWER	GAZEBOS.
		$3,750.-

Service Call $75 + $50 per man hour & materials

Pre-season Yearly Service: We reposition lights knocked askance, trim vegetation covering lights & make your lighting new like the first day we installed them $300 .....

(Any Fixtures destroyed by others additional cost)

Lic. #ES12000887

Owner's Signature

Notes: Owner to supply electric necessary. Workmanship & fixtures guaranteed for life. LED light bulbs (2 YRS.) Timers one year.

LandscapeLightingByLightscapes.com • ken@lightscapesinc.com

TRAFFIC CIRCLE (x2): 6EA BIG BOX 'DIPLOMAT' FIXTURES MOUNTED INSIDE FLOWER BED

Dauer Lampen™

SPECIFICATION SHEET

Type: BIG BOX WASHER

Model: DIPLOMAT'

Project: PASEO TRAFFIC CIRCLES

MODEL: 490010 "Diplomat" LED MR16/Bi-Pin Wall Wash Fixture

SPECIFICATIONS

HOUSING:
Cast brass with weathered brass finish. Angled shroud with gasketed lens.

SOCKET/LAMP HOLDER:
One fixed ceramic bi-pin socket accepts MR16 with GU5.3 base or bi-pin lamps with G4 and GY6.35 bases.

LENS:
Clear and frosted tempered glass lenses included.

LAMP TYPE:
12V SMD or encapsulated bi-pin or MR16. 35W maximum. See Dauer lamp ordering information on back page.

MOUNTING:
Stem threaded with 1/2" NPT. Heavy-duty composite stake included. May be mounted into threaded hubs in junction boxes or mounting accessories shown on back page.

WIRING:
Prewired with 5' pigtail of 18/2 cable.

WARRANTY:
Lifetime.

The cast brass Diplomat large wall wash casts a very broad and even light on surfaces and scenery. Choose between the included clear and frosted lens options. Dozens of bi-pin lamp options maximize your creative expression for wall washing applications, or install an MR16 LED lamp if you desire a longer throw or narrower, more directional beam-spread options ranging from 15° to 100°. Heavy-duty stake included.

DIMENSIONS:

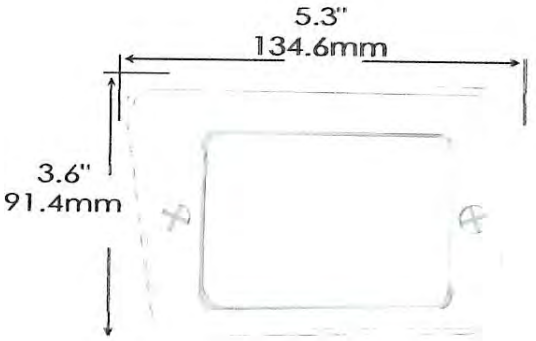

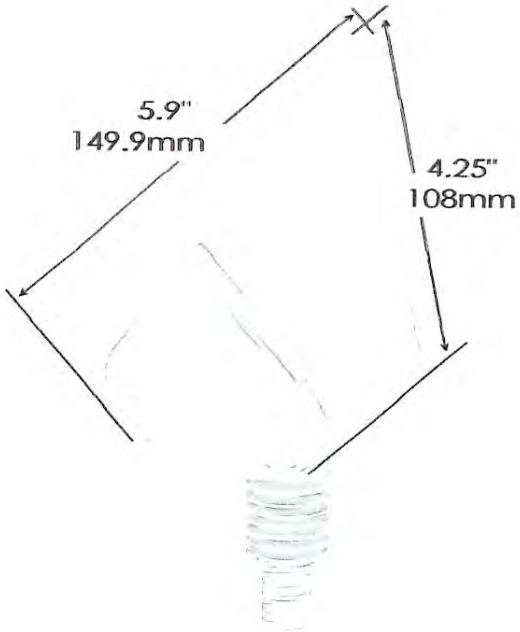

Dauer Manufacturing • 10100 NW 116th Way #14 • Medley, FL 33178
(800) 883-2590 • Fax (305) 594-9308 • www.DauerLampen.com • info@DauerLampen.com

SPECIFICATION SHEET Page 2
MODEL: 490010 "Diplomat" LED MR16/Bi-Pin Wall Wash Fixture

LED LAMP SPECIFICATIONS

LAMP TYPES:
Dauer MR16 UL-listed (E353116) 12V lamp suitable for enclosed luminaires, or Dauer IP65 outdoor-rated SMD or encapsulated bi-pin, all with 5-year warranty.

OPTICS:
MR16 integral optics providing available beam spreads from 15° to 100°. No optics for SMD or encapsulated bi-pin lamps.

COLOR TEMPERATURES:
Color temperature options provide the following qualities: 2800K and 3000K=warm white; 4000K=neutral white; 5000K and 6000K=cool white. Decorative color light options include amber, blue, green, and red.

FIXTURE ORDERING INFORMATION
To order a lamped fixture with mounting options, select the appropriate choice from each column as in the following example:

EXAMPLES: 490010-5W-MR16-40-2700K-MS-R2
490010-2W-E-6000K-M3-R12

FIXTURE	LAMP			MOUNTING		RISER	
490010	TYPE	BEAM SPREAD	COLOR TEMP.	MS	Composite stake (incl.) 490029	R2	2" brass riser 490038
	2W-MR16	25° / 40° / 60° / 100°	2700K / 3000K	M3	3-prong tri-stake 490030	R3	3" brass riser 490039
	4W-MR16	25° / 40° / 60° / 100°	2700K / 3000K	MY	Y-bracket surface mount 490045	R6	6" brass riser 490031
	5W-MR16	15° / 25° / 40° / 60° / 100°	2700K / 3000K	MG	Brass gutter mount 490047	R12	12" brass riser 490032
		25°	Amber / Blue / Green / Red	MR	Round 3-hole surface mount 490048	R24	24" brass riser 490033
	6W-MR16	25° / 40° / 60°	2700K / 3000K	MP	PVC mounting stake 490037		
	7W-MR16	25° / 40°	2700K / 3000K / 4000K / 5000K				
		60°	2700K / 3000K				
	2W-E (encapsulated bi-pin)		2800K / 6000K				
	3W-E (encapsulated bi-pin)		2800K				
	3.3W-S (SMD bi-pin)		Amber / Blue / Green / Red				
	4W-S (SMD bi-pin)		2800K				
	5W-S (SMD bi-pin)		2800K				

Dauer Manufacturing • 10100 NW 116th Way #14 • Medley, FL 33178
(800) 883-2590 • Fax (305) 594-9308 • www.DauerLampen.com • info@DauerLampen.com

LANDSCAPE LIGHTING BY
LIGHTSCAPES
"NAPLES"

Your specialist in distinctive landscape lighting
Design & Installation

239-595-2656

16000 Old 41 Road, Ste 205, Naples, FL 34110

Area(s) PIER

SOLID BRASS LED

Date AUG 19, 2019
Name PASEO COMMUNITY DEV. DISTRICT
Address 9530 MARKETPLACE RD.
Phone 239-936-0913

QUANTITY	ITEM	DESCRIPTION/FUNCTION
30	CRESCENT DECK LIGHTS MOUNTED	
	APPROXIMATELY EVERY 10 FT OF DECK LENGTH.	
	ALL WIRE + CONNECTIONS WILL BE INSIDE OF	
	CONDUIT, MOUNTED ON THE OUTSIDE UPPER	
	RAIL OF DECK FENCE	
1	TRANSFORMER	
	POWER WILL BE ACCESSED FROM COMMUNITY	
	OWNED STREETLIGHT W/ TRANSFORMER + POWER	
	OUTLET LOCATED IN BUSHES JUST WEST	
	OF PIER ENTRY POINT.	
		$11,100.-

Service Call $75 + $50 per man hour & materials
Pre-season Yearly Service: We reposition lights knocked askance, trim vegetation covering lights & make your lighting new like the first day we installed them $300 .....
(Any Fixtures destroyed by others additional cost)

Lic. #ES12000887

Owner's Signature

Notes: Owner to supply electric necessary. Workmanship & fixtures guaranteed for life. LED light bulbs (2 YRS.) Timers one year.

LandscapeLightingByLightscapes.com • ken@lightscapesinc.com

PIER: 30 EA 'CRESCENT' DECK LIGHT FIXTURES ⊗

MOUNTED UNDER HAND RAIL EVERY 10 FT ALONG ENTIRE LENGTH OF RAILING.

NOT EXACT TO SCALE. ALL CONNECTIONS WILL BE IN CONDUIT ON OUTSIDES OF RAILINGS.

Dauer Lampen

SPECIFICATION SHEET

Type: DECK LIGHTS

Model: 'CRESCENT' DECK FIXTURE

Project: PASEO 'PIER'

MODEL: 490075 "Crescent" LED Bi-Pin Deck Light Fixture

SPECIFICATIONS

HOUSING:
Cast brass with weathered brass finish. Frosted glass lens.

SOCKET/LAMP HOLDER:
One fixed ceramic bi-pin socket accepts a bi-pin lamp with G4 or GY6.35 base.

LAMP TYPE:
12V SMD or encapsulated bi-pin. 35W maximum. See Dauer lamp ordering information on back page.

WIRING:
Prewired with 5' pigtail of 18/2 cable.

WARRANTY:
Lifetime.

The Crescent cast brass deck light features a unidirectional "eyelid" with a frosted glass lens.

DIMENSIONS:

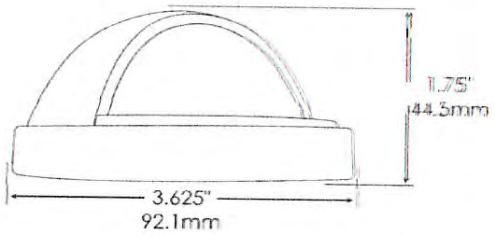

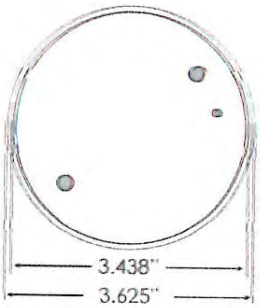

Dauer Manufacturing • 10100 NW 116th Way #14 • Medley, FL 33178
(800) 883-2590 • Fax (305) 594-9308 • www.DauerLampen.com • info@DauerLampen.com

MODEL: 490075 "Crescent" LED Bi-Pin Deck Light Fixture

LED LAMP SPECIFICATIONS

LAMP TYPE:
One Dauer IP65 outdoor-rated SMD or encapsulated bi-pin with 5-year warranty.

COLOR TEMPERATURES:
2800K warm white or 6000K cool white. Decorative light options include blue, green, and turtle-safe amber and red.

FIXTURE ORDERING INFORMATION
To order a lamped fixture, select the appropriate choice from each column as in the following example:

EXAMPLE: 490075-2W-E-2800K

FIXTURE	LAMP			
490075	WATTAGE	TYPE		COLOR TEMP.
	2W	E	Encapsulated bi-pin	2800K / 6000K
	2.2W	S	SMD bi-pin	2800K
	3W	E	Encapsulated bi-pin	2800K / 6000K
	3.3W	S	SMD bi-pin	2800K / Amber / Blue / Green / Red

Dauer Manufacturing • 10100 NW 116th Way #14 • Medley, FL 33178
(800) 883-2590 • Fax (305) 594-9308 • www.DauerLampen.com • info@DauerLampen.com

LANDSCAPE LIGHTING BY
LIGHTSCAPES
"NAPLES"

Your specialist in distinctive landscape lighting
Design & Installation

239-595-2656

16000 Old 41 Road, Ste 205, Naples, FL 34110

Date AUG 19, 2019

Area(s) BRIDGE. WALKWAYS + PALMS, EAST + WEST SIDES, SOUTH OF BRIDGE

SOLID BRASS LED

Name PASEO COMMUNITY DEV DISTRICT

Address 9530 MARKETPLACE RD

Phone 239-936-0913

QUANTITY	ITEM	DESCRIPTION/FUNCTION
40	MRH UPLIGHTS (ASTOR)	ON BOTH SIDES
	OF WALKWAYS. 15 EACH	BISMARK PALMS
	EAST + WEST. 10 TOTAL	ON PALMS EAST +
	WEST.	
12	MINI PATH LIGHTS ON WALKWAY ALONG BOTH	
	EAST + WEST.	
3	TRANSFORMERS AS NEEDED.	
	POTENTIAL FOR A FEW UPLIGHTS TO BE POSITIONED	
	ON SMALL CENTER ISLAND NORTH OF INTERSECTION	
	OF PASEO GRANDE BLVD + PASEO DRIVE	
		$14,400.-

Service Call $75 + $50 per man hour & materials

Pre-season Yearly Service: We reposition lights knocked askance, trim vegetation covering lights & make your lighting new like the first day we installed them $300 .....

(Any Fixtures destroyed by others additional cost)

Lic. #ES12000887

Owner's Signature

Notes: Owner to supply electric necessary. Workmanship & fixtures guaranteed for life. LED light bulbs (2 YRS.) Timers one year.

LandscapeLightingByLightscapes.com • ken@lightscapesinc.com

SOUTH OF BRIDGE: EAST AND WEST SIDES. LIGHTING PALMS + WALKWAYS

EAST: ~20 UPLIGHTS + 6 MINI PATH LIGHTS

WEST: ~20 UPLIGHTS + 6 MINI PATH LIGHTS

ISLAND: IF POSSIBLE, MAY LIGHT A FEW PALMS HERE.

Dauer Lampen

SPECIFICATION SHEET

Type: MR4 UPLIGHT

Model: 'ASTOR' UPLIGHT FIXTURE

Project: PASEO, SOUTH OF BRIDGE

MODEL: 490007 "Astor" LED MR16 Uplight Fixture

SPECIFICATIONS

HOUSING:
Cast brass with weathered brass finish. Lock-and-load shroud with double O-rings.

SOCKET/LAMP HOLDER:
One fixed ceramic bi-pin socket with stainless steel retaining springs.

LENS:
Clear tempered glass convex lens.

LAMP TYPE:
12V MR16. LED recommended. 35W maximum. See Dauer lamp ordering information on back page.

MOUNTING:
Stem threaded with 1/2" NPT. Heavy-duty composite stake included. May be mounted into threaded hubs in junction boxes or mounting accessories shown on back page.

WIRING:
Prewired with 5' pigtail of 18/2 cable.

WARRANTY:
Lifetime.

INTERTEK ETL LISTED US
4009739

The sleek Astor uplight features a tempered glass convex lens that illuminates foliage and outdoor scenery with soft, mellow light. Crafted from cast brass with a weathered finish. Brass-knobbed swivel for creative directionality. A "lock-and-load" shroud features double O-rings for long-lasting protection. Mounting options are plentiful, such as the heavy-duty composite stake, which is included. Dozens of MR16 LED lamp choices are ideal for every application.

DIMENSIONS:

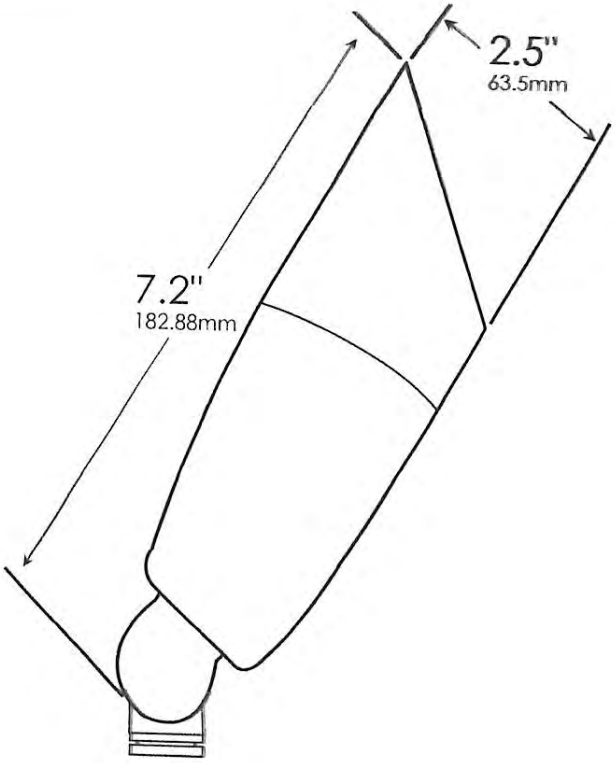

Dauer Manufacturing • 10100 NW 116th Way #14 • Medley, FL 33178
(800) 883-2590 • Fax (305) 594-9308 • www.DauerLampen.com • info@DauerLampen.com

MODEL: 490007 "Astor" LED MR16 Uplight Fixture

LED LAMP SPECIFICATIONS

LAMP TYPE:
Dauer MR16 UL-listed (E353116) 12V lamp with 5-year warranty, dimmable, and suitable for enclosed luminaires.

OPTICS:
Integral optics providing available beam spreads from 15° to 60°.

COLOR TEMPERATURES:
Color temperature options provide the following qualities: 2700K=ultra-warm; 3000K=warm white; 4000K=neutral white; 5000K=cool white. Decorative color light options include amber, blue, green, and red.

FIXTURE ORDERING INFORMATION
To order a lamped fixture with mounting options, select the appropriate choice from each column as in the following example:

EXAMPLE: 490007-5W-40-2700K-MS-R2

FIXTURE	LAMP			MOUNTING		RISER	
490007	WATTAGE	BEAM SPREAD	COLOR TEMP.	**MS**	Composite stake (incl.) 490029	**R2**	2" brass riser 490038
	2W	25° / 40° / 60°°	2700K / 3000K	**M3**	3-prong tri-stake 490030	**R3**	3" brass riser 490039
	4W	25° / 40° / 60°	2700K / 3000K	**MY**	Y-bracket surface mount 490045	**R6**	6" brass riser 490031
	5W	15° / 25° / 40° / 60°	2700K / 3000K	**MG**	Brass gutter mount 490047	**R12**	12" brass riser 490032
		25°	Amber / Blue / Green / Red	**MR**	Round 3-hole surface mount 490048	**R24**	24" brass riser 490033
	6W	25° / 40° / 60°	2700K / 3000K	**MP**	PVC mounting stake 490037		
	7W	25° / 40°	2700K / 3000K / 4000K / 5000K				
		60°	2700K / 3000K				

Dauer Manufacturing • 10100 NW 116th Way #14 • Medley, FL 33178
(800) 883-2590 • Fax (305) 594-9308 • www.DauerLampen.com • info@DauerLampen.com

Dauer Lampen™

SPECIFICATION SHEET

Type: MINI PATH LIGHTS

Model: 'METROPOLITAN'

Project: PASEO, SOUTH OF BRIDGE

MODEL: 490009 "Metropolitan" LED Bi-Pin Wall Wash Fixture

SPECIFICATIONS

HOUSING:
Cast brass with weathered brass finish. Angled shroud with gasketed lens.

SOCKET/LAMP HOLDER:
One fixed ceramic bi-pin socket accepts bi-pin lamps with G4 and GY6.35 bases.

LENS:
Clear and frosted tempered glass lenses included.

LAMP TYPE:
12V SMD or encapsulated bi-pin. 35W maximum. See Dauer lamp ordering information on back page.

MOUNTING:
Stem threaded with 1/2" NPT. Heavy-duty composite stake included. May be mounted into threaded hubs in junction boxes or mounting accessories shown on back page.

WIRING:
Prewired with 5' pigtail of 18/2 cable.

WARRANTY:
Lifetime.

The Metropolitan mini wall wash comes with clear and frosted glass lenses. The lens is gasketed into an angled shroud. Crafted from cast brass. A heavy-duty composite stake is included, and other mounting options are available. Tilt angle adjusts securely with a brass knob. Can be used for accenting building and barrier walls, as well as for lighting landscape features from below. A variety of LED bi-pin lamp intensities and hues are available.

DIMENSIONS:

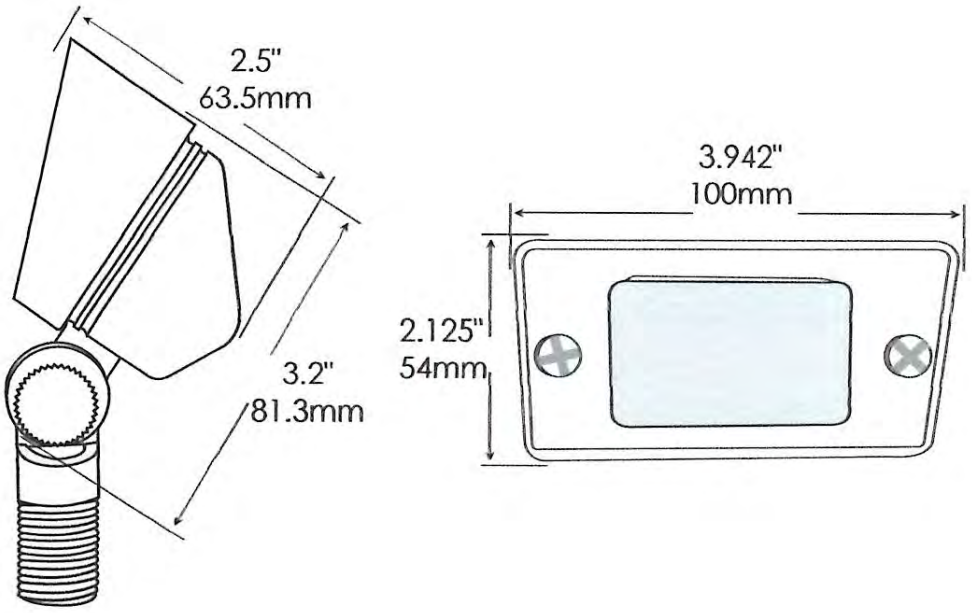

Dauer Manufacturing • 10100 NW 116th Way #14 • Medley, FL 33178
(800) 883-2590 • Fax (305) 594-9308 • www.DauerLampen.com • info@DauerLampen.com

MODEL: 490009 "Metropolitan" LED Bi-Pin Wall Wash Fixture

LED LAMP SPECIFICATIONS

LAMP TYPE:
Dauer IP65 outdoor-rated SMD or encapsulated bi-pin with 5-year warranty.

COLOR TEMPERATURES:
2800K warm white or 6000K cool white. Decorative color light options include amber, blue, green, and red.

FIXTURE ORDERING INFORMATION
To order a lamped fixture with mounting options, select the appropriate choice from each column as in the following example:

EXAMPLE: 490009-4W-S-2800K-MS-R2

FIXTURE	LAMP				MOUNTING		RISER	
490009	WATTAGE	TYPE		COLOR TEMP.	MS	Composite stake (incl.) 490029	R2	2" brass riser 490038
	2W	E	Encapsulated bi-pin	2800K / 6000K	M3	3-prong tri-stake 490030	R3	3" brass riser 490039
	2.2W	S	SMD bi-pin	2800K	MY	Y-bracket surface mount 490045	R6	6" brass riser 490031
	3W	E	Encapsulated bi-pin	2800K / 6000K	MG	Brass gutter mount 490047	R12	12" brass riser 490032
	3.3W	S	SMD bi-pin	2800K / Amber / Blue / Green / Red	MR	Round 3-hole surface mount 490048	R24	24" brass riser 490033
	4W	E S	Encapsulated bi-pin/ SMD bi-pin	2800K				
	5W	S	SMD bi-pin	2800K				

Dauer Manufacturing • 10100 NW 116th Way #14 • Medley, FL 33178
(800) 883-2590 • Fax (305) 594-9308 • www.DauerLampen.com • info@DauerLampen.com

LANDSCAPE LIGHTING BY
LIGHTSCAPES
"NAPLES"

Your specialist in distinctive landscape lighting
Design & Installation

239-595-2656
16000 Old 41 Road, Ste 205, Naples, FL 34110

Date AUG 19, 2019

Area(s) PASEO FENCE LINE, EAST + WEST OF MAIN ENTRANCE

Name PASEO COMMUNITY DEV. DISTRICT
Address 9530 MARKETPLACE RD
Phone 239-936-0913

QUANTITY	ITEM	DESCRIPTION/FUNCTION
150	UPLIGHT FIXTURES ('ASTORS' + BIG BOX	
	'DIPLOMATS') FOCUSED ON CLUSTERS	
	OF PALMS + TREES ON EACH SIDE OF	
	THE MAIN GATE, OUTWARD EAST + WEST	
	ALONG PENZANCE. THE EAST SIDE HAS	
	POWER ALREADY ESTABLISHED. WE WILL CREATE	
	7-8 CLUSTERS OF ILLUMINATED PALMS +	
	TREES ON THE EAST SIDE, LEAVING GAPS OF UN-LIT	
	SPACE. THIS WILL PROVIDE DRAMA WHILE OPTIMIZING	
	FIXTURE COUNT	ETC
	WE WILL ESTABLISH POWER ON THE WEST SIDE TO	
	MIRROR THE EAST SIDE LIGHT EFFECT.	
8-10	TRANSFORMERS.	
		$33,200.-

Service Call $75 + $50 per man hour & materials
Pre-season Yearly Service: We reposition lights knocked askance, trim vegetation covering lights & make your lighting new like the first day we installed them $300 .....
(Any Fixtures destroyed by others additional cost)

Lic. #ES12000887

Owner's Signature

Notes: Owner to supply electric necessary. Workmanship & fixtures guaranteed for life. LED light bulbs (2 YRS.) Timers one year.

LandscapeLightingByLightscapes.com • ken@lightscapesinc.com

PASEO FENCELINE, EAST : 75 UPLIGHT FIXTURES

7-8 CLUSTERS OF ILLUMINATED PALMS/TREES/FLOWERING BUSHES TO CREATE DRAMA + EXTEND LENGTH OF AREA TO BE LIT WITH FEWER FIXTURES.

ESTIMATED LIGHT CLUSTERS.
NEW TRANSFORMERS. EXISTING POWER OUTLETS.

PASEO FENCELINE WEST: 75 UPLIGHT FIXTURES

7-8 CLUSTERS OF ILLUMINATED PALMS/TREES/FLOWERING BUSHES TO CREATE DRAMA + EXTEND LENGTH OF AREA TO BE LIT WITH FEWER FIXTURES

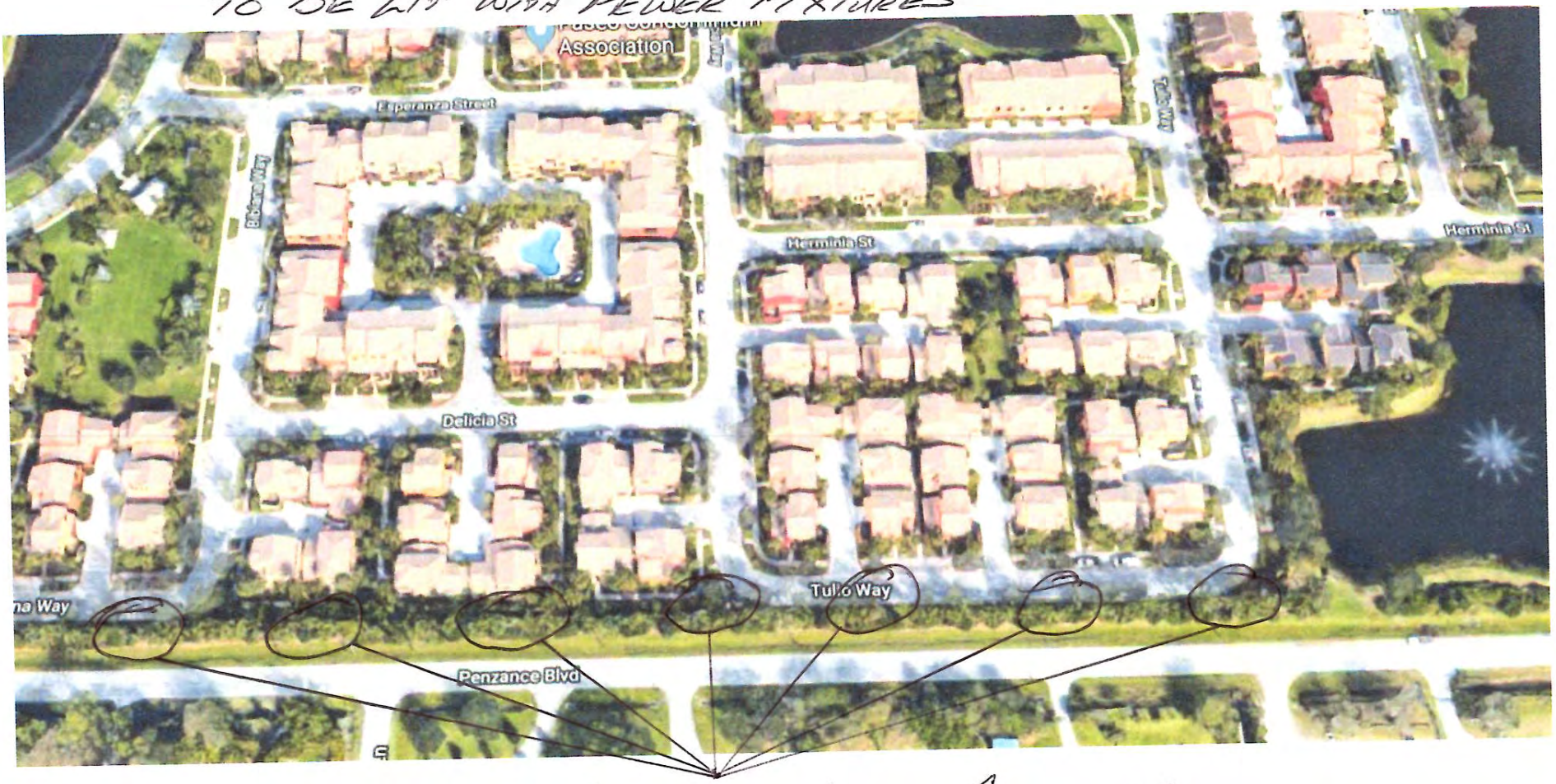

ESTIMATED LIGHT CLUSTERS.
NEW TRANSFORMERS. NEW POWER OUTLETS PULLED FROM STREET LIGHTS.

Dauer Lampen

SPECIFICATION SHEET

Type: UPLIGHTS

Model: 'ASTOR' UPLIGHT FIXTURE

Project: PASEO FENCE LINE

MODEL: 490007 "Astor" LED MR16 Uplight Fixture

INTERTEK ETL LISTED US

4009739

SPECIFICATIONS

HOUSING:
Cast brass with weathered brass finish. Lock-and-load shroud with double O-rings.

SOCKET/LAMP HOLDER:
One fixed ceramic bi-pin socket with stainless steel retaining springs.

LENS:
Clear tempered glass convex lens.

LAMP TYPE:
12V MR16. LED recommended. 35W maximum. See Dauer lamp ordering information on back page.

MOUNTING:
Stem threaded with 1/2" NPT. Heavy-duty composite stake included. May be mounted into threaded hubs in junction boxes or mounting accessories shown on back page.

WIRING:
Prewired with 5' pigtail of 18/2 cable.

WARRANTY:
Lifetime.

The sleek Astor uplight features a tempered glass convex lens that illuminates foliage and outdoor scenery with soft, mellow light. Crafted from cast brass with a weathered finish. Brass-knobbed swivel for creative directionality. A "lock-and-load" shroud features double O-rings for long-lasting protection. Mounting options are plentiful, such as the heavy-duty composite stake, which is included. Dozens of MR16 LED lamp choices are ideal for every application.

DIMENSIONS:

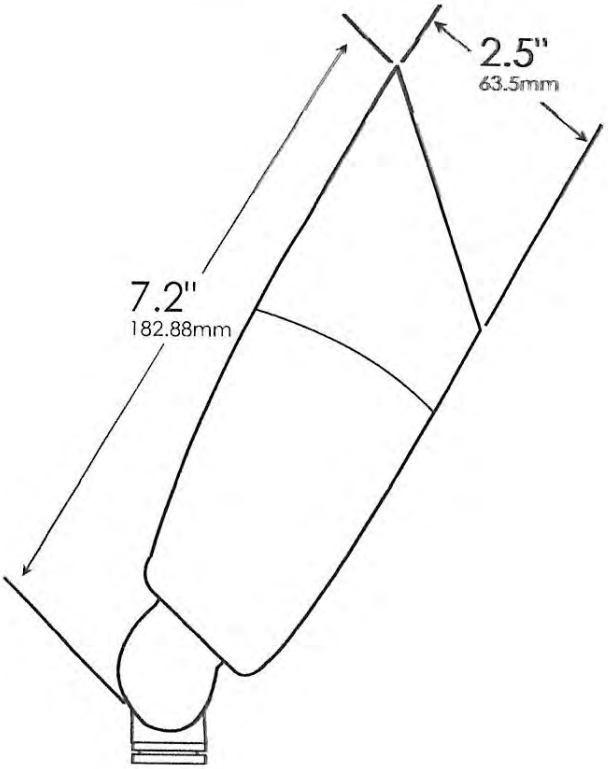

Dauer Manufacturing • 10100 NW 116th Way #14 • Medley, FL 33178
(800) 883-2590 • Fax (305) 594-9308 • www.DauerLampen.com • info@DauerLampen.com

MODEL: 490007 "Astor" LED MR16 Uplight Fixture

LED LAMP SPECIFICATIONS

LAMP TYPE:
Dauer MR16 UL-listed (E353116) 12V lamp with 5-year warranty, dimmable, and suitable for enclosed luminaires.

OPTICS:
Integral optics providing available beam spreads from 15° to 60°.

COLOR TEMPERATURES:
Color temperature options provide the following qualities: 2700K=ultra-warm; 3000K=warm white; 4000K=neutral white; 5000K=cool white. Decorative color light options include amber, blue, green, and red.

FIXTURE ORDERING INFORMATION
To order a lamped fixture with mounting options, select the appropriate choice from each column as in the following example:

EXAMPLE: 490007-5W-40-2700K-MS-R2

FIXTURE	LAMP			MOUNTING		RISER	
490007	WATTAGE	BEAM SPREAD	COLOR TEMP.	MS	Composite stake (incl.) 490029	R2	2" brass riser 490038
	2W	25° / 40° / 60°°	2700K / 3000K	M3	3-prong tri-stake 490030	R3	3" brass riser 490039
	4W	25° / 40° / 60°	2700K / 3000K	MY	Y-bracket surface mount 490045	R6	6" brass riser 490031
	5W	15° / 25° / 40° / 60°	2700K / 3000K	MG	Brass gutter mount 490047	R12	12" brass riser 490032
		25°	Amber / Blue / Green / Red	MR	Round 3-hole surface mount 490048	R24	24" brass riser 490033
	6W	25° / 40° / 60°	2700K / 3000K	MP	PVC mounting stake 490037		
	7W	25° / 40°	2700K / 3000K / 4000K / 5000K				
		60°	2700K / 3000K				

Dauer Manufacturing • 10100 NW 116th Way #14 • Medley, FL 33178
(800) 883-2590 • Fax (305) 594-9308 • www.DauerLampen.com • info@DauerLampen.com

Dauer Lampen™

SPECIFICATION SHEET

Type: UPLIGHTS

Model: 'DIPLOMAT' FIXTURE

Project: PASEO FENCE LINE

MODEL: 490010 "Diplomat" LED MR16/Bi-Pin Wall Wash Fixture

SPECIFICATIONS

HOUSING:
Cast brass with weathered brass finish. Angled shroud with gasketed lens.

SOCKET/LAMP HOLDER:
One fixed ceramic bi-pin socket accepts MR16 with GU5.3 base or bi-pin lamps with G4 and GY6.35 bases.

LENS:
Clear and frosted tempered glass lenses included.

LAMP TYPE:
12V SMD or encapsulated bi-pin or MR16. 35W maximum. See Dauer lamp ordering information on back page.

MOUNTING:
Stem threaded with 1/2" NPT. Heavy-duty composite stake included. May be mounted into threaded hubs in junction boxes or mounting accessories shown on back page.

WIRING:
Prewired with 5' pigtail of 18/2 cable.

WARRANTY:
Lifetime.

The cast brass Diplomat large wall wash casts a very broad and even light on surfaces and scenery. Choose between the included clear and frosted lens options. Dozens of bi-pin lamp options maximize your creative expression for wall washing applications, or install an MR16 LED lamp if you desire a longer throw or narrower, more directional beam-spread options ranging from 15° to 100°. Heavy-duty stake included.

DIMENSIONS:

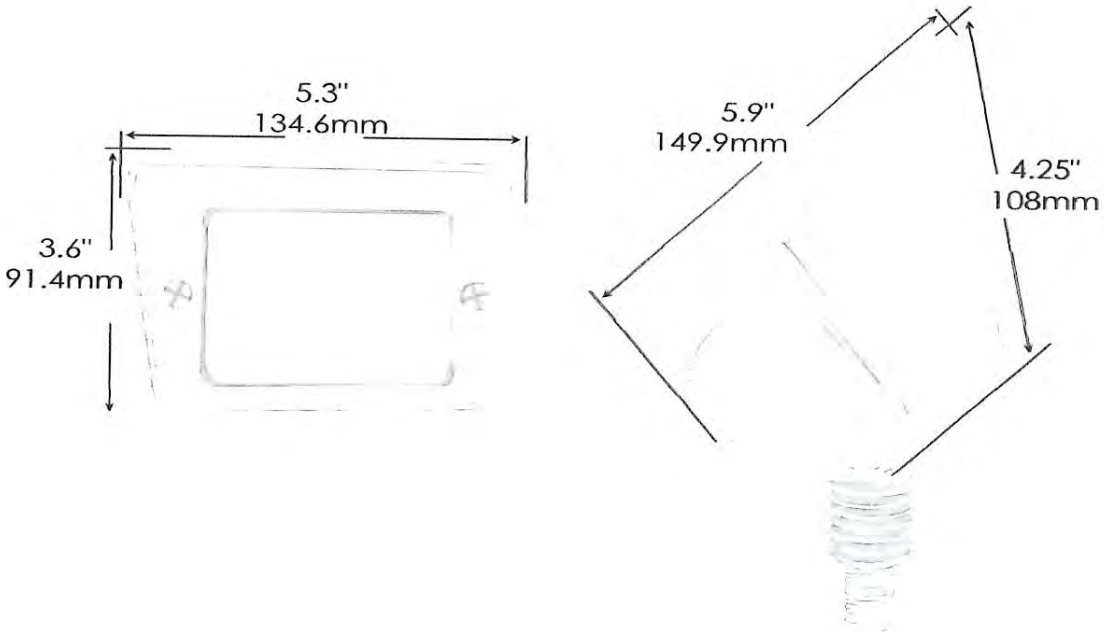

Dauer Manufacturing • 10100 NW 116th Way #14 • Medley, FL 33178
(800) 883-2590 • Fax (305) 594-9308 • www.DauerLampen.com • info@DauerLampen.com

MODEL: 490010 "Diplomat" LED MR16/Bi-Pin Wall Wash Fixture

LED LAMP SPECIFICATIONS

LAMP TYPES:
Dauer MR16 UL-listed (E353116) 12V lamp suitable for enclosed luminaires, or Dauer IP65 outdoor-rated SMD or encapsulated bi-pin, all with 5-year warranty.

OPTICS:
MR16 integral optics providing available beam spreads from 15° to 100°. No optics for SMD or encapsulated bi-pin lamps.

COLOR TEMPERATURES:
Color temperature options provide the following qualities: 2800K and 3000K=warm white; 4000K=neutral white; 5000K and 6000K=cool white. Decorative color light options include amber, blue, green, and red.

FIXTURE ORDERING INFORMATION
To order a lamped fixture with mounting options, select the appropriate choice from each column as in the following example:

EXAMPLES: 490010-5W-MR16-40-2700K-MS-R2
490010-2W-E-6000K-M3-R12

FIXTURE	LAMP			MOUNTING		RISER	
490010	TYPE	BEAM SPREAD	COLOR TEMP.	MS	Composite stake (incl.) 490029	R2	2" brass riser 490038
	2W-MR16	25° / 40° / 60° / 100°	2700K / 3000K	M3	3-prong tri-stake 490030	R3	3" brass riser 490039
	4W-MR16	25° / 40° / 60° / 100°	2700K / 3000K	MY	Y-bracket surface mount 490045	R6	6" brass riser 490031
	5W-MR16	15° / 25° / 40° / 60° / 100°	2700K / 3000K	MG	Brass gutter mount 490047	R12	12" brass riser 490032
		25°	Amber / Blue / Green / Red	MR	Round 3-hole surface mount 490048	R24	24" brass riser 490033
	6W-MR16	25° / 40° / 60°	2700K / 3000K	MP	PVC mounting stake 490037		
	7W-MR16	25° / 40°	2700K / 3000K / 4000K / 5000K				
		60°	2700K / 3000K				
	2W-E (encapsulated bi-pin)		2800K / 6000K				
	3W-E (encapsulated bi-pin)		2800K				
	3.3W-S (SMD bi-pin)		Amber / Blue / Green / Red				
	4W-S (SMD bi-pin)		2800K				
	5W-S (SMD bi-pin)		2800K				

Dauer Manufacturing • 10100 NW 116th Way #14 • Medley, FL 33178
(800) 883-2590 • Fax (305) 594-9308 • www.DauerLampen.com • info@DauerLampen.com

LIGHTSCAPES

DISTINCTIVE LANDSCAPE LIGHTING

16000 Old 41 Road, Ste 205
Naples, FL 34110

LLC. ES12000887

PRICE PROPOSAL SUMMARY:

PASEO FRONT ENTRANCE	$35,380.
GAZEBOS (4 TOTAL)	$14,900.
TRAFFIC CIRCLE (2 TOTAL)	$ 3,750.
PIER	$11,100
SOUTH OF BRIDGE	$14,400.
PASEO FENCE LINE, EAST & WEST	$33,200.
PROJECT TOTAL	$112,770.

Ken Robertson 239-595-2656

Email: ken@lightscapesinc.com • Web: Landscapelightingbylightscapes.com

LIGHTSCAPES

DISTINCTIVE LANDSCAPE LIGHTING

16000 Old 41 Road, Ste 205
Naples, FL 34110

LLC. ES12000887

REFERENCES:

1. LIVINGSTON LAKES Naples. Walkways, palms, parks. 37 buildings (Carriage, Coach and Garden Homes). Ezio Traunera, Board Member, Owner. Lead on Lighting Project. Ezio.livingstonlakes@gmail.com. (647) 260-0876

2. BONITA BEACH CLUB Condominiums, Bonita Springs. Large Interior courtyard of community. John Swan, Board President, Owner. Lead on Lighting Project. Bandjswan@gmail.com. (710) 312-2865

3. HERITAGE BAY, Veranda Condo Association. 21 buildings. Uplights, walkways, general landscape lighting features (in progress). Lou Kenyan, President, Heritage Bay Veranda Association. (508) 685-6008. Danielle Farese, Cambridge Property Management. daniellef@cambridgeswfl.com

Ken Robertson 239-595-2656

Email: ken@lightscapesinc.com • Web: Landscapelightingbylightscapes.com

Estimate #: QB4770
Created: 6/12/19

NiteLites of Southwest Florida
6900-29 Daniels Parkway Unit 324
Ft. Myers, FL 33912

Rep: karl.meisenzahl@nitelites.com

Paseo/ Steve Brown

Project	Terms	Install Date
	Due on receipt	

Product	Description	Spec	Price	Quantity	Total
NITE-800	Covers Labor, Cable, Wire Connection and all other Misc. Parts per Transformer		$400.00	11.00	$4,400.00
NITE-004	Spot Light - Aged Brass	Link	$199.70	324.00	$64,702.80
NITE-009 STEM LED	18 Stem for IPS with New 3.6W LED Design included - Aged Brass		$193.60	4.00	$774.40
NITE-009 TIER	Tier Design Hat Only for IPS - Aged Brass	Link	$90.80	4.00	$363.20
NITE-046	Commercial Grade Micro Spread Light - Aged Brass	Link	$217.80	22.00	$4,791.60
NITE-048	Commercial Grade Spread Light - Aged Brass	Link	$290.40	10.00	$2,904.00
NITE-085	Eyebrow Surface Mount Deck Light with 1W LED - Aged Brass	Link	$157.30	23.00	$3,617.90
NITE-124A	Commercial Stake	Link	$48.40	10.00	$484.00
NITE-206	Quick Install Photo Cell		$66.00	24.00	$1,584.00
SOP	36 brass bollard		$600.00	17.00	$10,200.00
NITE-427	21LED, 12V, Warm White Bulb		$54.50	23.00	$1,253.50
NITE-429BR5W	5W MR-16 COB WARM WHITE, BRIGHT LED		$54.50	311.00	$16,949.50
NITE-434	4W Multiple Chip LED Module		$163.40	22.00	$3,594.80
NITE-435	11W Multiple Chip LED Module for Commercial Spread Light		$193.60	10.00	$1,936.00
NITE-446WW	E26 Base 10.5W LED in Warm White with Clear Lens, 12V		$96.80	17.00	$1,645.60

NITE-521	12 Riser - Aged Brass	Link	$38.80	4.00	$155.20
NITE-522	18 Riser - Aged Brass	Link	$48.40	3.00	$145.20
NITE-523	24 Riser - Aged Brass	Link	$58.10	32.00	$1,859.20
NITE-614	300 Watt Stainless Steel Transformer	Link	$395.00	24.00	$9,480.00
NITE-429BR	Color changing Led MR-16 with WiFi		$225.00	13.00	$2,925.00
AL	All line voltage work, including new 120volt lines, and new outlets where needed. This price is subject to change pending any unforeseen obstacles during installation.		$10,000.00	1.00	$10,000.00

NOTES:	Subtotal:	$143,765.90
	Tax:	$0.00
	Discount:	$0.00
	Total:	**$143,765.90**

NiteLites Legal Notice

- CAUTION: KEEP MULCH, PINE STRAW, AND ANY OTHER COMBUSTIBLE MATERIALS FROM COVERING THE FIXTURES.
- Warranty information can be found on our website www.nitelites.com.
- Warranty does not cover Acts of God or Insured Perils, which are losses normally covered by an insurance policy.
- NiteLites Limit of Liability for any loss shall be limited to the actual loss or the cost of the lighting system installed, whichever is less.
- Some jobs will require electrical work in excess of our capability, the expense of the aforementioned work will be the responsibility of the property owner.

Paseo/ Steve Brown

CLIENT ACCEPTANCE

Client accepts this estimate as presented and agrees to be bound by NiteLites Terms & Conditions. This estimate is subject to acceptance by the NiteLites home office. Any modifications to this estimate must be in writing.

THANK YOU FOR YOUR BUSINESS

Tab 7

CONTRACT FOR PROFESSIONAL TECHNOLOGY SERVICES

DATE: August 28, 2019

BETWEEN: **RIZZETTA TECHNOLOGY SERVICES, LLC.**
3434 Colwell Avenue
Suite 200
Tampa, Florida 33614

(Hereinafter referred to as "**Consultant**")

AND: **PASEO COMMUNITY DEVELOPMENT DISTRICT**
9530 Marketplace Road Suite 206
Ft. Myers, Florida 33912

(Hereinafter referred to as "**District**," and together with Consultant, the "**Parties**.")

PURPOSE; SCOPE OF SERVICES:

I. The purpose of this contract for technology services (hereinafter referred to as "**Contract**") is for the Consultant to provide professional technology services to the District pursuant to Chapter 189.069, Florida Statutes. A brief description of these services is provided below, and a detailed description is provided in **Exhibit A** to this Contract.

A. ONE-TIME SERVICES. The Consultant shall provide the following One-Time Services to the District pursuant to this Contract:

i. **Website Development** - Consultant shall provide all required content to a third party responsible for design and implementation of a website for the District to comply with Florida law, including, but not limited to, Chapter 189.069, Florida Statutes, requiring that special districts operate and maintain an official internet website. Details of the required content are shown in **Exhibit A**. Consultant shall secure and register a domain name in the District's name, which the domain shall be owned by the District, for purposes of establishing the website.

ii. **E-mail Set-up** - Consultant shall establish and register a domain name in the District's name for purposes of setting up and creating individual e-mail addresses for supervisors, staff or employees as designated by the District. Said domain name shall be owned by the District.

B. **STANDARD ON-GOING SERVICES**. The Consultant shall provide the following Standard On-Going Services on a monthly basis to the District pursuant to this Contract:

i. **Website Compliance and Management** - Consultant shall be responsible for ensuring District's on-going compliance with Florida law, including, but not limited to, Chapter 189.069, Florida Statutes, requiring that special districts operate and maintain an official internet web site throughout the term of this Contract. Consultant shall maintain the domain for the District. Consultant will manage the website maintenance contract provider and ensure they are meeting the requirements of the contract with the District. Consultant will provide the website maintenance provider with documents and updated content as required in accordance with Chapter 189.0069 Florida Statutes.

ii. **E-mail** - Consultant shall provide services including ongoing management of e-mail accounts, hosting and backup in compliance with all applicable laws, including public records law and public records retention.

II. **ADDITIONAL SERVICES**. In addition to the One-Time and Standard On-Going Services described above, or in any addendum executed between the Parties, the District may, from time to time, require additional services from the Consultant. Any services not specifically provided for in the scope of services above as well as any changes in the scope requested by the District, will be considered additional services. If any additional services are required or requested, the Consultant will provide a detailed description of these services and fees for such services to the District for approval prior to beginning any additional services. The Consultant shall undertake the additional services after the District has issued its written approval of the description and fees for such services to the Consultant.

III. **LITIGATION SUPPORT SERVICES.** Upon the District's request, the Consultant shall prepare documentation in response to litigation requests and provide necessary expert testimony in connection with litigation involving the subject matter of this Contract. If the District requires or requests any litigation support services, the Consultant will provide a detailed description of the services and fees for such services to the District for approval prior to beginning any litigation support services. The Consultant shall undertake the litigation support services after the

District has issued its written approval of the description and fees for such services to the Consultant.

IV. TERM. The Consultant's services as provided in this Contract shall commence upon execution of this Contract. This Contract shall automatically renew annually unless terminated pursuant to its terms. The Consultant may change the prices only with the District's written consent.

V. FEES AND EXPENSES; PAYMENT TERMS.

A. FEES AND EXPENSES.

i. A schedule of fees for the services described in Sections I, II, and III of this Contract is shown in **Exhibit B** to this Contract, which is attached hereto and incorporated herein. The District shall pay the Consultant for the services provided under the terms of this Contract in accordance with the schedule of fees in **Exhibit B**. For purposes of the Consultant's compensation for services provided pursuant to this Contract, the District shall compensate the Consultant only for those services provided under the terms of this Contract. Unless otherwise specified by this Contract, the Consultant will invoice the District for the Consultant's services in advance of each month and in the amounts set forth in **Exhibit B**. The fees for those services which are not being requested at the time this Contract is approved will be provided to the District at such time as those services are required. Payment shall be made by the District within thirty (30) days of receipt of a correctly submitted invoice.

ii. Fees for the Standard On-Going Services described in this Contract may be negotiated annually by the Parties. Any amendment to Standard On-Going Services fees must comply with the amendment procedure in this Contract and must be reflected in the adopted General Fund Budget of the District. The District's adoption of the General Fund Budget shall not constitute the District's consent for payment of any expenses.

iii. In the event the District authorizes a change in the scope of services requested, Consultant shall submit, in writing to the District, a request for a fee amendment corresponding to the change in services being requested, if it has not already done so. Any change in the scope of requested services and the corresponding fee amendment shall comply with the amendment procedure in this Contract. Such amendment must be validly executed by the Parties before Consultant is authorized to begin providing services pursuant to the change in scope and the revised fees are adopted.

iv. For the purposes of this Contract, an out-of-pocket expense is an expense that the Consultant or one of its subcontractors, if applicable, incurs during the performance of the Standard On-Going Services, as provided in this Contract. Such out-of-pocket expenses are included in the fees shown in **Exhibit B**. Out-of-pocket expenses incurred in connection with the performance of Additional Services and Litigation Support Services will be subject to reimbursement at cost. These expenses include, but are not limited to, airfare, mileage, transportation/parking, lodging, postage and copies.

v. Fees for services to be billed on an hourly basis will be billed at the Consultant's current hourly rates at the time of the execution of this Contract, as set forth in **Exhibit B**. The hourly rate for the services may be amended from time to time pursuant to the amendment procedure in this Contract and in advance of such proposed change. Consultant's current hourly rates are shown in **Exhibit B** to this Contract. Any proposed change shall indicate the new hourly fee for such services.

B. PAYMENT TERMS.

i. One-Time Services. One-Time Services will be billed at fixed fee pursuant to the schedule shown in **Exhibit B**.

ii. Standard On-Going Services. Standard On-Going Services will be billed monthly at a fixed fee pursuant to the schedule shown in **Exhibit B**.

iii. Additional Services. Additional Services will be billed monthly on an hourly basis for the hours incurred at the Consultant's current hourly rate as shown in **Exhibit B**.

iv. Litigation Support Services. Litigation Support Services will be billed monthly on an hourly basis for the hours incurred at the Consultant's current hourly rate as shown in **Exhibit B**.

v. Out-of-Pocket expenses. Out-of-Pocket expenses of the Consultant will be billed monthly as incurred.

All invoices will be due and payable thirty (30) days from the date of invoice pursuant to the Prompt Payment Act, Chapter 218.70 Florida Statutes.

VI. SUSPENSION OF SERVICES FOR NON-PAYMENT. The Consultant shall have the right to suspend services being provided as outlined in this Contract if the District fails to pay Consultant's invoices in a timely manner, which shall be construed as thirty (30) days from date of the invoice or as otherwise provided by

the Prompt Payment Act, Section 218.70 Florida Statutes. Consultant shall notify the District, in writing, at least ten (10) days prior to suspending services.

VII. **NON-CONTINGENCY.** The payment of fees and expenses, as outlined in this Contract, are not contingent upon any circumstance not specifically outlined in this Contract.

VIII. **AMENDMENT.** Amendments to, and waivers of, the provisions contained in this Contract may be made only by an instrument in writing that is executed by both the District and the Consultant.

IX. **RESPONSIBILITIES.**

A. **DISTRICT RESPONSIBILITIES.** The District shall provide for the timely services of its legal counsel, engineer, and any other consultants, contractors, or employees, as required, for the Consultant to perform the duties outlined in this Contract. Expenses incurred in providing this support shall be the sole responsibility of the District unless specified herein.

B. **LIMITATIONS OF RESPONSIBILITIES.** To the extent not referenced herein, Consultant shall not be responsible for the acts or omissions of any other contractor, subcontractor, supplier, or of any other individual or entity performing services that are not under the control of the Consultant or its own employees, contractors, subcontractors, agents or related entities. Consultant shall not be liable for any damage that occurs from Acts of God, which are defined as those caused by windstorm, hail, fire, flood, hurricane, freezing, or other similar occurrences of nature.

X. **TERMINATION.** This Contract may be terminated as follows:

A. By the District for "good cause" immediately which shall include misfeasance, malfeasance, nonfeasance, or dereliction of duties by the Consultant. Termination for “good cause” shall be affected by written notice to Consultant at the address noted herein.

B. By the Consultant for “good cause”, immediately which shall include, but is not limited to, failure of the District to timely pay Consultant for services rendered in accordance with the terms set forth in this Contract, malfeasance, nonfeasance, or dereliction of duties by the District, or upon request or demand by the Board, or any member thereof, for Consultant to undertake any action or implement a policy of the Board which Consultant deems unethical, unlawful, or in contradiction of any applicable federal, state, or municipal law or rule. Termination for “good cause” shall be affected by written notice to District at the address noted herein.

C. By the Consultant or District, for any reason, upon provision of a minimum of sixty (60) days written notice of termination to the address noted herein.

D. Upon any termination, Consultant will be entitled to the total amount of compensation pursuant to the terms of this Contract, through the termination date, but subject to any offsets that the District may have for services not performed. Consultant will make all reasonable effort to provide for an orderly transfer of the domain(s), e-mails, books and records of the District to the District or its designee. Upon termination, the District will continue to own the domain name, e-mail accounts and e-mail and website content.

XI. GENERAL TERMS AND CONDITIONS.

A. All invoices are due and payable within thirty (30) days of invoice date, or as otherwise provided by the Florida Prompt Payment Act, Section 218.70. Florida Statutes. Invoices not paid within thirty (30) days of presentation shall be charged interest on the balance due at the maximum legally permissible rate.

B. In the event either party is required to take any action to enforce this Contract, the prevailing party shall be entitled to attorney's fees and costs, including fees and costs incurred in determining entitlement to and reasonableness of such fees and costs.

C. This Contract shall be interpreted in accordance with and shall be governed by the laws of the State of Florida. Venue for all proceedings shall be in Lee County, Florida.

E. In the event that any provision of this Contract shall be determined to be unenforceable or invalid by a Court of Law, such unenforceability or invalidity shall not affect the remaining provisions of the Contract which shall remain in full force and effect.

D. The rights and obligations of the District as defined by this Contract shall inure to the benefit of and shall be binding upon the successors and assigns of the District. There shall be no assignment of this Contract by the Consultant.

E. The Consultant and its officers, supervisors, staff, and employees shall use due care to protect the property of the District, its residents, and landowners from damage. The Consultant agrees to take steps to repair any damage resulting from the Consultant's activities and work pursuant to the Contract within twenty-four hours (24) hours.

F. Dissolution or court declared invalidity of the District shall not relieve the District of compensation due for services theretofore rendered.

XII. INDEMNIFICATION.

A. **DISTRICT INDEMNIFICATION.** To the extent allowable under applicable law (and only to the extent of the limitations of liability set forth in Section 768.28, Florida Statutes), and except and to the extent caused by the negligence, reckless and/or willful misconduct of the Consultant or persons or entities within Consultants control and direction, the District agrees to indemnify and hold harmless the Consultant and its officers, supervisors, staff, and employees from and against any and all liability, claims, actions, suits, demands, assessments or judgments asserted and any and all losses, liabilities, damages, costs, court costs, and expenses, including attorney's fees, that Consultant may hereafter incur, become responsible for, or be caused to pay out arising out of or relating to the negligent or intentionally wrongful acts or omissions of the District that relates to the subject matter of this Contract. The indemnification provided for herein shall not be deemed exclusive of any other rights to which the Consultant may be entitled and shall continue after the Consultant has ceased to be engaged under this Contract.

CONSULTANT INDEMNIFICATION. The Consultant agrees to indemnify, defend, and hold harmless the District and its officers, supervisors, staff, and employees from and against any and all liability, claims, actions, suits, demands, assessments or judgments asserted and any and all losses, liabilities, damages, costs, court costs, and expenses, including attorney's fees, that the District may hereafter incur, become responsible for, or be caused to pay out arising out of or relating to the negligent, reckless, and/or intentionally wrongful acts or omissions of the Consultant. The indemnification provided for herein shall not be deemed exclusive of any other rights to which the District may be entitled and shall continue after the Consultant has ceased to be engaged under this Contract.

B. **SOVEREIGN IMMUNITY**; **INDEMNIFICATION OBLIGATIONS**. Nothing herein shall be construed to limit the District's sovereign immunity limitations of liability as provided in Section 768.28, Florida Statutes, or other applicable law. Indemnification obligations under this Contract shall include the payment of all settlements, judgments, damages, liquidated damages, penalties, forfeitures, back pay awards, court costs, arbitration and/or mediation costs, litigation expenses, attorney fees, and paralegal fees (incurred in court, out of court, on appeal, or in bankruptcy proceedings) as ordered.

XIII. INSURANCE.

A. The District shall provide and maintain Public Official Liability and General Liability insurance policies, each in an amount not less than One Million Dollars ($1,000,000.00) throughout the term of this Contract.

B. The Consultant shall provide and maintain the following levels of insurance coverage at all times throughout the term of this Contract:

i. Worker's Compensation Insurance in accordance with the laws of the State of Florida.

ii. General Liability Insurance with the limit of One Million Dollars ($1,000,000.00) per each occurrence.

iii. Professional Liability Insurance with limit of no less than One Million Dollars ($1,000,000.00) per each occurrence.

iv. Employment Practices Liability Insurance with limit of Two Million Dollars ($2,000,000.00) per each occurrence.

v. Comprehensive Automobile Liability Insurance for all vehicles used by the Consultant's staff, whether owned or hired, with a combined single limit of One Million Dollars ($1,000,000.00).

C. Except with respect to Professional Liability and Worker's Compensation insurance policies, the District and its officers, supervisors, staff, and employees will be listed as additional insureds on each insurance policy described above. None of the policies above may be canceled during the term of this Contract (or otherwise cause the District to not be named as an additional insured where applicable) without thirty (30) days written notice to the District. Consultant will furnish the District with a Certificate of Insurance evidencing compliance with this section upon request. Insurance should be from a reputable insurance carrier, licensed to conduct business in the State of Florida.

D. If the Consultant fails to secure or maintain the required insurance, the District has the right (without any obligation to do so, however) to secure such required insurance, in which event the Consultant shall pay the cost for that required insurance and shall furnish, upon demand, all information that may be required in connection with the District's obtaining the required insurance.

XIV. ASSIGNMENT. Except as provided in this section, neither the District nor the Consultant may assign this Contract or any monies to become due hereunder without the prior written approval of the other. Any assignment attempted to be

made by the Consultant or the District without the prior written approval of the other party is void.

XV. COMPLIANCE WITH PUBLIC RECORDS LAWS. Consultant understands and agrees that all documents of any kind provided to the District in connection with this Contract may be public records, and, accordingly, Consultant agrees to comply with all applicable provisions of Florida law in handling such records, including but not limited to Section 119.0701, Florida Statutes. Consultant acknowledges that the designated public records custodian for the District is Rizzetta & Company, Inc. ("Public Records Custodian"). Among other requirements and to the extent applicable by law, the Consultant shall 1) keep and maintain public records required by the District to perform the service; 2) upon request by the Public Records Custodian, provide the District with the requested public records or allow the records to be inspected or copied within a reasonable time period at a cost that does not exceed the cost provided in Chapter 119, Florida Statutes; 3) ensure that public records which are exempt or confidential and exempt from public records disclosure requirements, are not disclosed except as authorized by law for the duration of the contract term and following the contract term if the Consultant does not transfer the records to the Public Records Custodian of the District; and 4) upon completion of the Contract, transfer to the District, at no cost, all public records in Consultant's possession or, alternatively, keep, maintain and meet all applicable requirements for retaining public records pursuant to Florida laws. When such public records are transferred by the Consultant, the Consultant shall destroy any duplicate public records that are exempt or confidential and exempt from public records disclosure requirements. All records stored electronically must be provided to the District in a format that is compatible with Microsoft Word or Adobe PDF formats.

IF THE CONSULTANT HAS QUESTIONS REGARDING THE APPLICATION OF CHAPTER 119, FLORIDA STATUTES, TO THE CONSULTANT'S DUTY TO PROVIDE PUBLIC RECORDS RELATING TO THIS CONTRACT, CONTACT THE CUSTODIAN OF PUBLIC RECORDS AT (813) 514-0400, OR BY EMAIL AT INFO@RIZZETTA.COM, OR BY REGULAR MAIL AT 3434 COLWELL AVENUE, SUITE 200, TAMPA, FLORIDA 33614.

XVI. NOTICES. All notices, requests, consents and other communications under this Contract ("**Notices**") shall be in writing and shall be delivered, mailed by First Class Mail, postage prepaid, or overnight delivery service, to the parties, as follows:

If to the District: Paseo Community Development District
9530 Marketplace Road Suite 206
Ft. Myers, Florida 33912
Attn: District Manager

With a copy to: Latham, Shuker, Eden & Beaudine LLP
111 N. Magnolia Ave, Suite 1400
Orlando, FL 32801
Attn: District Counsel

If to the Consultant: Rizzetta Technology Services, LLC.
3434 Colwell Avenue, Suite 200
Tampa, Florida 33614

Except as otherwise provided in this Contract, any Notice shall be deemed received only upon actual delivery at the address set forth above. Notices delivered after 5:00 p.m. (at the place of delivery) or on a non-business day, shall be deemed received on the next business day. If any time for giving Notice contained in this Contract would otherwise expire on a non-business day, the Notice period shall be extended to the next succeeding business day. Saturdays, Sundays, and legal holidays recognized by the United States Government shall not be regarded as business days. Counsel for the District and counsel for the Consultant may deliver Notice on behalf of the District and the Consultant, respectively. Any party or other person to whom Notices are to be sent or copied may notify the other parties and addressees of any change in name or address to which Notices shall be sent by providing the same on five (5) days written notice to the parties and addressees set forth herein.

XVII. EFFECTIVE DATE. This Contract shall become effective upon execution by both the District and the Consultant and shall remain effective until terminated by either the District or the Consultant in accordance with the provisions of this Contract.

XVIII. HEADINGS FOR CONVENIENCE ONLY. The descriptive headings in this Contract are for convenience only and shall neither control nor affect the meaning or construction of any of the provisions of this Contract.

XIX. AGREEMENT; CONFLICTS. This instrument, together with accompanying **Exhibit A**, shall constitute the final and complete expression of this Contract between the District and the Consultant relating to the subject matter of this Contract. To the extent of any conflict between this instrument and **Exhibit A**, this instrument shall control.

XX. DEFAULT AND PROTECTION AGAINST THIRD PARTY INTERFERENCE. A default by either the District or the Consultant under this Contract shall entitle the other to all remedies available at law or in equity, which may include, but not be limited to, the right of damages, injunctive relief, and/or specific performance. The District shall be solely responsible for enforcing its rights under this Contract against any interfering third party. Nothing contained in this Contract shall limit or impair the District's right to protect its rights from interference by a third party to this Contract.

XXI. THIRD PARTY BENEFICIARIES. This Contract is solely for the benefit of the District and the Consultant and no right or cause of action shall accrue upon or by reason, to or for the benefit of any third party not a formal party to this Contract. Nothing in this Contract, express or implied, is intended or shall be construed to confer upon any person or corporation other than the District and the Consultant any right, remedy, or claim under or by reason of this Contract or any of the provisions or conditions of this Contract; and all of the provisions, representations, covenants, and conditions contained in this Contract shall inure to the sole benefit of and shall be binding upon the District and the Consultant and their respective representatives, successors, and assigns.

XXII. COMPLIANCE WITH GOVERNMENTAL REGULATION. The Consultant shall keep, observe, and perform all requirements of applicable local, State, and Federal laws, rules, regulations, and ordinances. If the Consultant fails to notify the District in writing within five (5) days of the receipt of any notice, order, required to comply notice, or a report of a violation or an alleged violation, made by a local, State, or Federal governmental body or agency or subdivision thereof with respect to the services being rendered under this Contract or any action of the Consultant or any of its agents, servants, employees, or materialmen, or with respect to terms, wages, hours, conditions of employment, safety appliances, or any other requirements applicable to provision of services, or fails to comply with any requirement of such agency within five (5) days after receipt of any such notice, order, request to comply notice, or report of a violation of an alleged violation, the District may terminate this Contract, such termination to be effective immediately upon the giving of notice of termination.

XXIII. ARM'S LENGTH TRANSACTION. This Contract has been negotiated fully between the District and the Consultant as an arm's length transaction. The District and the Consultant participated fully in the preparation of this Contract with the assistance of their respective counsel. In the case of a dispute concerning the interpretation of any provision of this Contract, the Parties are deemed to have drafted, chosen, and selected the language, and any doubtful language will not be interpreted or construed against any party.

XXIV. COUNTERPARTS. This Contract may be executed in any number of counterparts, each of which when executed and delivered shall be an original; however, all such counterparts together shall constitute, but one and the same instrument.

Therefore, the Consultant and the District each intend to enter this Contract, understand the terms set forth herein, and hereby agree to those terms.

ACCEPTED BY:

RIZZETTA TECHNOLOGY SERVICES, LLC.

BY: _____

PRINTED NAME: William J. Rizzetta

TITLE: Managing Member

DATE: _____

WITNESS: _____
Signature

_____
Print Name

PASEO COMMUNITY DEVELOPMENT DISTRICT

BY: _____

PRINTED NAME: _____

TITLE: _____

DATE: _____

ATTEST:

_____
Secretary/Assistant Secretary
Board of Supervisors

_____
Print Name

Exhibit A – Scope of Services
Exhibit B – Schedule of Fees

EXHIBIT A
Scope of Services

ONE-TIME SERVICES: The Consultant shall provide the following One-Time Services to the District pursuant to this Contract.

Website Development - Consultant shall provide all required content to a third party responsible for design and implementation of a website for the District to comply with Florida law, including, but not limited to, Chapter 189.069, Florida Statutes, requiring that special districts operate and maintain an official internet website. Details of the required content are shown in **Exhibit A**. Consultant shall secure and register a domain name in the District's name, which the domain shall be owned by the District, for purposes of establishing the website.

E-mail Set-up - Consultant shall establish and register a domain name in the District's name for purposes of setting up and creating individual e-mail addresses for supervisors, staff or employees as designated by the District. Said domain name shall be owned by the District.

STANDARD ON-GOING SERVICES: The Consultant shall provide the following Standard On-Going Services to the District pursuant to this Contract:

1. **Website Compliance and Management** - Consultant shall be responsible for ensuring District's on-going compliance with Florida law, including, but not limited to, Chapter 189.069, Florida Statutes, requiring that special districts operate and maintain an official internet web site throughout the term of this Contract. Consultant shall maintain the domain for the District. Consultant will manage the website maintenance contract provider and ensure they are meeting the requirements of the contract with the District. Consultant will provide the website maintenance provider with documents and updated content as required in accordance with Chapter 189.0069 Florida Statutes.

2. **E-mail** - Consultant shall provide services including ongoing management of e-mail accounts, hosting and backup in compliance with all applicable laws, including public records law and public records retention.

REQUIRED WEB SITE CONTENT: Pursuant to section 189.016 & 189.069, Florida Statutes, special district web sites will be required to include and make available the following information or documents, which requirements may be changed from time to time and which Consultant shall be responsible for ensuring District compliance associated therewith. Changes to the requirements may be subject to additional fees:

1. The full legal name of the special district.
2. The public purpose of the special district.
3. The name, official address, official e-mail address, and, if applicable, term and

appointing authority for each member of the governing body of the special district.
4. The fiscal year of the special district.
5. The full text of the special district's charter, the date of establishment, the establishing entity, and the statute or statutes under which the special district operates, if different from the statute or statutes under which the special district was established. Community development districts may reference chapter 190 as the uniform charter but must include information relating to any grant of special powers.
6. The mailing address, e-mail address, telephone number, and website uniform resource locator of the special district.
7. A description of the boundaries or service area of, and the services provided by, the special district.
8. A listing of all taxes, fees, assessments, or charges imposed and collected by the special district, including the rates or amounts for the fiscal year and the statutory authority for the levy of the tax, fee, assessment, or charge. For purposes of this subparagraph, charges do not include patient charges by a hospital or other health care provider.
9. The primary contact information for the special district for purposes of communication from the department.
10. A code of ethics adopted by the special district, if applicable, and a hyperlink to generally applicable ethics provisions.
11. The budget of the special district and any amendments thereto in accordance with s. 189.016.
12. Tentative budgets must be posted at least two (2) days before the budget hearing and now remain on District websites for forty-five (45) days.
13. Final adopted budgets must be posted within thirty (30) days after adoption and now remain on District websites for two (2) years.
14. Budget amendments must be posted within five (5) days after adoption and now remain on District websites for two (2) years.
15. The final, complete audit report for the most recent completed fiscal year and audit reports required by law or authorized by the governing body of the special district.
16. A listing of its regularly scheduled public meetings as required by s. 189.015(1).
17. The public facilities report, if applicable.
18. The link to the Department of Financial Services' website as set forth in s. 218.32(1)(g).
19. At least seven (7) days before each meeting or workshop, the agenda of the event, along with any meeting materials available in an electronic format, excluding confidential and exempt information. The information must remain on the website for at least one (1) year after the event.

LITIGATION SUPPORT SERVICES: Prepare documentation in response to litigation requests and provide necessary expert testimony in connection with litigation involving District issues.

EXHIBIT B
Schedule of Fees

One-Time Services will be billed at a fee pursuant to the following schedule:

Website Development:	Yes____	No____	$ 750.00
Email Set-up:	Yes____	No____	$ 500.00
Total One-Time Services:			**$_____**

Standard On-Going Services will be billed in advance monthly pursuant to the following schedule:

		MONTHLY
Website Compliance and Management:		$ 100.00
Email (50 GB per user) at $15.00 per month per account:		
Board Supervisor Account	_____ X $15.00	$_____
Onsite Staff Account	_____ X $15.00	$_____
Miscellaneous Account	_____ X $15.00	$_____
Total Standard On-Going Services:		**$_____**

ADDITIONAL AND LITIGATION SUPPORT SERVICES:

Additional and Litigation Support Services will be billed hourly pursuant to the current hourly rates shown below:

JOB TITLE:	HOURLY RATE:
Managing Partner	$300.00
Chief Financial Officer	$250.00
Director	$225.00
Regional District Manager	$200.00
Financial Services Manager	$200.00
Accounting Manager	$200.00
Regional Licensed Community Association Manager	$200.00
Systems Administrator	$200.00
District Manager	$175.00
Licensed Community Association Manager	$175.00
Amenity Services Manager	$175.00
Manager, Field Services	$175.00
Clubhouse Manager	$175.00
Senior Field Services Manager	$150.00
Senior Accountant	$150.00
Field Services Manager	$125.00
Community Association Coordinator	$100.00
Financial Associate	$100.00
Staff Accountant	$100.00
Accounting Clerk	$ 85.00
Administrative Assistant	$ 85.00

Tab 8

Rizzetta & Company

Paseo
Community Development District

www.paseocdd.org

Approved Proposed Budget for Fiscal Year 2019/2020

Presented by: Rizzetta & Company, Inc.

9530 Marketplace Road
Suite 206
Fort Myers, Florida 33912
Phone: 239-936-0913

www.rizzetta.com

Table of Contents

	Page
General Fund Budget Account Category Descriptions	3
General Fund Reserve Budget Account Category Descriptions	7
Debt Service Fund Budget Account Category Descriptions	8
General Fund Budget for Fiscal Year 2019/2020	9
Reserve Fund for Fiscal Year 2019/2020	11
Debt Service Fund Budget for Fiscal Year 2019/2020	12
Assessments Charts for Fiscal Year 2019/2020	13-14

GENERAL FUND BUDGET
ACCOUNT CATEGORY DESCRIPTION

The General Fund Budget Account Category Descriptions are subject to change at any time depending on its application to the District. Please note, not all General Fund Budget Account Category Descriptions are applicable to the District indicated above. Uses of the descriptions contained herein are intended for general reference.

REVENUES:

Interest Earnings: The District may earn interest on its monies in the various operating accounts.

Tax Roll: The District levies Non-Ad Valorem Special Assessments on all of the assessable property within the District to pay for operating expenditures incurred during the Fiscal Year. The assessments may be collected in two ways. The first is by placing them on the County's Tax Roll, to be collected with the County's Annual Property Tax Billing. This method is only available to land properly platted within the time limits prescribed by the County.

Off Roll: For lands not on the tax roll and that is by way of a direct bill from the District to the appropriate property owner.

Miscellaneous Revenues: The District may receive monies for the sale or provision of electronic access cards, entry decals etc.

EXPENDITURES – ADMINISTRATIVE:

Supervisor Fees: The District may compensate its supervisors within the appropriate statutory limits of $200.00 maximum per meeting within an annual cap of $4,800.00 per supervisor.

Administrative Services: The District will incur expenditures for the day to today operation of District matters. These services include support for the District Management function, recording and preparation of meeting minutes, records retention and maintenance in accordance with Chapter 119, Florida Statutes, and the District's adopted Rules of Procedure, preparation and delivery of agenda, overnight deliveries, facsimiles and phone calls.

District Management: The District as required by statute, will contract with a firm to provide for management and administration of the District's day to day needs. These services include the conducting of board meetings, workshops, overall administration of District functions, all required state and local filings, preparation of annual budget, purchasing, risk management, preparing various resolutions and all other secretarial duties requested by the District throughout the year is also reflected in this amount.

District Engineer: The District's engineer provides general engineering services to the District. Among these services are attendance at and preparation for monthly board meetings, review of construction invoices and all other engineering services requested by the district throughout the year.

Disclosure Report: The District is required to file quarterly and annual disclosure reports, as required in the District's Trust Indenture, with the specified repositories. This is contracted out to a third party in compliance with the Trust Indenture.

Trustee's Fees: The District will incur annual trustee's fees upon the issuance of bonds for the oversight of the various accounts relating to the bond issues.

Assessment Roll: The District will contract with a firm to maintain the assessment roll and annually levy a Non-Ad Valorem assessment for operating and debt service expenses.

Financial & Revenue Collections: Services include all functions necessary for the timely billing and collection and reporting of District assessments in order to ensure adequate funds to meet the District's debt service and operations and maintenance obligations. These services include, but are not limited to, assessment roll preparation and certification, direct billings and funding request processing as well as responding to property owner questions regarding District assessments. This line item also includes the fees incurred for a Collection Agent to collect the funds for the principal and interest payment for its short-term bond issues and any other bond related collection needs. These funds are collected as prescribed in the Trust Indenture. The Collection Agent also provides for the release of liens on property after the full collection of bond debt levied on particular properties.

Accounting Services: Services include the preparation and delivery of the District's financial statements in accordance with Governmental Accounting Standards, accounts payable and accounts receivable functions, asset tracking, investment tracking, capital program administration and requisition processing, filing of annual reports required by the State of Florida and monitoring of trust account activity.

Auditing Services: The District is required annually to conduct an audit of its financial records by an Independent Certified Public Accounting firm, once it reaches certain revenue and expenditure levels, or has issued bonds and incurred debt.

Arbitrage Rebate Calculation: The District is required to calculate the interest earned from bond proceeds each year pursuant to the Internal Revenue Code of 1986. The Rebate Analyst is required to verify that the District has not received earnings higher than the yield of the bonds.

Public Officials Liability Insurance: The District will incur expenditures for public officials' liability insurance for the Board and Staff.

Legal Advertising: The District will incur expenditures related to legal advertising. The items for which the District will advertise include, but are not limited to meeting schedules, special meeting notices, and public hearings, bidding etc. for the District based on statutory guidelines

Dues, Licenses & Fees: The District is required to pay an annual fee to the Department of Economic Opportunity, along with other items which may require licenses or permits, etc.

Miscellaneous Fees: The District could incur miscellaneous throughout the year, which may not fit into any standard categories.

Website Hosting, Maintenance and Email: The District may incur fees as they relate to the development and ongoing maintenance of its own website along with possible email services if requested.

District Counsel: The District's legal counsel provides general legal services to the District. Among these services are attendance at and preparation for monthly board meetings, review of operating and maintenance contracts and all other legal services requested by the district throughout the year.

EXPENDITURES - FIELD OPERATIONS:

Security Services and Patrols: The District may wish to contract with a private company to provide security for the District.

Electric Utility Services: The District will incur electric utility expenditures for general purposes such as irrigation timers, lift station pumps, fountains, etc.

Water-Sewer Utility Services: The District will incur water/sewer utility expenditures related to district operations.

Aquatic Maintenance: Expenses related to the care and maintenance of the lakes and ponds for the control of nuisance plant and algae species.

Fountain Service Repairs & Maintenance: The District may incur expenses related to maintaining the fountains within throughout the Parks & Recreational areas

Lake/Pond Bank Maintenance: The District may incur expenditures to maintain lake banks, etc. for the ponds and lakes within the District's boundaries, along with planting of beneficial aquatic plants, stocking of fish, mowing and landscaping of the banks as the District determines necessary.

Wetland Monitoring & Maintenance: The District may be required to provide for certain types of monitoring and maintenance activities for various wetlands and waterways by other governmental entities.

Mitigation Area Monitoring & Maintenance: The District may be required to provide for certain types of monitoring and maintenance activities for various mitigation areas by other governmental entities.

General Liability Insurance: The District will incur fees to insure items owned by the District for its general liability needs

Property Insurance: The District will incur fees to insure items owned by the District for its property needs

Landscape Maintenance: The District will incur expenditures to maintain the rights-of-way, median strips, recreational facilities including pond banks, entryways, and similar planting areas within the District. These services include but are not limited to monthly landscape maintenance, fertilizer, pesticides, annuals, mulch, and irrigation repairs.

Irrigation Maintenance: The District will incur expenditures related to the maintenance of the irrigation systems.

Irrigation Repairs: The District will incur expenditures related to repairs of the irrigation systems.

Landscape Replacement: Expenditures related to replacement of turf, trees, shrubs etc.

Field Services: The District may contract for field management services to provide landscape maintenance oversight.

Street/Parking Lot Sweeping: The District may incur expenses related to street sweeping for roadways it owns or are owned by another governmental entity, for which it elects to maintain.

Roadway Repair & Maintenance: Expenses related to the repair and maintenance of roadways owned by the District if any.

Maintenance & Repair: The District may incur expenses to maintain its recreation facilities.

Miscellaneous Contingency: Monies collected and allocated for expenses that the District could incur throughout the year, which may not fit into any standard categories.

RESERVE FUND BUDGET
ACCOUNT CATEGORY DESCRIPTION

The Reserve Fund Budget Account Category Descriptions are subject to change at any time depending on its application to the District. Please note, not all Reserve Fund Budget Account Category Descriptions are applicable to the District indicated above. Uses of the descriptions contained herein are intended for general reference.

REVENUES:

Tax Roll: The District levies Non-Ad Valorem Special Assessments on all of the assessable property within the District to pay for operating expenditures incurred during the Fiscal Year. The assessments may be collected in two ways. The first is by placing them on the County's Tax Roll, to be collected with the County's Annual Property Tax Billing. This method is only available to land properly platted within the time limits prescribed by the County.

Off Roll: For lands not on the tax roll and that is by way of a direct bill from the District to the appropriate property owner.

EXPENDITURES:

Capital Reserve: Monies collected and allocated for the future repair and replacement of various capital improvements such as club facilities, swimming pools, athletic courts, roads, etc.

Capital Outlay: Monies collected and allocated for various projects as they relate to public improvements.

DEBT SERVICE FUND BUDGET
ACCOUNT CATEGORY DESCRIPTION

The Debt Service Fund Budget Account Category Descriptions are subject to change at any time depending on its application to the District. Please note, not all Debt Service Fund Budget Account Category Descriptions are applicable to the District indicated above. Uses of the descriptions contained herein are intended for general reference.

REVENUES:

Special Assessments: The District may levy special assessments to repay the debt incurred by the sale of bonds to raise working capital for certain public improvements. The assessments may be collected in the same fashion as described in the Operations and Maintenance Assessments.

EXPENDITURES – ADMINISTRATIVE:

Bank Fees: The District may incur bank service charges during the year.

Debt Service Obligation: This would a combination of the principal and interest payment to satisfy the annual repayment of the bond issue debt.

Proposed Budget
Paseo Community Development District
General Fund
Fiscal Year 2019/2020

	Chart of Accounts Classification	Actual YTD through 07/31/19	Projected Annual Totals 2018/2019	Annual Budget for 2018/2019	Projected Budget variance for 2018/2019	Budget for 2019/2020	Budget Increase (Decrease) vs 2018/2019	Comments
1								
2	**REVENUES**							
3								
4	Interest Earnings							
5	Interest Earnings	$ 14,983	$ 17,980	$ -	$ 17,980	$ -	$ -	
6	Special Assessments							
7	Tax Roll*	$ 1,693,731	$ 1,693,731	$ 1,684,313	$ 9,418	$ 1,671,278	$ (13,035)	
8	Other Miscellaneous Revenues							
9	Miscellaneous Revenues	$ 11,213	$ 13,456	$ -	$ 13,456	$ -	$ -	
10								
11	**TOTAL REVENUES**	**$ 1,719,927**	**$ 1,725,166**	**$ 1,684,313**	**$ 40,853**	**$ 1,671,278**	**$ (13,035)**	
12								
13	Balance Forward from Prior Year	$ -	$ -		$ -	$ -	$ -	
14								
15	**TOTAL REVENUES AND BALANCE FORWARD**	**$ 1,719,927**	**$ 1,725,166**	**$ 1,684,313**	**$ 40,853**	**$ 1,671,278**	**$ (13,035)**	
16								
17	***Allocation of assessments between the Tax Roll and Off Roll are estimates only and subject to change prior to certification.***							
18								
19	**EXPENDITURES - ADMINISTRATIVE**							
20								
21	Legislative							
22	Supervisor Fees	$ 8,800	$ 10,560	$ 12,000	$ 1,440	$ 12,000	$ -	$ 200.00 per meeting per Supervisor for 12 meetings per year.
23	Financial & Administrative							
24	Administrative Services	$ 7,667	$ 9,200	$ 9,200	$ (0)	$ 9,200	$ -	No Increase for FY 2019-2020
25	District Management	$ 29,750	$ 35,700	$ 35,700	$ -	$ 36,810	$ 1,110	Increase of 2.80 %
26	District Engineer	$ 40,241	$ 48,289	$ 40,000	$ (8,289)	$ 40,000	$ -	
27	Disclosure Report	$ 5,000	$ 5,000	$ 5,000	$ -	$ 5,000	$ -	
28	Trustees Fees	$ 898	$ 898	$ 14,000	$ 13,102	$ 14,000	$ -	Trustees fees
29	Assessment Roll	$ 5,250	$ 5,250	$ 5,250	$ -	$ 5,250	$ -	
30	Financial & Revenue Collections	$ 4,375	$ 5,250	$ 5,250	$ -	$ 5,250	$ -	
31	Accounting Services	$ 19,100	$ 22,920	$ 22,920	$ -	$ 24,000	$ 1,080	Increase of 2.80 %
32	Auditing Services	$ 4,300	$ 4,300	$ 4,300	$ -	$ 4,300	$ -	
33	Arbitrage Rebate Calculation	$ 1,000	$ 1,000	$ 500	$ (500)	$ 1,000	$ 500	
34	Miscellaneous Mailings	$ -	$ -	$ 500	$ 500	$ 500	$ -	
35	Public Officials Liability Insurance	$ 3,250	$ 3,250	$ 3,757	$ 507	$ 3,413	$ (344)	As per Egis' estimate
36	Legal Advertising	$ 488	$ 586	$ 750	$ 164	$ 750	$ -	
37	Dues, Licenses & Fees	$ 175	$ 210	$ 175	$ (35)	$ 175	$ -	Department of Economic Opportunity Special District Filing Fee
38	Tax Collector /Property Appraiser Fees	$ 1,146	$ 1,146	$ 1,146	$ -	$ 1,146	$ -	Lee County Property Appraiser Fees $ 1.00 per parcel.
39	Website Hosting, Maintenance, Backup (and Email)	$ 1,900	$ 2,280	$ 2,280	$ -	$ 8,180	$ 5,900	6 email addresses at $ 15.00 each per month and Website Hosting @ $ 100.00 per month. Includes ADA Compliance website remediation.
40	Legal Counsel							
41	District Counsel	$ 16,253	$ 19,504	$ 47,000	$ 27,496	$ 47,000	$ -	
42								
43	**Administrative Subtotal**	**$ 149,593**	**$ 175,343**	**$ 209,728**	**$ 34,385**	**$ 217,974**	**$ 8,246**	
44								
45	**EXPENDITURES - FIELD OPERATIONS**							
46								
47	Security Operations							
48	Access System Transponders	$ 11,240	$ 13,488	$ 10,000	$ (3,488)	$ 6,000	$ (4,000)	
49	Guard & Gate Facility Maintenance	$ 6,295	$ 7,554	$ 3,980	$ (3,574)	$ 5,600	$ 1,620	Cypress Access Monthly Maintenance contract plus 10 hours of after hours service @ $ 75.00 each.
50	Guardhouse Maintenance	$ 2,862	$ 3,434	$ 3,180	$ (254)	$ 3,700	$ 520	Rodent Services $ 40.00 per month plus cleaning services $ 225.00 per month.
51	Misc. Operating Supplies	$ 469	$ 563	$ 2,000	$ 1,437	$ 2,000	$ -	Supplies needed for guardhouse toner, paper, etc.
52	Security Services and Patrols	$ 118,156	$ 141,787	$ 140,020	$ (1,767)	$ 140,020	$ (0)	Supervisor 40 hours a week @ $ 18.00 per hour and Officers at $ 15.21 per hour. Total of 168 hours per week. Cost includes holiday pay estimate.
53	Electric Utility Services				$ -			
54	Utility Entry Gate System	$ 9,874	$ 11,849	$ 12,476	$ 627	$ 12,300	$ (176)	Based on AVG Actual
55	Utility Trash Compactor	$ 290	$ 348	$ 326	$ (22)	$ 330	$ 4	Based on AVG Actual
56	Utility - Fountains	$ 54,226	$ 65,071	$ 67,395	$ 2,324	$ 65,000	$ (2,395)	Based on AVG Actual
57	Utility - Irrigation	$ 29,247	$ 35,096	$ 38,520	$ 3,424	$ 35,000	$ (3,520)	Based on AVG Actual
58	Street Lights	$ 18,495	$ 22,194	$ 33,170	$ 10,976	$ 33,400	$ 230	Based on AVG Actual
59	Garbage/Solid Waste Control Services							
60	Garbage - Compactor/Recycling	$ 48,858	$ 58,630	$ 49,500	$ (9,130)	$ 54,000	$ 4,500	Based on actual
61	Stormwater Control							
62	Fountain Service Repairs & Maintenance	$ 24,422	$ 24,422	$ 15,000	$ (9,422)	$ 25,000	$ 10,000	
63	Fountain Maintenance Contract	$ 10,816	$ 10,816	$ 10,676	$ (140)	$ 10,676	$ -	Quarterly Maintenance @ $ 1325 per quarter and monthly maintenance at $448.00 per month.
64	Aquatic Maintenance	$ 22,410	$ 26,892	$ 24,492	$ (2,400)	$ 36,252	$ 11,760	Solitude contract $ 3, 021.00 per month.
65	Water Use/Quality Monitoring	$ 16,238	$ 19,486	$ 19,840	$ 354	$ 19,840	$ -	Johson Engineer Water Use Permit/Monitoring and Reporting includes newly accepted pump station in Esperanza.
66	Lake/Pond Bank Maintenance	$ 207,298	$ 248,758	$ 45,000	$ (203,758)	$ 180,000	$ 135,000	Reduced expenses to be paid out of reserves
67	Preserve/Wetland Monitoring & Maintenance	$ 17,647	$ 21,176	$ 19,400	$ (1,776)	$ 35,300	$ 15,900	Earth Tech Environmental 2 events per year $ 9, 700.00 each. Includes Native Vegetation Trimming Once a year at $ 15, 400.00 plus Pasarella Fees for inspection.
68	Other Physical Environment							
69	General Liability Insurance	$ 3,750	$ 3,750	$ 4,125	$ 375	$ 3,938	$ (187)	As per Egis' estimate

Proposed Budget
Paseo Community Development District
General Fund
Fiscal Year 2019/2020

	Chart of Accounts Classification	Actual YTD through 07/31/19	Projected Annual Totals 2018/2019	Annual Budget for 2018/2019	Projected Budget variance for 2018/2019	Budget for 2019/2020	Budget Increase (Decrease) vs 2018/2019	Comments
70	Property Insurance	$ 16,197	$ 16,197	$ 17,373	$ 1,176	$ 17,007	$ (366)	As per Egis' estimate
71	Entry & Walls Maintenance	$ -	$ -	$ 8,000	$ 8,000	$ 8,000	$ -	
72	Landscape Maintenance	$ 237,933	$ 285,520	$ 300,336	$ 14,816	$ 300,300	$ (36)	As per Agreement with Pinnacle. Includes cost of servicing Pet Stations and all Esperanza CDD parcels.
73	Landscape Maintenance Add Services	$ 5,358	$ 5,358	$ -	$ (5,358)	$ -	$ -	
74	Ornamental Lighting & Maintenance	$ -	$ -	$ -	$ -	$ -	$ -	
75	Holiday Decorations	$ 7,000	$ 7,000	$ 7,000	$ -	$ 7,000	$ -	Trimmers Holiday Lighting
76	Reserve Study	$ -	$ -	$ 2,500	$ 2,500	$ 2,500	$ -	Reserve Study Update
77	Irrigation Repairs	$ 21,926	$ 26,311	$ 30,000	$ 3,689	$ 30,000	$ -	Est.
78	Landscape - Mulch	$ 94,061	$ 112,873	$ 95,400	$ (17,473)	$ 97,210	$ 1,810	Includes Pine Straw and Mulch
79	Landscape Replacement Plants, Shrubs, Trees	$ 21,467	$ 25,760	$ 20,000	$ (5,760)	$ 30,000	$ 10,000	
80	Landscape - Annual Flower Replacement	$ 12,074	$ 14,489	$ 10,230	$ (4,259)	$ 15,000	$ 4,770	
81	Landscape Pest Control	$ 4,940	$ 5,928	$ 24,640	$ 18,712	$ 24,640	$ -	OTC Injections as per Pinnacle bid for 435 Palms.
82	Field Services	$ 8,050	$ 9,660	$ 8,400	$ (1,260)	$ 8,400	$ -	No Increase for FY 2019-2020
83	Field Manager	$ 55,292	$ 66,350	$ 65,344	$ (1,006)	$ 67,391	$ 2,047	Field Manager Costs Includes 3% Increase
84	Road & Street Facilities							
85	Gate Phone	$ 5,708	$ 6,850	$ 6,500	$ (350)	$ 6,800	$ 300	
86	Street Light Decorative Light Maintenance	$ 21,653	$ 25,984	$ 21,421	$ (4,563)	$ 10,000	$ (11,421)	
87	Sidewalk Repair & Maintenance	$ 4,900	$ -	$ 15,000	$ 15,000	$ 15,000	$ -	
88	Street Sign Repair & Replacement	$ 3,300	$ 3,960	$ 4,000	$ 40	$ 8,000	$ 4,000	
89	Roadway Repair & Maintenance	$ 6,535	$ 7,842	$ 7,000	$ (842)	$ 7,000	$ -	
90	Storm Sewer Cleaning	$ -		$ 10,000	$ 10,000	$ 10,000	$ -	
91	Street/Sidewalk Cleaning	$ 23,748	$ 28,498	$ 27,200	$ (1,298)	$ 27,200	$ -	Annual pressure washing $ 21, 000 and quarterly street sweeping $ 7, 200.00.
92	Parks & Recreation							
93	Misc. Maintenance and Repair	$ 2,042	$ 2,450	$ 1,500	$ (950)	$ 4,000	$ 2,500	
94	Furniture Repair/Replacement	$ -	$ -	$ 4,000	$ 4,000	$ 4,000	$ -	Allowance to include new furniture at the guardhouse.
95	Fishing Pier & Pavillion Maintenance Repairs	$ -		$ 2,000	$ 2,000	$ 2,000	$ -	
96	Contingency							
97	Capital Projects - Tree and Plant Replacement	$ 3,019	$ 3,623	$ -	$ (3,623)	$ 33,500	$ 33,500	Gazebos New Landscaping
98	Capital Projects - Sod Replacement	$ 13,500	$ 13,500	$ -	$ (13,500)		$ -	
99	Capital Projects - Asset Review Projects	$ 52,312	$ 62,774	$ 87,640	$ 24,866	$ 50,000	$ (37,640)	Est.
100	Capital Projects - Field Services Tools	$ 6,932	$ 8,318	$ -	$ (8,318)	$ -	$ -	
101	Capital Projects - LED Lighting Project	$ 107,004	$ 128,405	$ 200,000	$ 71,595	$ -	$ (200,000)	Est.
102	Interfund Transfer		$ -	$ -	$ -		$ -	
103								
104	**Field Operations Subtotal**	**$ 1,337,544**	**$ 1,582,964**	**$ 1,474,585**	**$ (108,379)**	**$ 1,453,304**	**$ (21,280)**	
105								
106	**Contingency for County TRIM Notice**							
107								
108	**TOTAL EXPENDITURES**	**$ 1,487,137**	**$ 1,758,307**	**$ 1,684,313**	**$ (73,994)**	**$ 1,671,278**	**$ (13,034)**	
109								
110	**EXCESS OF REVENUES OVER EXPENDITURES**	**$ 232,790**	**$ (33,141)**	**$ 0**	**$ (33,141)**	**$ -**	**$ (0)**	

Proposed Budget
Paseo Community Development District
Reserve Fund
Fiscal Year 2019/2020

	Chart of Accounts Classification	Actual YTD through 07/31/19	Projected Annual Totals 2018/2019	Annual Budget for 2018/2019	Projected Budget variance for 2018/2019	Budget for 2019/2020	Budget Increase (Decrease) vs 2018/2019	Comments
1								
2	**REVENUES**							
3								
4	Interest Earnings							
5	Interest Earnings	$ 6,414	$ 8,552	0	$ 8,552	$ -	$ -	
6	Special Assessments							
7	Tax Roll*	$ 210,125	$ 210,125	$ 210,125	$ -	$ 215,378	$ 5,253	As per Reserve Study
8								
9	**TOTAL REVENUES**	**$ 216,539**	**$ 210,125**	**$ 210,125**	**$ -**	**$ 215,378**	**$ 5,253**	
10								
11	Balance Forward from Prior Year	$ -	$ -	$ -	$ -	$ -	$ -	
12								
13	**TOTAL REVENUES AND BALANCE FORWARD**	**$ 216,539**	**$ 210,125**	**$ 210,125**	**$ -**	**$ 215,378**	**$ 5,253**	
14								
17	**EXPENDITURES**							
18								
19	Contingency							
20	Capital Reserves	$ 15,042	$ 18,050	$ 210,125	$ 192,075	$ 215,378	$ 5,253	
21	Capital Outlay	$ -	$ -	$ -	$ -	$ -	$ -	
22								
23	**TOTAL EXPENDITURES**	**$ 15,042**	**$ 18,050**	**$ 210,125**	**$ 192,075**	**$ 215,378**	**$ 5,253**	
24								
25	**EXCESS OF REVENUES OVER EXPENDITURES**	**$ 201,497**	**$ 192,075**	**$ -**	**$ 192,075**	**$ -**	**$ -**	

Budget Template
Paseo Community Development District
Debt Service
Fiscal Year 2019/2020

Chart of Accounts Classification	Series 2018	Budget for 2019/2020
REVENUES		
Special Assessments		
Net Special Assessments	$773,670.36	$773,670.36
TOTAL REVENUES	**$773,670.36**	**$773,670.36**
EXPENDITURES		
Administrative		
Financial & Administrative		
Debt Service Obligation	$773,670.36	$773,670.36
Administrative Subtotal	**$773,670.36**	**$773,670.36**
Principal Balloon Payment		
TOTAL EXPENDITURES	**$773,670.36**	**$773,670.36**
EXCESS OF REVENUES OVER EXPENDITUF	**$0.00**	**$0.00**

Lee County Collection Early Payment Discounts (4%):	4.00%
Gross assessments	**$805,906.62**

Notes:
Tax Roll Early Payment Discount for Lee County is 4.0% of Tax Roll.
Budgeted net of tax roll assessments. See Assessment Table.

PASEO COMMUNITY DEVELOPMENT DISTRICT

FISCAL YEAR 2019/2020 O&M AND DEBT SERVICE ASSESSMENT SCHEDULE

2019/2020 O&M Budget (net):	**$1,886,656.00**
Early Payment Discount @ 4%	**$78,610.67**
Tax Collector Fee ($1.45 per parcel)	**$1,661.70**
2019/2020 Total:	**$1,966,928.37**

2018/2019 O&M Budget	$1,894,438.00
2019/2020 O&M Budget	$1,886,656.00
Total Difference:	**-$7,782.00**

	PER UNIT ANNUAL ASSESSMENT		**Proposed Increase / Decrease**
	2018/2019	**2019/2020**	**$**
Debt Service - Multi-Family	$581.25	$524.34	-$56.91
Operations/Maintenance	$1,747.01	$1,742.36	-$4.65
Total	**$2,328.26**	**$2,266.70**	**-$61.56**
Debt Service - Single Fami	$1,162.50	$1,048.67	-$113.83
Operations/Maintenance	$1,678.17	$1,667.26	-$10.91
Total	**$2,840.67**	**$2,715.93**	**-$124.74**
Debt Service - Villas	$1,162.50	$1,048.67	-$113.83
Operations/Maintenance	$1,678.17	$1,667.26	-$10.91
Total	**$2,840.67**	**$2,715.93**	**-$124.74**

PASEO COMMUNITY DEVELOPMENT DISTRICT

FISCAL YEAR 2019/2020 O&M AND DEBT SERVICE ASSESSMENT SCHEDULE

TOTAL O&M BUDGET		**$1,832,656.00**	**(4) TRASH COMPACTOR ASSESSMENT**		**$54,000.00**
EARLY PAYMENT DISCOUNTS	**4.0%**	**$76,360.67**	**EARLY PAYMENT DISCOUNTS @**	**4.0%**	**$2,250.00**
TAX COLLECTOR FEE ($1.45 PER PARCEL)		**$1,661.70**			
TOTAL O&M ASSESSMENT		**$1,910,678.37**	**TOTAL TRASH COMPACTOR ASSESSMENT**		**$56,250.00**

LOT SIZE	UNITS ASSESSED		ALLOCATION OF O&M ASSESSMENT				ALLOCATION OF TRASH COMPACTOR ASSESSMENT (4)				PER LOT ANNUAL ASSESSMENT SERIES 2018		
		SERIES 2018 DEBT		TOTAL	% TOTAL	TOTAL		TOTAL	% TOTAL	TOTAL			
PLATTED PARCELS	**O&M**	**SERVICE (1) (3)**	**EAU FACTOR**	**EAU's**	**EAU's**	**O&M BUDGET**	**EAU FACTOR**	**EAU's**	**EAU's**	**O&M BUDGET**	**O&M**	**DEBT SERVICE (5)**	**TOTAL (6) (8)**
Multi-Family (A-1)	271	268	1.00	271.00	23.65%	$451,827.08	1.00	271.00	36.18%	$20,352.14	**$1,742.36**	**$524.34**	**$2,266.70**
Multi-Family (A-2)	478	477	1.00	478.00	41.71%	$796,949.62	1.00	478.00	63.82%	$35,897.86	**$1,742.36**	**$524.34**	**$2,266.70**
Single Family (A-1)	137	136	1.00	137.00	11.95%	$228,414.43	0.00	0.00	0.00%	$0.00	**$1,667.26**	**$1,048.67**	**$2,715.93**
Single Family (A-2_	184	184	1.00	184.00	16.06%	$306,775.58	0.00	0.00	0.00%	$0.00	**$1,667.26**	**$1,048.67**	**$2,715.93**
Villa (A-2)	76	76	1.00	76.00	6.63%	$126,711.65	0.00	0.00	0.00%	$0.00	**$1,667.26**	**$1,048.67**	**$2,715.93**
	1146	1141		1146.00	100.00%	**$1,910,678.37**		749.00	100.00%	**$56,250.00**			
LESS: Lee County Collection Costs ($1.45 per parcel / line) and Early Payment Discounts (4%):						**($78,022.37)**				**($2,250.00)**			
Net Revenue to be Collected:						**$1,832,656.00**				**$54,000.00**			

(1) Reflects 3 (three) Series 2018 Multi-Family prepayments and 1 (one) Single Family prepayment.

(2) Reflects 1 (one) Series 2018 Multi-Family prepayment.

(3) Reflects the number of total lots with Series 2018 debt outstanding.

(4) Only the Multi-Family units have access to the trash compactor, therefore are the only units benefiting from that service.

(5) Annual debt service assessment per lot adopted in connection with the Series 2018 bond issues. Annual assessment includes principal, interest, Lee County collection costs and early payment

(6) Annual assessment that will appear on November 2019 Lee County property tax bill. Amount shown includes all applicable collection costs and early payment discounts (up to 4% if paid early).

(7) Certain debt service assessments may be subject to the restructuring agreement.

Tab 9

RESOLUTION 2019-05

THE ANNUAL APPROPRIATION RESOLUTION OF THE PASEO COMMUNITY DEVELOPMENT DISTRICT RELATING TO THE ANNUAL APPROPRIATIONS AND ADOPTING THE BUDGET FOR THE FISCAL YEAR BEGINNING OCTOBER 1, 2019 AND ENDING SEPTEMBER 30, 2020

WHEREAS, Rizzetta & Company, Inc. ("District Manager") has, prior to the fifteenth (15th) day of June, 2019, submitted to the Board of Supervisors (the "Board") a proposed budget for the ensuing budget year (the "Proposed Budget") along with an explanatory and complete financial plan for each fund of the Paseo Community Development District (the "District"), pursuant to the provisions of Section 190.008(2)(a), Florida Statutes; and

WHEREAS, at least sixty (60) days prior to the adoption of the Proposed Budget, the District filed a copy of the Proposed Budget with the local governing authorities having jurisdiction over the area included in the District pursuant to the provisions of Section 190.008(2)(b), Florida Statutes; and

WHEREAS, the Board set August 28, 2019 as the date for a public hearing on the Proposed Budget, as may have been revised from time to time, and gave notice by publication of the public hearing pursuant to Section 190.008(2)(a), Florida Statutes; and

WHEREAS, the District Manager posted the Proposed Budget, as may have been revised from time to time, on the District's website at least two (2) days before the public hearing or transmitted the Proposed Budget to the manager or administrator of the City of Fort Myers, Lee County for posting on its website; and

WHEREAS, Section 190.008(2)(a), Florida Statutes, requires that, prior to October 1 of each year, the District Board, by passage of the Annual Appropriation Resolution, adopt a budget for the ensuing fiscal year and appropriate those sums of money that the Board deems necessary to defray all expenditures of the District during the ensuing fiscal year; and

WHEREAS, the District Manager has prepared the Proposed Budget projecting the cash receipts and disbursements anticipated during a given time period, including reserves for contingencies for emergency or other unanticipated expenditures during the fiscal year.

NOW, THEREFORE, BE IT RESOLVED BY THE BOARD OF SUPERVISORS OF THE PASEO COMMUNITY DEVELOPMENT DISTRICT:

Section 1. Budget

a. The Board has reviewed the District Manager's Proposed Budget, a copy of which is on file with the office of the District Manager and at the District's Records Office, and hereby approves certain amendments thereto, as shown in Section 2 below.

b. That the District Manager's Proposed Budget, as amended by the Board, attached hereto as Exhibit "A", is hereby adopted in accordance with the provisions of Section 190.008(2)(a), Florida Statutes, and incorporated herein by reference (the "Adopted Budget"); provided, however, that the comparative figures contained in the Adopted Budget may be subsequently revised as deemed necessary by the District Manager to reflect actual revenues and expenditures for Fiscal Year 2019 and/or revised projections for Fiscal Year 2020.

c. That the Adopted Budget shall be maintained in the office of the District Manager and at the District's Records Office and shall be identified as "The Budget for the Paseo Community Development District for the Fiscal Year Ending September 30, 2020, as adopted by the Board of Supervisors on August 28, 2019."

Section 2. Appropriations

There is hereby appropriated out of the revenues of the District, for the fiscal year beginning October 1, 2018, and ending September 30, 2019, the sum of $_____ to be raised by the levy of assessments and otherwise, which sum is deemed by the Board of Supervisors to be necessary to defray all expenditures of the District during said budget year, to be divided and appropriated in the following fashion:

TOTAL GENERAL FUND	$_____
TOTAL RESERVE FUND	$_____
DEBT SERVICE FUND(S)	$_____
TOTAL ALL FUNDS	$_____

Section 3. Supplemental Appropriations

The Board may authorize by resolution supplemental appropriations or revenue changes for any lawful purpose from funds on hand or estimated to be received within the fiscal year as follows:

a. Board may authorize a transfer of the unexpended balance or portion thereof of any appropriation item.

b. Board may authorize an appropriation from the un-appropriated balance of any fund.

c. Board may increase any revenue or income budget amount to reflect receipt of any additional unbudgeted monies and make the corresponding change to appropriations or the un-appropriated balance.

The District Manager and Treasurer shall have the power within a given fund to authorize the transfer of any unexpected balance of any appropriation item or any portion thereof, provided such transfers do not exceed Ten Thousand Dollars ($10,000) or have the effect of causing more than 10% of the total appropriation of a given program or project to be transferred, previously approved transfers included. Such transfer shall not have the effect of causing a more than $10,000 or 10% increase, previously approved transfers included, to the original budget appropriation for the receiving program. Transfers within a program or project may be approved by the Board of Supervisors. The District Manager or Treasurer must establish administrative procedures which require information on the request forms proving that such transfer requests comply with this section.

ADOPTED this 28th day of August, 2019.

ATTEST:

PASEO COMMUNITY DEVELOPMENT DISTRICT

By: _____
Secretary/Assistant Secretary

By: _____

Print:_____
Chairman/Vice-Chairman

Exhibit “A” – Budget

EXHIBIT "A"

FISCAL YEAR 2019/2020 BUDGET

Tab 10

RESOLUTION 2019-06

A RESOLUTION OF THE BOARD OF SUPERVISORS OF THE PASEO COMMUNITY DEVELOPMENT DISTRICT IMPOSING SPECIAL ASSESSMENTS AND CERTIFYING AN ASSESSMENT ROLL; PROVIDING A SEVERABILITY CLAUSE; AND PROVIDING AN EFFECTIVE DATE.

WHEREAS, the Paseo Community Development District (the "District") is a local unit of special-purpose government established pursuant to Chapter 190, Florida Statutes, for the purpose of providing, operating and maintaining infrastructure improvements, facilities and services to the lands within the District; and

WHEREAS, the District is located in The City of Fort Myers, Lee County, Florida (the "County"); and

WHEREAS, the District has constructed or acquired various infrastructure improvements and provides certain services in accordance with the District's adopted improvement plan and Chapter 190, Florida Statutes; and

WHEREAS, the Board of Supervisors (the "Board") of the District hereby determines to undertake various operations and maintenance activities described in the District's budget for Fiscal Year 2019-2020 (the "Budget"), attached hereto as Exhibit "A" and incorporated by reference herein; and

WHEREAS, the District must obtain sufficient funds to provide for the operation and maintenance of the services and facilities provided by the District as described in the District's Budget; and

WHEREAS, the provision of such services, facilities, and operations is a benefit to lands within the District; and

WHEREAS, Chapter 190, Florida Statutes, provides that the District may impose special assessments on benefitted lands within the District; and

WHEREAS, Chapter 197, Florida Statutes, provides a mechanism pursuant to which such special assessments may be placed on the tax roll and collected by the local tax collector ("Uniform Method"); and

WHEREAS, the District has previously evidenced its intention to utilize this Uniform Method; and

WHEREAS, the District has approved an Agreement with the Property Appraiser and Tax Collector of the County to provide for the collection of the special assessments under the Uniform Method; and

WHEREAS, it is in the best interests of the District to proceed with the imposition of the special assessments for operations and maintenance on benefitted lands in the amounts contained in the Budget; and

WHEREAS, the District has previously levied an assessment for debt service, which is also indicated in Exhibit "A"; and

WHEREAS, it is in the best interests of the District to adopt the Assessment Roll of the Paseo Community Development District, attached to this Resolution as Exhibit "B" (the "Assessment Roll") and incorporated as a material part of this Resolution by this reference, and to certify a portion of the Assessment Roll (as specified herein) to the County Tax Collector pursuant to the Uniform Method; and

WHEREAS, it is in the best interests of the District to permit the District Manager to amend the Assessment Roll adopted herein, including that portion certified to the County Tax Collector by this Resolution, as the Property Appraiser updates the property roll for the County, at such time as authorized by Florida law.

NOW, THEREFORE, BE IT RESOLVED BY THE BOARD OF SUPERVISORS OF THE PASEO COMMUNITY DEVELOPMENT DISTRICT:

SECTION 1. BENEFIT. The provision of the services, facilities, and operations as described in Exhibit "A" confer a special and peculiar benefit to the lands within the District, which benefits exceed or equal the costs of the assessments. The allocation of the costs to the specially benefitted lands is shown in Exhibits "A" and "B".

SECTION 2. ASSESSMENT IMPOSITION. A special assessment for operation and maintenance, as provided for in Chapter 190, Florida Statutes, is hereby imposed and levied on benefitted lands within the District in accordance with Exhibits "A" and "B". The lien of the special assessment for operations and maintenance imposed and levied by this Resolution shall be effective upon passage of this Resolution. The District has previously levied an assessment for debt service, which is confirmed herein and is also indicated in Exhibits "A" and "B".

SECTION 3. COLLECTION AND ENFORCEMENT; PENALTIES; INTEREST.

A. For any and all platted lots and developed lands within the District, collection of the operation and maintenance special assessments, as well as the previously levied debt service assessments, shall be at the same time and in the same manner as County taxes in accordance with the Uniform Method, and as set forth in Exhibits "A" and "B".

SECTION 4. ASSESSMENT ROLL. The District's Assessment Roll, attached to this Resolution as Exhibit "B", is hereby certified. That portion of the District's Assessment Roll which includes developed lands and platted lots is hereby certified to the County Tax Collector and shall be collected by the County Tax Collector in the same manner and time as County taxes. The proceeds therefrom shall be paid to the Paseo Community Development District.

SECTION 5. ASSESSMENT ROLL AMENDMENT. The District Manager shall keep apprised of all updates made to the County property roll by the Property Appraiser after the date of this Resolution, and shall amend the District's Assessment Roll in accordance

with any such updates to the County property roll, at such time as authorized by Florida law. After any amendment of the Assessment Roll, the District Manager shall file the updates to the tax roll in the District records.

SECTION 6. SUPPLEMENTATION OF PREVIOUS DISTRICT RESOLUTION(S). Previous District resolutions which, among other things, levied bond debt service assessments on real property within the District, are hereby supplemented by this Resolution with regard to District collection procedures for such debt service assessments. It is the intent of the District to utilize the collection methods and procedures set forth in Section 3 herein for the collection of both operation and maintenance assessments and debt service assessments.

SECTION 7. SEVERABILITY. The invalidity or unenforceability of any one or more provisions of this Resolution shall not affect the validity or enforceability of the remaining portions of this Resolution, or any part thereof.

SECTION 8. EFFECTIVE DATE. This Resolution shall take effect upon the passage and adoption of this Resolution by the Board of Supervisors of the Paseo Community Development District.

PASSED AND ADOPTED this 28th day of August, 2019.

ATTEST:

PASEO COMMUNITY DEVELOPMENT DISTRICT

By: _____
Secretary/Assistant Secretary

By:_____
Print: _____
Chairman / Vice Chairman
Board of Supervisors

Exhibit A: Fiscal Year 2019/2020 Budget
Exhibit B: Assessment Roll (Uniform Method)

EXHIBIT "A"

Fiscal Year 2019/2020 Budget

EXHIBIT "B"

Assessment Roll

Lien Roll

PASEO COMMUNITY DEVELOPMENT DISTRICT
2019 ASSESSMENT LIEN ROLL

STRAP	Owner	Site Address	LU	SERIES 2018 REMAINING PRINCIPAL (1)	SERIES 2018 DEBT SERVICE	O&M	TOTAL
09-45-25-00-00002.0010	PO BOX 398FORT MYERS	8001 PENZANCE BLVDFORT MYERS, FL 33912	0	$0.00	$0.00	$0.00	$0.00
09-45-25-P2-0010D.0020	INC12750 CITRUS PARK L	PASEO C/EFORT MYERS, FL	0	$0.00	$0.00	$0.00	$0.00
09-45-25-P2-00200.0010	DENE M311 DEVON CTG	8304 ADELIO LNFORT MYERS, FL 33912	SFA2	$12,121.00	$1,006.72	$1,599.18	$2,605.90
09-45-25-P2-00200.0020	A H/W3550 WILDWOOD D	8306 ADELIO LNFORT MYERS, FL 33912	SFA2	$12,121.00	$1,006.72	$1,599.18	$2,605.90
09-45-25-P2-00200.0030	DIANE K8308 ADELIO LN	8308 ADELIO LNFORT MYERS, FL 33912	SFA2	$12,121.00	$1,006.72	$1,599.18	$2,605.90
09-45-25-P2-00200.0040	AN K8310 ADELIO LNFOR	8310 ADELIO LNFORT MYERS, FL 33912	SFA2	$12,121.00	$1,006.72	$1,599.18	$2,605.90
09-45-25-P2-00200.0050	A J8312 ADELIO LNFORT	8312 ADELIO LNFORT MYERS, FL 33912	SFA2	$12,121.00	$1,006.72	$1,599.18	$2,605.90
09-45-25-P2-00200.0060	SB FAMILY TRUST8314 AD	8314 ADELIO LNFORT MYERS, FL 33912	SFA2	$12,121.00	$1,006.72	$1,599.18	$2,605.90
09-45-25-P2-00200.0070	NDA K8316 ADELIO LNFO	8316 ADELIO LNFORT MYERS, FL 33912	SFA2	$12,121.00	$1,006.72	$1,599.18	$2,605.90
09-45-25-P2-00200.0080	DY R8318 ADELIO LNFOR	8318 ADELIO LNFORT MYERS, FL 33912	SFA2	$12,121.00	$1,006.72	$1,599.18	$2,605.90
09-45-25-P2-00200.0090	A8320 ADELIO LNFORT M	8320 ADELIO LNFORT MYERS, FL 33912	SFA2	$12,121.00	$1,006.72	$1,599.18	$2,605.90
09-45-25-P2-00200.0100	YOUNG REVOCABLE TR	8322 ADELIO LNFORT MYERS, FL 33912	SFA2	$12,121.00	$1,006.72	$1,599.18	$2,605.90
09-45-25-P2-00200.0110	N PALAIA REV TRUST8324	8324 ADELIO LNFORT MYERS, FL 33912	SFA2	$12,121.00	$1,006.72	$1,599.18	$2,605.90
09-45-25-P2-00200.0120	JST35196 JEFFERSON AVE	8326 ADELIO LNFORT MYERS, FL 33912	SFA2	$12,121.00	$1,006.72	$1,599.18	$2,605.90
09-45-25-P2-00200.0130	RLA J8328 ADELIO LNFO	8328 ADELIO LNFORT MYERS, FL 33912	SFA2	$12,121.00	$1,006.72	$1,599.18	$2,605.90
09-45-25-P2-00200.0140	N LYNNE J/TLPH3-191 KIN	8330 ADELIO LNFORT MYERS, FL 33912	SFA2	$12,121.00	$1,006.72	$1,599.18	$2,605.90
09-45-25-P2-00200.0150	MILY TRUST843 GLENCAI	8332 ADELIO LNFORT MYERS, FL 33912	SFA2	$12,121.00	$1,006.72	$1,599.18	$2,605.90
09-45-25-P2-00200.0160	I BEVERLY J8334 ADELIC	8334 ADELIO LNFORT MYERS, FL 33912	SFA2	$12,121.00	$1,006.72	$1,599.18	$2,605.90
09-45-25-P2-00200.0170	KER JOANNA M8336 ADE	8336 ADELIO LNFORT MYERS, FL 33912	SFA2	$12,121.00	$1,006.72	$1,599.18	$2,605.90
09-45-25-P2-00200.0180	ANCY KATHLEEN H/W12	8338 ADELIO LNFORT MYERS, FL 33912	SFA2	$12,121.00	$1,006.72	$1,599.18	$2,605.90
09-45-25-P2-00200.0190	JLIE L/E8340 ADELIO LNF	8340 ADELIO LNFORT MYERS, FL 33912	SFA2	$12,121.00	$1,006.72	$1,599.18	$2,605.90
09-45-25-P2-00200.0200	TRUST1346 WELLINGTON	8339 ADELIO LNFORT MYERS, FL 33912	SFA2	$12,121.00	$1,006.72	$1,599.18	$2,605.90
09-45-25-P2-00200.0210	MY H/W324 BRIDGEBRO	8337 ADELIO LNFORT MYERS, FL 33912	SFA2	$12,121.00	$1,006.72	$1,599.18	$2,605.90
09-45-25-P2-00200.0220	AM SMITH ST STE AELDE	8335 ADELIO LNFORT MYERS, FL 33912	SFA2	$12,121.00	$1,006.72	$1,599.18	$2,605.90
09-45-25-P2-00200.0230	LY F416 CHURCHILL LNF	8333 ADELIO LNFORT MYERS, FL 33912	SFA2	$12,121.00	$1,006.72	$1,599.18	$2,605.90
09-45-25-P2-00200.0240	RI D8331 ADELIO LNFORT	8331 ADELIO LNFORT MYERS, FL 33912	SFA2	$12,121.00	$1,006.72	$1,599.18	$2,605.90
09-45-25-P2-00200.0250	ARIA J/T8329 ADELIO LN	8329 ADELIO LNFORT MYERS, FL 33912	SFA2	$12,121.00	$1,006.72	$1,599.18	$2,605.90
09-45-25-P2-00200.0260	EBBIE ROBERTS36765 BR	8327 ADELIO LNFORT MYERS, FL 33912	SFA2	$12,121.00	$1,006.72	$1,599.18	$2,605.90
09-45-25-P2-00200.0270	CARROLL S8325 ADELIO I	8325 ADELIO LNFORT MYERS, FL 33912	SFA2	$12,121.00	$1,006.72	$1,599.18	$2,605.90
09-45-25-P2-00200.0280	NE T8323 ADELIO LNFOR	8323 ADELIO LNFORT MYERS, FL 33912	SFA2	$12,121.00	$1,006.72	$1,599.18	$2,605.90
09-45-25-P2-00200.0290	ARIA E8321 ADELIO LNF	8321 ADELIO LNFORT MYERS, FL 33912	SFA2	$12,121.00	$1,006.72	$1,599.18	$2,605.90
09-45-25-P2-00200.0300	RFOR ADELIO LAN TRUS	8319 ADELIO LNFORT MYERS, FL 33912	SFA2	$12,121.00	$1,006.72	$1,599.18	$2,605.90
09-45-25-P2-00200.0310	TA8317 ADELIO LNFORT M	8317 ADELIO LNFORT MYERS, FL 33912	SFA2	$12,121.00	$1,006.72	$1,599.18	$2,605.90
09-45-25-P2-00200.0320	D F + JONET A JAGGERS	8315 ADELIO LNFORT MYERS, FL 33912	SFA2	$12,121.00	$1,006.72	$1,599.18	$2,605.90
09-45-25-P2-00200.0330	72 MCMANUS AVEMANO	8313 ADELIO LNFORT MYERS, FL 33912	SFA2	$12,121.00	$1,006.72	$1,599.18	$2,605.90
09-45-25-P2-00200.0340	DA S8311 ADELIO LNFOR	8311 ADELIO LNFORT MYERS, FL 33912	SFA2	$12,121.00	$1,006.72	$1,599.18	$2,605.90
09-45-25-P2-00200.0350	M230 WICKLAWN WAYR	8309 ADELIO LNFORT MYERS, FL 33912	SFA2	$12,121.00	$1,006.72	$1,599.18	$2,605.90
09-45-25-P2-00200.0360	ER JULIA A J/T6212 SCHA	8307 ADELIO LNFORT MYERS, FL 33912	SFA2	$12,121.00	$1,006.72	$1,599.18	$2,605.90
09-45-25-P2-00200.0370	MES JOINT REVOCABLE I	8305 ADELIO LNFORT MYERS, FL 33912	SFA2	$12,121.00	$1,006.72	$1,599.18	$2,605.90
09-45-25-P2-00200.0380	N M8364 DARIO WAYFOR	8364 DARIO WAYFORT MYERS, FL 33912	SFA2	$12,121.00	$1,006.72	$1,599.18	$2,605.90
09-45-25-P2-00200.0390	EL S8366 DARIO WAYFOR	8366 DARIO WAYFORT MYERS, FL 33912	SFA2	$12,121.00	$1,006.72	$1,599.18	$2,605.90
09-45-25-P2-00200.0400	ARION K8368 DARIO WAY	8368 DARIO WAYFORT MYERS, FL 33912	SFA2	$12,121.00	$1,006.72	$1,599.18	$2,605.90
09-45-25-P2-00200.0410	CLEAVEY TRUST8370 DA	8370 DARIO WAYFORT MYERS, FL 33912	SFA2	$12,121.00	$1,006.72	$1,599.18	$2,605.90
09-45-25-P2-00200.0420	TH ANN8372 DARIO WAY	8372 DARIO WAYFORT MYERS, FL 33912	SFA2	$12,121.00	$1,006.72	$1,599.18	$2,605.90
09-45-25-P2-00200.0430	ESLIE8374 DARIO WAYFO	8374 DARIO WAYFORT MYERS, FL 33912	SFA2	$12,121.00	$1,006.72	$1,599.18	$2,605.90
09-45-25-P2-00200.0440	PRISESP O BOX 1048MOR	8376 DARIO WAYFORT MYERS, FL 33912	SFA2	$12,121.00	$1,006.72	$1,599.18	$2,605.90
09-45-25-P2-00200.0450	MAHENDRA J/T8378 DAR	8378 DARIO WAYFORT MYERS, FL 33912	SFA2	$12,121.00	$1,006.72	$1,599.18	$2,605.90
09-45-25-P2-00200.0460	ENAIDA H8380 DARIO W	8380 DARIO WAYFORT MYERS, FL 33912	SFA2	$12,121.00	$1,006.72	$1,599.18	$2,605.90
09-45-25-P2-00200.0470	LENE A8382 DARIO WAY	8382 DARIO WAYFORT MYERS, FL 33912	SFA2	$12,121.00	$1,006.72	$1,599.18	$2,605.90
09-45-25-P2-00200.0480	P5730 SEA TROUT PLAPC	8384 DARIO WAYFORT MYERS, FL 33912	SFA2	$12,121.00	$1,006.72	$1,599.18	$2,605.90
09-45-25-P2-00200.0490	UCE8383 DARIO WAYFOR	8383 DARIO WAYFORT MYERS, FL 33912	SFA2	$12,121.00	$1,006.72	$1,599.18	$2,605.90
09-45-25-P2-00200.0500	CUM STEFANIE1935 W RC	8381 DARIO WAYFORT MYERS, FL 33912	SFA2	$12,121.00	$1,006.72	$1,599.18	$2,605.90
09-45-25-P2-00200.0510	RICIA I8379 DARIO WAYI	8379 DARIO WAYFORT MYERS, FL 33912	SFA2	$12,121.00	$1,006.72	$1,599.18	$2,605.90
09-45-25-P2-00200.0520	OTTPO BOX 62334FORT M	11202 ADORA CTFORT MYERS, FL 33912	SFA2	$12,121.00	$1,006.72	$1,599.18	$2,605.90
09-45-25-P2-00200.0530	E352 HARRISON AVEMAS	11204 ADORA CTFORT MYERS, FL 33912	SFA2	$12,121.00	$1,006.72	$1,599.18	$2,605.90
09-45-25-P2-00200.0540	206 ADORA CTFORT MYE	11206 ADORA CTFORT MYERS, FL 33912	SFA2	$12,121.00	$1,006.72	$1,599.18	$2,605.90
09-45-25-P2-00200.0550	ROSALIND J/T11208 ADOR	11208 ADORA CTFORT MYERS, FL 33912	SFA2	$12,121.00	$1,006.72	$1,599.18	$2,605.90

PASEO COMMUNITY DEVELOPMENT DISTRICT
2019 ASSESSMENT LIEN ROLL

STRAP	Owner	Site Address	LU	SERIES 2018 REMAINING PRINCIPAL (1)	SERIES 2018 DEBT SERVICE	O&M	TOTAL
09-45-25-P2-00200.0560	ILY TRUST843 GLENCAIR	11211 ADORA CTFORT MYERS, FL 33912	SFA2	$12,121.00	$1,006.72	$1,599.18	$2,605.90
09-45-25-P2-00200.0570	1209 ADORA CTFORT MYI	11209 ADORA CTFORT MYERS, FL 33912	SFA2	$12,121.00	$1,006.72	$1,599.18	$2,605.90
09-45-25-P2-00200.0580	1207 ADORA CTFORT MYI	11207 ADORA CTFORT MYERS, FL 33912	SFA2	$12,121.00	$1,006.72	$1,599.18	$2,605.90
09-45-25-P2-00200.0590	NGER M11205 ADORA CT	11205 ADORA CTFORT MYERS, FL 33912	SFA2	$12,121.00	$1,006.72	$1,599.18	$2,605.90
09-45-25-P2-00200.0600	CABELL FAMILY TRUST	11203 ADORA CTFORT MYERS, FL 33912	SFA2	$12,121.00	$1,006.72	$1,599.18	$2,605.90
09-45-25-P2-00200.0610	1062 ESTEBAN DRFORT M	11062 ESTEBAN DRFORT MYERS, FL 33912	VILLA2	$12,121.00	$1,006.72	$1,599.18	$2,605.90
09-45-25-P2-00200.0620	SON FAMILY TRUST1106	11064 ESTEBAN DRFORT MYERS, FL 33912	VILLA2	$12,121.00	$1,006.72	$1,599.18	$2,605.90
09-45-25-P2-00200.0630	OANNE B11066 ESTEBAN	11066 ESTEBAN DRFORT MYERS, FL 33912	VILLA2	$12,121.00	$1,006.72	$1,599.18	$2,605.90
09-45-25-P2-00200.0640	GORASSO NIKCOLE J/T57	11068 ESTEBAN DRFORT MYERS, FL 33912	VILLA2	$12,121.00	$1,006.72	$1,599.18	$2,605.90
09-45-25-P2-00200.0650	MILY TRUST151 HIGGINB	11070 ESTEBAN DRFORT MYERS, FL 33912	VILLA2	$12,121.00	$1,006.72	$1,599.18	$2,605.90
09-45-25-P2-00200.0660	E 15606 HIDDEN OAKS C	11072 ESTEBAN DRFORT MYERS, FL 33912	VILLA2	$12,121.00	$1,006.72	$1,599.18	$2,605.90
09-45-25-P2-00200.0670	NE 117 PAXTON LANEST	11074 ESTEBAN DRFORT MYERS, FL 33912	VILLA2	$12,121.00	$1,006.72	$1,599.18	$2,605.90
09-45-25-P2-00200.0680	HA640 GEDDES RIDGE AV	11076 ESTEBAN DRFORT MYERS, FL 33912	VILLA2	$12,121.00	$1,006.72	$1,599.18	$2,605.90
09-45-25-P2-00200.0690	YBERG TRUST11078 ESTE	11078 ESTEBAN DRFORT MYERS, FL 33912	VILLA2	$12,121.00	$1,006.72	$1,599.18	$2,605.90
09-45-25-P2-00200.0700	J/T1524 20TH SIDE RDTC	11080 ESTEBAN DRFORT MYERS, FL 33912	VILLA2	$12,121.00	$1,006.72	$1,599.18	$2,605.90
09-45-25-P2-00200.0710	ANY RANCH RDCANERC	11082 ESTEBAN DRFORT MYERS, FL 33912	VILLA2	$12,121.00	$1,006.72	$1,599.18	$2,605.90
09-45-25-P2-00200.0720	JONAS 2005 REVOCABL	11084 ESTEBAN DRFORT MYERS, FL 33912	VILLA2	$12,121.00	$1,006.72	$1,599.18	$2,605.90
09-45-25-P2-00200.0730	11086 ESTEBAN DRFORT	11086 ESTEBAN DRFORT MYERS, FL 33912	VILLA2	$12,121.00	$1,006.72	$1,599.18	$2,605.90
09-45-25-P2-00200.0740	ORA L J/T21 WHITESTON	11088 ESTEBAN DRFORT MYERS, FL 33912	VILLA2	$12,121.00	$1,006.72	$1,599.18	$2,605.90
09-45-25-P2-00200.0750	RFOR TRUST NUMBER 81	11090 ESTEBAN DRFORT MYERS, FL 33912	VILLA2	$12,121.00	$1,006.72	$1,599.18	$2,605.90
09-45-25-P2-00200.0760	A20928 TORRE DEL LAGO	11092 ESTEBAN DRFORT MYERS, FL 33912	VILLA2	$12,121.00	$1,006.72	$1,599.18	$2,605.90
09-45-25-P2-00200.0770	FALVO FAMILY TRUST110	11094 ESTEBAN DRFORT MYERS, FL 33912	VILLA2	$12,121.00	$1,006.72	$1,599.18	$2,605.90
09-45-25-P2-00200.0780	LES11096 ESTEBAN DRFC	11096 ESTEBAN DRFORT MYERS, FL 33912	VILLA2	$12,121.00	$1,006.72	$1,599.18	$2,605.90
09-45-25-P2-00200.0790	723 KAVANAGH DRIVEWI	11098 ESTEBAN DRFORT MYERS, FL 33912	VILLA2	$12,121.00	$1,006.72	$1,599.18	$2,605.90
09-45-25-P2-00200.0800	BLACKWELL LIVING TRU	11100 ESTEBAN DRFORT MYERS, FL 33912	VILLA2	$12,121.00	$1,006.72	$1,599.18	$2,605.90
09-45-25-P2-00200.0810	11102 ESTEBAN DRFORT	11102 ESTEBAN DRFORT MYERS, FL 33912	VILLA2	$12,121.00	$1,006.72	$1,599.18	$2,605.90
09-45-25-P2-00200.0820	LI11104 ESTEBAN DRFOR	11104 ESTEBAN DRFORT MYERS, FL 33912	VILLA2	$12,121.00	$1,006.72	$1,599.18	$2,605.90
09-45-25-P2-00200.0830	R HARTING-SLOSAR LIVI	11106 ESTEBAN DRFORT MYERS, FL 33912	VILLA2	$12,121.00	$1,006.72	$1,599.18	$2,605.90
09-45-25-P2-00200.0840	GLENN HAWTHORNE BL	11108 ESTEBAN DRFORT MYERS, FL 33912	VILLA2	$12,121.00	$1,006.72	$1,599.18	$2,605.90
09-45-25-P2-00200.0850	A M11110 ESTEBAN DRFC	11110 ESTEBAN DRFORT MYERS, FL 33912	VILLA2	$12,121.00	$1,006.72	$1,599.18	$2,605.90
09-45-25-P2-00200.0860	12 ESTEBAN DRFORT MY	11112 ESTEBAN DRFORT MYERS, FL 33912	VILLA2	$12,121.00	$1,006.72	$1,599.18	$2,605.90
09-45-25-P2-00200.0870	EEN E11116 ESTEBAN DR	11114 ESTEBAN DRFORT MYERS, FL 33912	VILLA2	$12,121.00	$1,006.72	$1,599.18	$2,605.90
09-45-25-P2-00200.0880	EEN E11116 ESTEBAN DR	11116 ESTEBAN DRFORT MYERS, FL 33912	VILLA2	$12,121.00	$1,006.72	$1,599.18	$2,605.90
09-45-25-P2-00200.0890	118 ESTEBAN DRFORT MY	11118 ESTEBAN DRFORT MYERS, FL 33912	VILLA2	$12,121.00	$1,006.72	$1,599.18	$2,605.90
09-45-25-P2-00200.0900	FAMILY TRUST2596 BRID	11120 ESTEBAN DRFORT MYERS, FL 33912	VILLA2	$12,121.00	$1,006.72	$1,599.18	$2,605.90
09-45-25-P2-00200.0910	CEDARBROOK CRESCEN	11122 ESTEBAN DRFORT MYERS, FL 33912	VILLA2	$12,121.00	$1,006.72	$1,599.18	$2,605.90
09-45-25-P2-00200.0920	EN11124 ESTEBAN DRFOR	11124 ESTEBAN DRFORT MYERS, FL 33912	VILLA2	$12,121.00	$1,006.72	$1,599.18	$2,605.90
09-45-25-P2-00200.0930	LILI E11126 ESTEBAN DI	11126 ESTEBAN DRFORT MYERS, FL 33912	VILLA2	$12,121.00	$1,006.72	$1,599.18	$2,605.90
09-45-25-P2-00200.0940	CKIE L11128 ESTEBAN DI	11128 ESTEBAN DRFORT MYERS, FL 33912	VILLA2	$12,121.00	$1,006.72	$1,599.18	$2,605.90
09-45-25-P2-00200.0950	28 SUMMERVALE DRHOI	11130 ESTEBAN DRFORT MYERS, FL 33912	VILLA2	$12,121.00	$1,006.72	$1,599.18	$2,605.90
09-45-25-P2-00200.0960	A10 NANCY STOTTAWA	11132 ESTEBAN DRFORT MYERS, FL 33912	VILLA2	$12,121.00	$1,006.72	$1,599.18	$2,605.90
09-45-25-P2-00200.0970	LIVING TRUST11134 EST	11134 ESTEBAN DRFORT MYERS, FL 33912	VILLA2	$12,121.00	$1,006.72	$1,599.18	$2,605.90
09-45-25-P2-00200.0980	A16 JEREMIAH PLOTTAW	11136 ESTEBAN DRFORT MYERS, FL 33912	VILLA2	$12,121.00	$1,006.72	$1,599.18	$2,605.90
09-45-25-P2-00200.0990	8 ESTEBAN DRFORT MY	11138 ESTEBAN DRFORT MYERS, FL 33912	VILLA2	$12,121.00	$1,006.72	$1,599.18	$2,605.90
09-45-25-P2-00200.1000	NE AGNES11140 ESTEBAN	11140 ESTEBAN DRFORT MYERS, FL 33912	VILLA2	$12,121.00	$1,006.72	$1,599.18	$2,605.90
09-45-25-P2-00200.1010	ISA633 PRESTWICK LANI	11141 ESTEBAN DRFORT MYERS, FL 33912	VILLA2	$12,121.00	$1,006.72	$1,599.18	$2,605.90
09-45-25-P2-00200.1020	NICE JUNE11139 ESTEBA	11139 ESTEBAN DRFORT MYERS, FL 33912	VILLA2	$12,121.00	$1,006.72	$1,599.18	$2,605.90
09-45-25-P2-00200.1030	189 UPPER MOUNTAIN AV	11137 ESTEBAN DRFORT MYERS, FL 33912	VILLA2	$12,121.00	$1,006.72	$1,599.18	$2,605.90
09-45-25-P2-00200.1040	C21911 WATDER OAK CIR	11135 ESTEBAN DRFORT MYERS, FL 33912	VILLA2	$12,121.00	$1,006.72	$1,599.18	$2,605.90
09-45-25-P2-00200.1050	ELIKA MARIA H/W7519 PI	11133 ESTEBAN DRFORT MYERS, FL 33912	VILLA2	$12,121.00	$1,006.72	$1,599.18	$2,605.90
09-45-25-P2-00200.1060	R JOB US PROPERTY TRU	11131 ESTEBAN DRFORT MYERS, FL 33912	VILLA2	$12,121.00	$1,006.72	$1,599.18	$2,605.90
09-45-25-P2-00200.1070	LISA MPO BOX 143MIRR	11129 ESTEBAN DRFORT MYERS, FL 33912	VILLA2	$12,121.00	$1,006.72	$1,599.18	$2,605.90
09-45-25-P2-00200.1080	IA34 FIFESHIRE CROTTAV	11127 ESTEBAN DRFORT MYERS, FL 33912	VILLA2	$12,121.00	$1,006.72	$1,599.18	$2,605.90
09-45-25-P2-00200.1090	FOR WALLY PHILLIPS TR	11125 ESTEBAN DRFORT MYERS, FL 33912	VILLA2	$12,121.00	$1,006.72	$1,599.18	$2,605.90
09-45-25-P2-00200.1100	NN J/T5100 ARROWHEAD	11123 ESTEBAN DRFORT MYERS, FL 33912	VILLA2	$12,121.00	$1,006.72	$1,599.18	$2,605.90
09-45-25-P2-00200.1110	ROBERTS TRUST6559 CA	11121 ESTEBAN DRFORT MYERS, FL 33912	VILLA2	$12,121.00	$1,006.72	$1,599.18	$2,605.90
09-45-25-P2-00200.1120	ROBERTS TRUST6559 CA	11119 ESTEBAN DRFORT MYERS, FL 33912	VILLA2	$12,121.00	$1,006.72	$1,599.18	$2,605.90

PASEO COMMUNITY DEVELOPMENT DISTRICT
2019 ASSESSMENT LIEN ROLL

STRAP	Owner	Site Address	LU	SERIES 2018 REMAINING PRINCIPAL (1)	SERIES 2018 DEBT SERVICE	O&M	TOTAL
09-45-25-P2-00200.1130	TONEHAVEN DRNORTH B	11117 ESTEBAN DRFORT MYERS, FL 33912	VILLA2	$12,121.00	$1,006.72	$1,599.18	$2,605.90
09-45-25-P2-00200.1140	EN M25 OLD WESTFALL I	11115 ESTEBAN DRFORT MYERS, FL 33912	VILLA2	$12,121.00	$1,006.72	$1,599.18	$2,605.90
09-45-25-P2-00200.1150	FER 11113 ESTEBAN DRF	11113 ESTEBAN DRFORT MYERS, FL 33912	VILLA2	$12,121.00	$1,006.72	$1,599.18	$2,605.90
09-45-25-P2-00200.1160	NO DANIEL +CICCHINO M	11111 ESTEBAN DRFORT MYERS, FL 33912	VILLA2	$12,121.00	$1,006.72	$1,599.18	$2,605.90
09-45-25-P2-00200.1170	DURGRAF TRUST 11109 ES	11109 ESTEBAN DRFORT MYERS, FL 33912	VILLA2	$12,121.00	$1,006.72	$1,599.18	$2,605.90
09-45-25-P2-00200.1180	EM TRUST11107 ESTEBAI	11107 ESTEBAN DRFORT MYERS, FL 33912	VILLA2	$12,121.00	$1,006.72	$1,599.18	$2,605.90
09-45-25-P2-00200.1190	A C11105 ESTEBAN DRFO	11105 ESTEBAN DRFORT MYERS, FL 33912	VILLA2	$12,121.00	$1,006.72	$1,599.18	$2,605.90
09-45-25-P2-00200.1200	NNA D11103 ESTEBAN DR	11103 ESTEBAN DRFORT MYERS, FL 33912	VILLA2	$12,121.00	$1,006.72	$1,599.18	$2,605.90
09-45-25-P2-00200.1210	1 ESTEBAN DRFORT MYE	11101 ESTEBAN DRFORT MYERS, FL 33912	VILLA2	$12,121.00	$1,006.72	$1,599.18	$2,605.90
09-45-25-P2-00200.1220	1 ESTEBAN DRFORT MYE	11091 ESTEBAN DRFORT MYERS, FL 33912	VILLA2	$12,121.00	$1,006.72	$1,599.18	$2,605.90
09-45-25-P2-00200.1230	1089 ESTEBAN DRFORT M	11089 ESTEBAN DRFORT MYERS, FL 33912	VILLA2	$12,121.00	$1,006.72	$1,599.18	$2,605.90
09-45-25-P2-00200.1240	ROSANN J/T314 HEIDEL I	11087 ESTEBAN DRFORT MYERS, FL 33912	VILLA2	$12,121.00	$1,006.72	$1,599.18	$2,605.90
09-45-25-P2-00200.1250	EHDI H/W10 MOUNTAIN A	11085 ESTEBAN DRFORT MYERS, FL 33912	VILLA2	$12,121.00	$1,006.72	$1,599.18	$2,605.90
09-45-25-P2-00200.1260	RLY A7312 STOCKWOOD	11083 ESTEBAN DRFORT MYERS, FL 33912	VILLA2	$12,121.00	$1,006.72	$1,599.18	$2,605.90
09-45-25-P2-00200.1270	RFOR NICHOLS TRUST11	11081 ESTEBAN DRFORT MYERS, FL 33912	VILLA2	$12,121.00	$1,006.72	$1,599.18	$2,605.90
09-45-25-P2-00200.1280	S9 HICKORY DRMORRIS	11079 ESTEBAN DRFORT MYERS, FL 33912	VILLA2	$12,121.00	$1,006.72	$1,599.18	$2,605.90
09-45-25-P2-00200.1290	LE W4 MIDDLEBROOK L	11077 ESTEBAN DRFORT MYERS, FL 33912	VILLA2	$12,121.00	$1,006.72	$1,599.18	$2,605.90
09-45-25-P2-00200.1300	LDINE5596 EVENTING WA	11075 ESTEBAN DRFORT MYERS, FL 33912	VILLA2	$12,121.00	$1,006.72	$1,599.18	$2,605.90
09-45-25-P2-00200.1310	LYN M J/T11073 ESTEBAN	11073 ESTEBAN DRFORT MYERS, FL 33912	VILLA2	$12,121.00	$1,006.72	$1,599.18	$2,605.90
09-45-25-P2-00200.1320	SE B J/T11071 ESTEBAN D	11071 ESTEBAN DRFORT MYERS, FL 33912	VILLA2	$12,121.00	$1,006.72	$1,599.18	$2,605.90
09-45-25-P2-00200.1330	ANDERSON TRUST11069 I	11069 ESTEBAN DRFORT MYERS, FL 33912	VILLA2	$12,121.00	$1,006.72	$1,599.18	$2,605.90
09-45-25-P2-00200.1340	A H11067 ESTEBAN DRFO	11067 ESTEBAN DRFORT MYERS, FL 33912	VILLA2	$12,121.00	$1,006.72	$1,599.18	$2,605.90
09-45-25-P2-00200.1350	DA H CURRAN TRUST11	11065 ESTEBAN DRFORT MYERS, FL 33912	VILLA2	$12,121.00	$1,006.72	$1,599.18	$2,605.90
09-45-25-P2-00200.1360	TRUST9 VIEWMOUNT CR	11063 ESTEBAN DRFORT MYERS, FL 33912	VILLA2	$12,121.00	$1,006.72	$1,599.18	$2,605.90
09-45-25-P2-0020A.0000	INC12750 CITRUS PARK L	RIGHT OF WAYFORT MYERS, FL	0	$0.00	$0.00	$0.00	$0.00
09-45-25-P2-0020C.0010	INC12750 CITRUS PARK L	ESPERANZA @ PASEO C/EFORT MYERS, FL	0	$0.00	$0.00	$0.00	$0.00
09-45-25-P2-0020C.0020	INC12750 CITRUS PARK L	ESPERANZA @ PASEO C/EFORT MYERS, FL	0	$0.00	$0.00	$0.00	$0.00
09-45-25-P2-0020C.0030	INC12750 CITRUS PARK L	ESPERANZA @ PASEO C/EFORT MYERS, FL	0	$0.00	$0.00	$0.00	$0.00
09-45-25-P2-0020C.0040	INC12750 CITRUS PARK L	ESPERANZA @ PASEO C/EFORT MYERS, FL	0	$0.00	$0.00	$0.00	$0.00
09-45-25-P2-0020C.0050	INC12750 CITRUS PARK L	ESPERANZA @ PASEO C/EFORT MYERS, FL	0	$0.00	$0.00	$0.00	$0.00
09-45-25-P2-0020C.0060	INC12750 CITRUS PARK L	ESPERANZA @ PASEO C/EFORT MYERS, FL	0	$0.00	$0.00	$0.00	$0.00
09-45-25-P2-0020C.0070	INC12750 CITRUS PARK L	ESPERANZA @ PASEO C/EFORT MYERS, FL	0	$0.00	$0.00	$0.00	$0.00
09-45-25-P2-0020C.0080	INC12750 CITRUS PARK L	ESPERANZA @ PASEO C/EFORT MYERS, FL	0	$0.00	$0.00	$0.00	$0.00
09-45-25-P2-002B1.0000	INC12750 CITRUS PARK	SUBMERGEDFORT MYERS, FL	0	$0.00	$0.00	$0.00	$0.00
09-45-25-P2-002B2.0000	INC12750 CITRUS PARK	SUBMERGEDFORT MYERS, FL	0	$0.00	$0.00	$0.00	$0.00
09-45-25-P2-002B3.0000	INC12750 CITRUS PARK	SUBMERGEDFORT MYERS, FL	0	$0.00	$0.00	$0.00	$0.00
09-45-25-P2-002B4.0000	INC12750 CITRUS PARK	SUBMERGEDFORT MYERS, FL	0	$0.00	$0.00	$0.00	$0.00
09-45-25-P2-002B5.0000	INC12750 CITRUS PARK	SUBMERGEDFORT MYERS, FL	0	$0.00	$0.00	$0.00	$0.00
09-45-25-P2-002B6.0000	INC12750 CITRUS PARK	SUBMERGEDFORT MYERS, FL	0	$0.00	$0.00	$0.00	$0.00
09-45-25-P2-00300.1370	SA A11300 HIDALGO CTF	11300 HIDALGO CTFORT MYERS, FL 33912	SFA2	$12,121.00	$1,006.72	$1,599.18	$2,605.90
09-45-25-P2-00300.1380	NO BENITA M26 UPLAND	11304 HIDALGO CTFORT MYERS, FL 33912	SFA2	$12,121.00	$1,006.72	$1,599.18	$2,605.90
09-45-25-P2-00300.1390	BRA M2250 EVERGREEN	11306 HIDALGO CTFORT MYERS, FL 33912	SFA2	$12,121.00	$1,006.72	$1,599.18	$2,605.90
09-45-25-P2-00300.1400	0 WESTWOOD AVE SARN	11310 HIDALGO CTFORT MYERS, FL 33912	SFA2	$12,121.00	$1,006.72	$1,599.18	$2,605.90
09-45-25-P2-00300.1410	BORAH L H/W112 BLACK	11314 HIDALGO CTFORT MYERS, FL 33912	SFA2	$12,121.00	$1,006.72	$1,599.18	$2,605.90
09-45-25-P2-00300.1420	DITH A BALYEAT TRUST	11318 HIDALGO CTFORT MYERS, FL 33912	SFA2	$12,121.00	$1,006.72	$1,599.18	$2,605.90
09-45-25-P2-00300.1430	322 HIDALGO CTFORT MY	11322 HIDALGO CTFORT MYERS, FL 33912	SFA2	$12,121.00	$1,006.72	$1,599.18	$2,605.90
09-45-25-P2-00300.1440	ER REVOCABLE TRUST1	11326 HIDALGO CTFORT MYERS, FL 33912	SFA2	$12,121.00	$1,006.72	$1,599.18	$2,605.90
09-45-25-P2-00300.1450	REVOCABLE TRUST5301	11330 HIDALGO CTFORT MYERS, FL 33912	SFA2	$12,121.00	$1,006.72	$1,599.18	$2,605.90
09-45-25-P2-00300.1460	AHLEY TRUST107 STATE	11323 HIDALGO CTFORT MYERS, FL 33912	SFA2	$12,121.00	$1,006.72	$1,599.18	$2,605.90
09-45-25-P2-00300.1470	ERINE GREENE TRUST11	11319 HIDALGO CTFORT MYERS, FL 33912	SFA2	$12,121.00	$1,006.72	$1,599.18	$2,605.90
09-45-25-P2-00300.1480	CY11315 HIDALGO CTFO	11315 HIDALGO CTFORT MYERS, FL 33912	SFA2	$12,121.00	$1,006.72	$1,599.18	$2,605.90
09-45-25-P2-00300.1490	RANCES L11311 HIDALG	11311 HIDALGO CTFORT MYERS, FL 33912	SFA2	$12,121.00	$1,006.72	$1,599.18	$2,605.90
09-45-25-P2-00300.1500	RJORIE L H/W11305 HIDAL	11305 HIDALGO CTFORT MYERS, FL 33912	SFA2	$12,121.00	$1,006.72	$1,599.18	$2,605.90
09-45-25-P2-00300.1510	ATHLEEN M14542 W MELI	11301 HIDALGO CTFORT MYERS, FL 33912	SFA2	$12,121.00	$1,006.72	$1,599.18	$2,605.90
09-45-25-P2-00300.1520	L WEAVER TRUST11055 I	11055 ESTEBAN DRFORT MYERS, FL 33912	SFA2	$12,121.00	$1,006.72	$1,599.18	$2,605.90
09-45-25-P2-00300.1530	D9353 PRATOLINO VILLA	11051 ESTEBAN DRFORT MYERS, FL 33912	SFA2	$12,121.00	$1,006.72	$1,599.18	$2,605.90
09-45-25-P2-00300.1540	M LINDA F11047 ESTEBAN	11047 ESTEBAN DRFORT MYERS, FL 33912	SFA2	$12,121.00	$1,006.72	$1,599.18	$2,605.90

PASEO COMMUNITY DEVELOPMENT DISTRICT
2019 ASSESSMENT LIEN ROLL

STRAP	Owner	Site Address	LU	SERIES 2018 REMAINING PRINCIPAL (1)	SERIES 2018 DEBT SERVICE	O&M	TOTAL
09-45-25-P2-00300.1550	NA MARQUES11043 ESTE	11043 ESTEBAN DRFORT MYERS, FL 33912	SFA2	$12,121.00	$1,006.72	$1,599.18	$2,605.90
09-45-25-P2-00300.1560	A BERRY11035 ESTEBAN	11035 ESTEBAN DRFORT MYERS, FL 33912	SFA2	$12,121.00	$1,006.72	$1,599.18	$2,605.90
09-45-25-P2-00300.1570	N11027 ESTEBAN DRFORT	11027 ESTEBAN DRFORT MYERS, FL 33912	SFA2	$12,121.00	$1,006.72	$1,599.18	$2,605.90
09-45-25-P2-00300.1580	5 ESTEBAN DRFORT MYE	11015 ESTEBAN DRFORT MYERS, FL 33912	SFA2	$12,121.00	$1,006.72	$1,599.18	$2,605.90
09-45-25-P2-00300.1590	AS TRUST11001 ESTEBA	11001 ESTEBAN DRFORT MYERS, FL 33912	SFA2	$12,121.00	$1,006.72	$1,599.18	$2,605.90
09-45-25-P2-00300.1600	ANDRE NSAINTE-SABINE	10987 ESTEBAN DRFORT MYERS, FL 33912	SFA2	$12,121.00	$1,006.72	$1,599.18	$2,605.90
09-45-25-P2-00300.1610	RY E8501 MACARIO CTF	8501 MACARIO CTFORT MYERS, FL 33912	SFA2	$12,121.00	$1,006.72	$1,599.18	$2,605.90
09-45-25-P2-00300.1620	REA8505 MACARIO CTF	8505 MACARIO CTFORT MYERS, FL 33912	SFA2	$12,121.00	$1,006.72	$1,599.18	$2,605.90
09-45-25-P2-00300.1630	ONIO ZUFFELLATO8509 M	8509 MACARIO CTFORT MYERS, FL 33912	SFA2	$12,121.00	$1,006.72	$1,599.18	$2,605.90
09-45-25-P2-00300.1640	BERHARD LIVING TRUST	8506 MACARIO CTFORT MYERS, FL 33912	SFA2	$12,121.00	$1,006.72	$1,599.18	$2,605.90
09-45-25-P2-00300.1650	A OROURKE TRUST8502	8502 MACARIO CTFORT MYERS, FL 33912	SFA2	$12,121.00	$1,006.72	$1,599.18	$2,605.90
09-45-25-P2-00300.1660	MA MCGOURTY TRUST10	10975 ESTEBAN DRFORT MYERS, FL 33912	SFA2	$12,121.00	$1,006.72	$1,599.18	$2,605.90
09-45-25-P2-00300.1670	W TRFOR WHEELER TR	10967 ESTEBAN DRFORT MYERS, FL 33912	SFA2	$12,121.00	$1,006.72	$1,599.18	$2,605.90
09-45-25-P2-00300.1680	JLIA6212 SCHAEFER CIR	10959 ESTEBAN DRFORT MYERS, FL 33912	SFA2	$12,121.00	$1,006.72	$1,599.18	$2,605.90
09-45-25-P2-00300.1690	E10953 ESTEBAN DRFORT	10953 ESTEBAN DRFORT MYERS, FL 33912	SFA2	$12,121.00	$1,006.72	$1,599.18	$2,605.90
09-45-25-P2-00300.1700	HERYL DENISE10949 EST	10949 ESTEBAN DRFORT MYERS, FL 33912	SFA2	$12,121.00	$1,006.72	$1,599.18	$2,605.90
09-45-25-P2-00300.1710	0235613650 FIDDLESTICK	10945 ESTEBAN DRFORT MYERS, FL 33912	SFA2	$12,121.00	$1,006.72	$1,599.18	$2,605.90
09-45-25-P2-00300.1720	M10941 ESTEBAN DRFOR	10941 ESTEBAN DRFORT MYERS, FL 33912	SFA2	$12,121.00	$1,006.72	$1,599.18	$2,605.90
09-45-25-P2-00300.1730	2362 STATE RD 227 NORT	10940 ESTEBAN DRFORT MYERS, FL 33912	SFA2	$12,121.00	$1,006.72	$1,599.18	$2,605.90
09-45-25-P2-00300.1740	MELA S H/W10944 ESTEB	10944 ESTEBAN DRFORT MYERS, FL 33912	SFA2	$12,121.00	$1,006.72	$1,599.18	$2,605.90
09-45-25-P2-00300.1750	948 ESTEBAN DRFORT MY	10948 ESTEBAN DRFORT MYERS, FL 33912	SFA2	$12,121.00	$1,006.72	$1,599.18	$2,605.90
09-45-25-P2-00300.1760	IA A 1/2 T/C10952 ESTEBA	10952 ESTEBAN DRFORT MYERS, FL 33912	SFA2	$12,121.00	$1,006.72	$1,599.18	$2,605.90
09-45-25-P2-00300.1770	LER TRUST2252 ST ANDR	10956 ESTEBAN DRFORT MYERS, FL 33912	SFA2	$12,121.00	$1,006.72	$1,599.18	$2,605.90
09-45-25-P2-00300.1780	RLY A7312 STOCKWOOD	10960 ESTEBAN DRFORT MYERS, FL 33912	SFA2	$12,121.00	$1,006.72	$1,599.18	$2,605.90
09-45-25-P2-00300.1790	10964 ESTEBAN DRFORT	10964 ESTEBAN DRFORT MYERS, FL 33912	SFA2	$12,121.00	$1,006.72	$1,599.18	$2,605.90
09-45-25-P2-00300.1800	N JILL10968 ESTEBAN D	10968 ESTEBAN DRFORT MYERS, FL 33912	SFA2	$12,121.00	$1,006.72	$1,599.18	$2,605.90
09-45-25-P2-00300.1810	SHI WAY UNIT 186BURLIN	10972 ESTEBAN DRFORT MYERS, FL 33912	SFA2	$12,121.00	$1,006.72	$1,599.18	$2,605.90
09-45-25-P2-00300.1820	LEY L10976 ESTEBAN DR	10976 ESTEBAN DRFORT MYERS, FL 33912	SFA2	$12,121.00	$1,006.72	$1,599.18	$2,605.90
09-45-25-P2-00300.1830	PE BRITTANY J/T360 PEA	10980 ESTEBAN DRFORT MYERS, FL 33912	SFA2	$12,121.00	$1,006.72	$1,599.18	$2,605.90
09-45-25-P2-00300.1840	SHARON10984 ESTEBAN	10984 ESTEBAN DRFORT MYERS, FL 33912	SFA2	$12,121.00	$1,006.72	$1,599.18	$2,605.90
09-45-25-P2-00300.1850	E P10988 ESTEBAN DRFO	10988 ESTEBAN DRFORT MYERS, FL 33912	SFA2	$12,121.00	$1,006.72	$1,599.18	$2,605.90
09-45-25-P2-00300.1860	UREEN25 WINDING BRO	10992 ESTEBAN DRFORT MYERS, FL 33912	SFA2	$12,121.00	$1,006.72	$1,599.18	$2,605.90
09-45-25-P2-00300.1870	NA J/T16 SHERWOOD CTH	10996 ESTEBAN DRFORT MYERS, FL 33912	SFA2	$12,121.00	$1,006.72	$1,599.18	$2,605.90
09-45-25-P2-00300.1880	J23395 PINEWOOD RDDE	11000 ESTEBAN DRFORT MYERS, FL 33912	SFA2	$12,121.00	$1,006.72	$1,599.18	$2,605.90
09-45-25-P2-00300.1890	A TRFOR DEBRA MANCU	11004 ESTEBAN DRFORT MYERS, FL 33912	SFA2	$12,121.00	$1,006.72	$1,599.18	$2,605.90
09-45-25-P2-00300.1900	H7871 S ARGONNE STCEN	11008 ESTEBAN DRFORT MYERS, FL 33912	SFA2	$12,121.00	$1,006.72	$1,599.18	$2,605.90
09-45-25-P2-00300.1910	11012 ESTEBAN DRFORT	11012 ESTEBAN DRFORT MYERS, FL 33912	SFA2	$12,121.00	$1,006.72	$1,599.18	$2,605.90
09-45-25-P2-00300.1920	19 REGER RDSUCCASUN	11018 ESTEBAN DRFORT MYERS, FL 33912	SFA2	$12,121.00	$1,006.72	$1,599.18	$2,605.90
09-45-25-P2-00300.1930	MIMA H/W11022 ESTEBAN	11022 ESTEBAN DRFORT MYERS, FL 33912	SFA2	$12,121.00	$1,006.72	$1,599.18	$2,605.90
09-45-25-P2-00300.1940	NSULATE DR APT 2HTUC	11026 ESTEBAN DRFORT MYERS, FL 33912	SFA2	$12,121.00	$1,006.72	$1,599.18	$2,605.90
09-45-25-P2-00300.1950	RA11030 ESTEBAN DRFO	11030 ESTEBAN DRFORT MYERS, FL 33912	SFA2	$12,121.00	$1,006.72	$1,599.18	$2,605.90
09-45-25-P2-00300.1960	YN D11034 ESTEBAN DRF	11034 ESTEBAN DRFORT MYERS, FL 33912	SFA2	$12,121.00	$1,006.72	$1,599.18	$2,605.90
09-45-25-P2-00300.1970	ANDREA M11038 ESTEBA	11038 ESTEBAN DRFORT MYERS, FL 33912	SFA2	$12,121.00	$1,006.72	$1,599.18	$2,605.90
09-45-25-P2-00300.1980	TRFOR MORRIS TRUST11	11042 ESTEBAN DRFORT MYERS, FL 33912	SFA2	$12,121.00	$1,006.72	$1,599.18	$2,605.90
09-45-25-P2-00300.1990	RFORD TRUST1 COUNTR	11046 ESTEBAN DRFORT MYERS, FL 33912	SFA2	$12,121.00	$1,006.72	$1,599.18	$2,605.90
09-45-25-P2-00300.2000	UTH ELAINE11050 ESTEB	11050 ESTEBAN DRFORT MYERS, FL 33912	SFA2	$12,121.00	$1,006.72	$1,599.18	$2,605.90
09-45-25-P2-0030A.0100	INC12750 CITRUS PARK L	RIGHT OF WAYFORT MYERS, FL	0	$0.00	$0.00	$0.00	$0.00
09-45-25-P2-0030A.0200	INC12750 CITRUS PARK L	RIGHT OF WAYFORT MYERS, FL	0	$0.00	$0.00	$0.00	$0.00
09-45-25-P2-0030B.0100	INC12750 CITRUS PARK L	ESPERANZA @ PASEO C/EFORT MYERS, FL	0	$0.00	$0.00	$0.00	$0.00
09-45-25-P2-0030B.0200	INC12750 CITRUS PARK L	ESPERANZA @ PASEO C/EFORT MYERS, FL	0	$0.00	$0.00	$0.00	$0.00
09-45-25-P2-0030B.0300	INC12750 CITRUS PARK L	ESPERANZA @ PASEO C/EFORT MYERS, FL	0	$0.00	$0.00	$0.00	$0.00
09-45-25-P2-0030B.0400	INC12750 CITRUS PARK L	ESPERANZA @ PASEO C/EFORT MYERS, FL	0	$0.00	$0.00	$0.00	$0.00
09-45-25-P2-00500.2010	F JOANNE T KINGFIELD T	8603 FALISTO PLFORT MYERS, FL 33912	SFA2	$12,121.00	$1,006.72	$1,599.18	$2,605.90
09-45-25-P2-00500.2020	A R8609 FALISTO PLFORT	8609 FALISTO PLFORT MYERS, FL 33912	SFA2	$12,121.00	$1,006.72	$1,599.18	$2,605.90
09-45-25-P2-00500.2030	CHRISTINA6 TIMBER CT	8615 FALISTO PLFORT MYERS, FL 33912	SFA2	$12,121.00	$1,006.72	$1,599.18	$2,605.90
09-45-25-P2-00500.2040	A S8619 FALISTO PLFORT	8619 FALISTO PLFORT MYERS, FL 33912	SFA2	$12,121.00	$1,006.72	$1,599.18	$2,605.90
09-45-25-P2-00500.2050	EEN8623 FALISTO PLFORT	8623 FALISTO PLFORT MYERS, FL 33912	SFA2	$12,121.00	$1,006.72	$1,599.18	$2,605.90

PASEO COMMUNITY DEVELOPMENT DISTRICT
2019 ASSESSMENT LIEN ROLL

STRAP	Owner	Site Address	LU	SERIES 2018 REMAINING PRINCIPAL (1)	SERIES 2018 DEBT SERVICE	O&M	TOTAL
09-45-25-P2-00500.2060	CAROLE COLLIER35 8TH	8627 FALISTO PLFORT MYERS, FL 33912	SFA2	$12,121.00	$1,006.72	$1,599.18	$2,605.90
09-45-25-P2-00500.2070	SA M3538 138TH AVE SEE	8635 FALISTO PLFORT MYERS, FL 33912	SFA2	$12,121.00	$1,006.72	$1,599.18	$2,605.90
09-45-25-P2-00500.2080	SCOA 172 TAMBORE 2SAN	8639 FALISTO PLFORT MYERS, FL 33912	SFA2	$12,121.00	$1,006.72	$1,599.18	$2,605.90
09-45-25-P2-00500.2090	A M8643 FALISTO PLFORT	8643 FALISTO PLFORT MYERS, FL 33912	SFA2	$12,121.00	$1,006.72	$1,599.18	$2,605.90
09-45-25-P2-00500.2100	INI DIANA J8647 FALISTO	8647 FALISTO PLFORT MYERS, FL 33912	SFA2	$12,121.00	$1,006.72	$1,599.18	$2,605.90
09-45-25-P2-00500.2110	NN J/T8651 FALISTO PLFO	8651 FALISTO PLFORT MYERS, FL 33912	SFA2	$12,121.00	$1,006.72	$1,599.18	$2,605.90
09-45-25-P2-00500.2120	ENE A8640 FALISTO PLFO	8640 FALISTO PLFORT MYERS, FL 33912	SFA2	$12,121.00	$1,006.72	$1,599.18	$2,605.90
09-45-25-P2-00500.2130	CHOW TRUSTN37W26875	8636 FALISTO PLFORT MYERS, FL 33912	SFA2	$12,121.00	$1,006.72	$1,599.18	$2,605.90
09-45-25-P2-00500.2140	Y L8632 FALISTO PLFORT	8632 FALISTO PLFORT MYERS, FL 33912	SFA2	$12,121.00	$1,006.72	$1,599.18	$2,605.90
09-45-25-P2-00500.2150	RAH J8628 FALISTO PLFO	8628 FALISTO PLFORT MYERS, FL 33912	SFA2	$12,121.00	$1,006.72	$1,599.18	$2,605.90
09-45-25-P2-00500.2160	RAY BETH ANN451 PRUDI	8624 FALISTO PLFORT MYERS, FL 33912	SFA2	$12,121.00	$1,006.72	$1,599.18	$2,605.90
09-45-25-P2-00500.2170	620 FALISTO PLFORT MYI	8620 FALISTO PLFORT MYERS, FL 33912	SFA2	$12,121.00	$1,006.72	$1,599.18	$2,605.90
09-45-25-P2-00500.2180	N TRUST4190 W SOUTH F	8616 FALISTO PLFORT MYERS, FL 33912	SFA2	$12,121.00	$1,006.72	$1,599.18	$2,605.90
09-45-25-P2-00500.2190	G SANDRA ODEN8612 FA	8612 FALISTO PLFORT MYERS, FL 33912	SFA2	$12,121.00	$1,006.72	$1,599.18	$2,605.90
09-45-25-P2-00500.2200	LEOD FAMILY TRUST860	8608 FALISTO PLFORT MYERS, FL 33912	SFA2	$12,121.00	$1,006.72	$1,599.18	$2,605.90
09-45-25-P2-00500.2210	I KAREN L736 RICHLANI	8604 FALISTO PLFORT MYERS, FL 33912	SFA2	$12,121.00	$1,006.72	$1,599.18	$2,605.90
09-45-25-P2-00500.2220	HRISTINE LEE8600 FALIST	8600 FALISTO PLFORT MYERS, FL 33912	SFA2	$12,121.00	$1,006.72	$1,599.18	$2,605.90
09-45-25-P2-00500.2230	PP BARBARA APO BOX 40	11300 PASEO DRFORT MYERS, FL 33912	SFA2	$12,121.00	$1,006.72	$1,599.18	$2,605.90
09-45-25-P2-00500.2240	AROL A90 WYANDANCH	11308 PASEO DRFORT MYERS, FL 33912	SFA2	$12,121.00	$1,006.72	$1,599.18	$2,605.90
09-45-25-P2-00500.2250	RAH L11316 PASEO DRFO	11316 PASEO DRFORT MYERS, FL 33912	SFA2	$12,121.00	$1,006.72	$1,599.18	$2,605.90
09-45-25-P2-00500.2260	ERYL LYNNE23 DEERFIEL	11320 PASEO DRFORT MYERS, FL 33912	SFA2	$12,121.00	$1,006.72	$1,599.18	$2,605.90
09-45-25-P2-00500.2270	LISA NASSIF922 STONEBI	11324 PASEO DRFORT MYERS, FL 33912	SFA2	$12,121.00	$1,006.72	$1,599.18	$2,605.90
09-45-25-P2-00500.2280	N TAMARA LYNN11328 PA	11328 PASEO DRFORT MYERS, FL 33912	SFA2	$12,121.00	$1,006.72	$1,599.18	$2,605.90
09-45-25-P2-00500.2290	LEE11332 PASEO DRFORT	11332 PASEO DRFORT MYERS, FL 33912	SFA2	$12,121.00	$1,006.72	$1,599.18	$2,605.90
09-45-25-P2-00500.2300	E719 TURWILL LNKALAM	11336 PASEO DRFORT MYERS, FL 33912	SFA2	$12,121.00	$1,006.72	$1,599.18	$2,605.90
09-45-25-P2-00500.2310	IZABETH113 WATSON AV	11340 PASEO DRFORT MYERS, FL 33912	SFA2	$12,121.00	$1,006.72	$1,599.18	$2,605.90
09-45-25-P2-00500.2320	N M108 LISGAR ST # 7030	11344 PASEO DRFORT MYERS, FL 33912	SFA2	$12,121.00	$1,006.72	$1,599.18	$2,605.90
09-45-25-P2-00500.2330	TRUST11200 HEROLD HV	11348 PASEO DRFORT MYERS, FL 33912	SFA2	$12,121.00	$1,006.72	$1,599.18	$2,605.90
09-45-25-P2-00500.2340	OAKLAND DRBLOOMFIE	11352 PASEO DRFORT MYERS, FL 33912	SFA2	$12,121.00	$1,006.72	$1,599.18	$2,605.90
09-45-25-P2-00500.2350	1014 CLAIRMORE AVELA	11356 PASEO DRFORT MYERS, FL 33912	SFA2	$12,121.00	$1,006.72	$1,599.18	$2,605.90
09-45-25-P2-00500.2360	CY S108 REMINGTON WA	11360 PASEO DRFORT MYERS, FL 33912	SFA2	$12,121.00	$1,006.72	$1,599.18	$2,605.90
09-45-25-P2-00500.2370	EN ANNE G J/T1269 PARK	11364 PASEO DRFORT MYERS, FL 33912	SFA2	$12,121.00	$1,006.72	$1,599.18	$2,605.90
09-45-25-P2-00500.2380	140 ASHBOURNE DRWES	11361 PASEO DRFORT MYERS, FL 33912	SFA2	$12,121.00	$1,006.72	$1,599.18	$2,605.90
09-45-25-P2-00500.2390	IN FAMILY TRUST405 DEE	11357 PASEO DRFORT MYERS, FL 33912	SFA2	$12,121.00	$1,006.72	$1,599.18	$2,605.90
09-45-25-P2-00500.2400	DRAH7 WALLAND CTFARI	11353 PASEO DRFORT MYERS, FL 33912	SFA2	$12,121.00	$1,006.72	$1,599.18	$2,605.90
09-45-25-P2-00500.2410	A22 ANDREW LANETHOR	11349 PASEO DRFORT MYERS, FL 33912	SFA2	$12,121.00	$1,006.72	$1,599.18	$2,605.90
09-45-25-P2-00500.2420	LEEN M11341 PASEO DRFO	11341 PASEO DRFORT MYERS, FL 33912	SFA2	$12,121.00	$1,006.72	$1,599.18	$2,605.90
09-45-25-P2-00500.2430	0 SW GEMINI DR # 6746B	8627 RENATA CTFORT MYERS, FL 33912	SFA2	$12,121.00	$1,006.72	$1,599.18	$2,605.90
09-45-25-P2-00500.2440	R KATHLEEN A378 BRADI	8631 RENATA CTFORT MYERS, FL 33912	SFA2	$12,121.00	$1,006.72	$1,599.18	$2,605.90
09-45-25-P2-00500.2450	D11 WINDAWAY RDBETH	8635 RENATA CTFORT MYERS, FL 33912	SFA2	$12,121.00	$1,006.72	$1,599.18	$2,605.90
09-45-25-P2-00500.2460	E F8638 RENATA CTFORT M	8638 RENATA CTFORT MYERS, FL 33912	SFA2	$12,121.00	$1,006.72	$1,599.18	$2,605.90
09-45-25-P2-00500.2470	RMA B56 RISLOVES WAY	8634 RENATA CTFORT MYERS, FL 33912	SFA2	$12,121.00	$1,006.72	$1,599.18	$2,605.90
09-45-25-P2-00500.2480	2014 FLORIDA TRUST863	8630 RENATA CTFORT MYERS, FL 33912	SFA2	$12,121.00	$1,006.72	$1,599.18	$2,605.90
09-45-25-P2-00500.2490	ES8626 RENATA CTFORT	8626 RENATA CTFORT MYERS, FL 33912	SFA2	$12,121.00	$1,006.72	$1,599.18	$2,605.90
09-45-25-P2-00500.2500	Y8622 RENATA CTFORT M	8622 RENATA CTFORT MYERS, FL 33912	SFA2	$12,121.00	$1,006.72	$1,599.18	$2,605.90
09-45-25-P2-00500.2510	1321 PASEO DRFORT MYI	11321 PASEO DRFORT MYERS, FL 33912	SFA2	$12,121.00	$1,006.72	$1,599.18	$2,605.90
09-45-25-P2-00500.2520	M335 BRIDGE ST NW # 22	11317 PASEO DRFORT MYERS, FL 33912	SFA2	$12,121.00	$1,006.72	$1,599.18	$2,605.90
09-45-25-P2-00500.2530	22 HARPER RDMONMOU	11313 PASEO DRFORT MYERS, FL 33912	SFA2	$12,121.00	$1,006.72	$1,599.18	$2,605.90
09-45-25-P2-00500.2540	WN11309 PASEO DRFORT	11309 PASEO DRFORT MYERS, FL 33912	SFA2	$12,121.00	$1,006.72	$1,599.18	$2,605.90
09-45-25-P2-00500.2550	DIO KATHY J11305 PASEO	11305 PASEO DRFORT MYERS, FL 33912	SFA2	$12,121.00	$1,006.72	$1,599.18	$2,605.90
09-45-25-P2-00500.2560	1301 PASEO DRFORT MYI	11301 PASEO DRFORT MYERS, FL 33912	SFA2	$12,121.00	$1,006.72	$1,599.18	$2,605.90
09-45-25-P2-0050A.0000	INC12750 CITRUS PARK L	RIGHT OF WAYFORT MYERS, FL 33912	0	$0.00	$0.00	$0.00	$0.00
09-45-25-P2-005B1.0000	INC12750 CITRUS PARK L	RIGHT OF WAYFORT MYERS, FL 33912	0	$0.00	$0.00	$0.00	$0.00
09-45-25-P2-005B2.0000	INC12750 CITRUS PARK L	RIGHT OF WAYFORT MYERS, FL 33912	0	$0.00	$0.00	$0.00	$0.00
09-45-25-P2-005B3.0000	INC12750 CITRUS PARK L	RIGHT OF WAYFORT MYERS, FL 33912	0	$0.00	$0.00	$0.00	$0.00
09-45-25-P3-00100.0710	CY H/W15480 BLACKHAV	8227 PROVENCIA CTFORT MYERS, FL 33912	SFA1	$11,881.00	$1,006.72	$1,599.18	$2,605.90
09-45-25-P3-00100.0720	O9658 N 1175 WMONTICE	8223 PROVENCIA CTFORT MYERS, FL 33912	SFA1	$11,881.00	$1,006.72	$1,599.18	$2,605.90

PASEO COMMUNITY DEVELOPMENT DISTRICT
2019 ASSESSMENT LIEN ROLL

STRAP	Owner	Site Address	LU	SERIES 2018 REMAINING PRINCIPAL (1)	SERIES 2018 DEBT SERVICE	O&M	TOTAL
09-45-25-P3-00100.0920	TI CYNTHIA A8601 MERC	8601 MERCADO CTFORT MYERS, FL 33912	SFA1	$11,881.00	$1,006.72	$1,599.18	$2,605.90
09-45-25-P3-00100.0930	8607 MERCADO CTFORT	8607 MERCADO CTFORT MYERS, FL 33912	SFA1	$11,881.00	$1,006.72	$1,599.18	$2,605.90
09-45-25-P3-00100.0940	ARILYN A LATELL TRUST	8613 MERCADO CTFORT MYERS, FL 33912	SFA1	$11,881.00	$1,006.72	$1,599.18	$2,605.90
09-45-25-P3-00100.0950	R8619 MERCADO CTFORT	8619 MERCADO CTFORT MYERS, FL 33912	SFA1	$11,881.00	$1,006.72	$1,599.18	$2,605.90
09-45-25-P3-00100.0960	LE A3 WAGON TRAIL RDS	8623 MERCADO CTFORT MYERS, FL 33912	SFA1	$11,881.00	$1,006.72	$1,599.18	$2,605.90
09-45-25-P3-00100.0970	FOR KATHY SARMAZIAN	8629 MERCADO CTFORT MYERS, FL 33912	SFA1	$11,881.00	$1,006.72	$1,599.18	$2,605.90
09-45-25-P3-00100.0980	G8637 MERCADO CTFORT	8637 MERCADO CTFORT MYERS, FL 33912	SFA1	$11,881.00	$1,006.72	$1,599.18	$2,605.90
09-45-25-P3-00100.0990	JANICE27 PIZZULLO RD	8645 MERCADO CTFORT MYERS, FL 33912	SFA1	$11,881.00	$1,006.72	$1,599.18	$2,605.90
09-45-25-P3-00100.1000	04 SUNSET LAKE CIRBUR	8651 MERCADO CTFORT MYERS, FL 33912	SFA1	$11,881.00	$1,006.72	$1,599.18	$2,605.90
09-45-25-P3-00100.1010	CABLE TRUST8657 MERC	8657 MERCADO CTFORT MYERS, FL 33912	SFA1	$11,881.00	$1,006.72	$1,599.18	$2,605.90
09-45-25-P3-00100.1020	Y M55298 LORDONA LNS	8661 MERCADO CTFORT MYERS, FL 33912	SFA1	$11,881.00	$1,006.72	$1,599.18	$2,605.90
09-45-25-P3-00100.1030	DERHILL AVE APT 1BWES	8665 MERCADO CTFORT MYERS, FL 33912	SFA1	$11,881.00	$1,006.72	$1,599.18	$2,605.90
09-45-25-P3-00100.1040	O LUCIA A J/T40 HERITAG	8671 MERCADO CTFORT MYERS, FL 33912	SFA1	$11,881.00	$1,006.72	$1,599.18	$2,605.90
09-45-25-P3-00100.1050	ANDERSON WAYMONM	8677 MERCADO CTFORT MYERS, FL 33912	SFA2	$12,121.00	$1,006.72	$1,599.18	$2,605.90
09-45-25-P3-00100.1060	NSTREET BOX 58KRONA	8683 MERCADO CTFORT MYERS, FL 33912	SFA1	$11,881.00	$1,006.72	$1,599.18	$2,605.90
09-45-25-P3-00100.1070	688 MERCADO COURTFO	8688 MERCADO CTFORT MYERS, FL 33912	SFA1	$11,881.00	$1,006.72	$1,599.18	$2,605.90
09-45-25-P3-00100.1080	AMOLU TRUST8682 MER	8682 MERCADO CTFORT MYERS, FL 33912	SFA1	$11,881.00	$1,006.72	$1,599.18	$2,605.90
09-45-25-P3-00100.1090	ANNA8676 MERCADO CT	8676 MERCADO CTFORT MYERS, FL 33912	SFA1	$11,881.00	$1,006.72	$1,599.18	$2,605.90
09-45-25-P3-00100.1100	HURCH TRUST3303 FORES	8670 MERCADO CTFORT MYERS, FL 33912	SFA1	$11,881.00	$1,006.72	$1,599.18	$2,605.90
09-45-25-P3-00100.1110	SUTLEY LIVING TRUST64	8664 MERCADO CTFORT MYERS, FL 33912	SFA1	$11,881.00	$1,006.72	$1,599.18	$2,605.90
09-45-25-P3-00100.1120	INDA1377 STOWE AVEGR	8658 MERCADO CTFORT MYERS, FL 33912	SFA1	$11,881.00	$1,006.72	$1,599.18	$2,605.90
09-45-25-P3-00100.1130	BRAD T/C3455 HUNTINGT	8652 MERCADO CTFORT MYERS, FL 33912	SFA1	$11,881.00	$1,006.72	$1,599.18	$2,605.90
09-45-25-P3-00100.1140	FOR LISA SARMAZIAN TI	8646 MERCADO CTFORT MYERS, FL 33912	SFA1	$11,881.00	$1,006.72	$1,599.18	$2,605.90
09-45-25-P3-00100.1150	8640 MERCADO CTFORT	8640 MERCADO CTFORT MYERS, FL 33912	SFA1	$11,881.00	$1,006.72	$1,599.18	$2,605.90
09-45-25-P3-00100.1160	VONNE M5 CLINTON SQ	8634 MERCADO CTFORT MYERS, FL 33912	SFA1	$11,881.00	$1,006.72	$1,599.18	$2,605.90
09-45-25-P3-00100.1170	EA FAMILY TRUST400 YO	8628 MERCADO CTFORT MYERS, FL 33912	SFA1	$11,881.00	$1,006.72	$1,599.18	$2,605.90
09-45-25-P3-00100.1180	R MARY ANN CLEMMER T	8622 MERCADO CTFORT MYERS, FL 33912	SFA1	$11,881.00	$1,006.72	$1,599.18	$2,605.90
09-45-25-P3-00100.1190	N SHARON E8616 MERCA	8616 MERCADO CTFORT MYERS, FL 33912	SFA1	$11,881.00	$1,006.72	$1,599.18	$2,605.90
09-45-25-P3-00100.1200	MCCAFFERY TRUST8610	8610 MERCADO CTFORT MYERS, FL 33912	SFA1	$11,881.00	$1,006.72	$1,599.18	$2,605.90
09-45-25-P3-00100.1210	TT V BONWELL TRUST35	8799 SARITA CTFORT MYERS, FL 33912	SFA1	$11,881.00	$1,006.72	$1,599.18	$2,605.90
09-45-25-P3-00100.1220	NE DANDREA TRUST697	8805 SARITA CTFORT MYERS, FL 33912	SFA1	$11,881.00	$1,006.72	$1,599.18	$2,605.90
09-45-25-P3-00100.1230	ATHLEEN H/W104 N BER	8809 SARITA CTFORT MYERS, FL 33912	SFA2	$12,121.00	$1,006.72	$1,599.18	$2,605.90
09-45-25-P3-00100.1240	M L/E8813 SARITA CTFOR	8813 SARITA CTFORT MYERS, FL 33912	SFA1	$11,881.00	$1,006.72	$1,599.18	$2,605.90
09-45-25-P3-00100.1250	NDRA L J/T341 MACALLE	8817 SARITA CTFORT MYERS, FL 33912	SFA1	$11,881.00	$1,006.72	$1,599.18	$2,605.90
09-45-25-P3-00100.1260	EDITH M8819 SARITA CT	8819 SARITA CTFORT MYERS, FL 33912	SFA2	$12,121.00	$1,006.72	$1,599.18	$2,605.90
09-45-25-P3-00100.1270	ELAINE M L/E8823 SARITA	8823 SARITA CTFORT MYERS, FL 33912	SFA1	$11,881.00	$1,006.72	$1,599.18	$2,605.90
09-45-25-P3-00100.1280	NN KIRSCHNER TRUST24	8829 SARITA CTFORT MYERS, FL 33912	SFA2	$12,121.00	$1,006.72	$1,599.18	$2,605.90
09-45-25-P3-00100.1290	NET D8835 SARITA CTFO	8835 SARITA CTFORT MYERS, FL 33912	SFA1	$11,881.00	$1,006.72	$1,599.18	$2,605.90
09-45-25-P3-00100.1300	A8841 SARITA CTFORT M	8841 SARITA CTFORT MYERS, FL 33912	SFA1	$11,881.00	$1,006.72	$1,599.18	$2,605.90
09-45-25-P3-00100.1310	R MIRR TRUST8847 SARI	8847 SARITA CTFORT MYERS, FL 33912	SFA1	$11,881.00	$1,006.72	$1,599.18	$2,605.90
09-45-25-P3-00100.1320	N M8854 SARITA CTFORT	8854 SARITA CTFORT MYERS, FL 33912	SFA1	$11,881.00	$1,006.72	$1,599.18	$2,605.90
09-45-25-P3-00100.1330	48 SARITA CTFORT MYER	8848 SARITA CTFORT MYERS, FL 33912	SFA1	$11,881.00	$1,006.72	$1,599.18	$2,605.90
09-45-25-P3-00100.1340	UST 1/2FOR VICTORIA D	8842 SARITA CTFORT MYERS, FL 33912	SFA1	$11,881.00	$1,006.72	$1,599.18	$2,605.90
09-45-25-P3-00100.1350	PAL K8836 SARITA CTFOR	8836 SARITA CTFORT MYERS, FL 33912	SFA1	$11,881.00	$1,006.72	$1,599.18	$2,605.90
09-45-25-P3-00100.1360	KLEINKORT REV TRUST	8830 SARITA CTFORT MYERS, FL 33912	SFA1	$11,881.00	$1,006.72	$1,599.18	$2,605.90
09-45-25-P3-00100.1370	RUSEMARK TRUST1000 S	8824 SARITA CTFORT MYERS, FL 33912	SFA1	$11,881.00	$1,006.72	$1,599.18	$2,605.90
09-45-25-P3-00100.1380	RY L1632 51ST STREET S	8818 SARITA CTFORT MYERS, FL 33912	SFA1	$11,881.00	$1,006.72	$1,599.18	$2,605.90
09-45-25-P3-00100.1390	R PATRICIA S8812 SARITA	8812 SARITA CTFORT MYERS, FL 33912	SFA1	$11,881.00	$1,006.72	$1,599.18	$2,605.90
09-45-25-P3-00100.1400	23344 SUNSET BEACH TR	8806 SARITA CTFORT MYERS, FL 33912	SFA1	$11,881.00	$1,006.72	$1,599.18	$2,605.90
09-45-25-P3-00100.1410	NTHIA M J/T500 YORK ST	8800 SARITA CTFORT MYERS, FL 33912	SFA1	$11,881.00	$1,006.72	$1,599.18	$2,605.90
09-45-25-P3-0010A.0010	INC12750 CITRUS PARK L	11980 PASEO GRANDE BLVDFORT MYERS, FL	0	$0.00	$0.00	$0.00	$0.00
09-45-25-P3-0010A.0200	INC12750 CITRUS PARK L	RIGHT OF WAYFORT MYERS, FL	0	$0.00	$0.00	$0.00	$0.00
09-45-25-P3-0010A.0300	INC12750 CITRUS PARK L	RIGHT OF WAYFORT MYERS, FL	0	$0.00	$0.00	$0.00	$0.00
09-45-25-P3-0010C.0060	INC12750 CITRUS PARK L	SUBMERGEDFORT MYERS, FL	0	$0.00	$0.00	$0.00	$0.00
09-45-25-P3-0010C.0070	INC12750 CITRUS PARK L	SUBMERGEDFORT MYERS, FL	0	$0.00	$0.00	$0.00	$0.00
09-45-25-P3-0010C.0080	INC12750 CITRUS PARK L	SUBMERGEDFORT MYERS, FL	0	$0.00	$0.00	$0.00	$0.00
09-45-25-P3-0010C.0090	INC12750 CITRUS PARK L	SUBMERGEDFORT MYERS, FL	0	$0.00	$0.00	$0.00	$0.00

PASEO COMMUNITY DEVELOPMENT DISTRICT
2019 ASSESSMENT LIEN ROLL

STRAP	Owner	Site Address	LU	SERIES 2018 REMAINING PRINCIPAL (1)	SERIES 2018 DEBT SERVICE	O&M	TOTAL
09-45-25-P3-0010C.0100	INC12750 CITRUS PARK L	SUBMERGEDFORT MYERS, FL	0	$0.00	$0.00	$0.00	$0.00
09-45-25-P3-0010D.0010	INC12750 CITRUS PARK	PASEO C/EFORT MYERS, FL	0	$0.00	$0.00	$0.00	$0.00
09-45-25-P3-0010E.0010	INC12750 CITRUS PARK L	PASEO C/EFORT MYERS, FL	0	$0.00	$0.00	$0.00	$0.00
09-45-25-P3-0010E.0020	INC12750 CITRUS PARK L	PASEO C/EFORT MYERS, FL	0	$0.00	$0.00	$0.00	$0.00
09-45-25-P3-0010E.0030	INC12750 CITRUS PARK L	PASEO C/EFORT MYERS, FL	0	$0.00	$0.00	$0.00	$0.00
09-45-25-P3-0010E.0040	INC12750 CITRUS PARK L	PASEO C/EFORT MYERS, FL	0	$0.00	$0.00	$0.00	$0.00
09-45-25-P3-0010E.0070	INC12750 CITRUS PARK L	PASEO C/EFORT MYERS, FL	0	$0.00	$0.00	$0.00	$0.00
09-45-25-P3-0010E.0080	INC12750 CITRUS PARK L	PASEO C/EFORT MYERS, FL	0	$0.00	$0.00	$0.00	$0.00
09-45-25-P3-00200.4001	A40 STORM DRHOLTSVILI	11947 TULIO WAY 4001FORT MYERS, FL 33912	MFA1	$5,940.00	$503.37	$1,671.27	$2,174.64
09-45-25-P3-00200.4002	D11947 TULIO WAY # 4002	11947 TULIO WAY 4002FORT MYERS, FL 33912	MFA1	$5,940.00	$503.37	$1,671.27	$2,174.64
09-45-25-P3-00200.4003	VINTON CTWEST DUNDE	11947 TULIO WAY 4003FORT MYERS, FL 33912	MFA1	$5,940.00	$503.37	$1,671.27	$2,174.64
09-45-25-P3-00200.4004	IR HILL RD APT 21NORWA	11947 TULIO WAY 4004FORT MYERS, FL 33912	MFA1	$5,940.00	$503.37	$1,671.27	$2,174.64
09-45-25-P3-00200.4005	LYN35 GREYCOURT AVEC	11947 TULIO WAY 4005FORT MYERS, FL 33912	MFA1	$5,940.00	$503.37	$1,671.27	$2,174.64
09-45-25-P3-00200.4006	NANCY ET AL103 DUNMO	11947 TULIO WAY 4006FORT MYERS, FL 33912	MFA1	$5,940.00	$503.37	$1,671.27	$2,174.64
09-45-25-P3-00200.4101	%FOR VALERIE TROY TRU	1920 PASEO GRANDE BLVD 4101FORT MYERS, FL 33912	MFA1	$5,940.00	$503.37	$1,671.27	$2,174.64
09-45-25-P3-00200.4102	RIEN DENNIS J + SANDRA	1920 PASEO GRANDE BLVD 4102FORT MYERS, FL 33912	MFA1	$5,940.00	$503.37	$1,671.27	$2,174.64
09-45-25-P3-00200.4103	CALDER STPAWTUCKET	1920 PASEO GRANDE BLVD 4103FORT MYERS, FL 33912	MFA1	$5,940.00	$503.37	$1,671.27	$2,174.64
09-45-25-P3-00200.4104	RUST11920 PASEO GRAN	1920 PASEO GRANDE BLVD 4104FORT MYERS, FL 33912	MFA1	$5,940.00	$503.37	$1,671.27	$2,174.64
09-45-25-P3-00200.4105	GRANDE BLVD #4105FO	1920 PASEO GRANDE BLVD 4105FORT MYERS, FL 33912	MFA1	$5,940.00	$503.37	$1,671.27	$2,174.64
09-45-25-P3-00200.4106	R D & Z REVOCABLE TR	1920 PASEO GRANDE BLVD 4106FORT MYERS, FL 33912	MFA1	$5,940.00	$503.37	$1,671.27	$2,174.64
09-45-25-P3-00200.4107	GRANDE BLVD #4107FO	1920 PASEO GRANDE BLVD 4107FORT MYERS, FL 33912	MFA1	$5,940.00	$503.37	$1,671.27	$2,174.64
09-45-25-P3-00200.4108	GRANDE BLVD #4108FO	1920 PASEO GRANDE BLVD 4108FORT MYERS, FL 33912	MFA1	$5,940.00	$503.37	$1,671.27	$2,174.64
09-45-25-P3-00200.4109	SEO GRANDE BLVD#4109	1920 PASEO GRANDE BLVD 4109FORT MYERS, FL 33912	MFA1	$5,940.00	$503.37	$1,671.27	$2,174.64
09-45-25-P3-00200.4110	IMA A J/T295 FELDSPAR F	1920 PASEO GRANDE BLVD 4110FORT MYERS, FL 33912	MFA1	$5,940.00	$503.37	$1,671.27	$2,174.64
09-45-25-P3-00200.4111	28-525 BEECHWOOD DR	1920 PASEO GRANDE BLVD 4111FORT MYERS, FL 33912	MFA1	$5,940.00	$503.37	$1,671.27	$2,174.64
09-45-25-P3-00200.4112	295 LAKEMONT CTMURR	1920 PASEO GRANDE BLVD 4112FORT MYERS, FL 33912	MFA1	$5,940.00	$503.37	$1,671.27	$2,174.64
09-45-25-P3-00200.4201	CKIE J/T806 SYER DRMIL	11889 TULIO WAY 4201FORT MYERS, FL 33912	MFA1	$5,940.00	$503.37	$1,671.27	$2,174.64
09-45-25-P3-00200.4202	AH A6 STONE BRIAR DRL	11889 TULIO WAY 4202FORT MYERS, FL 33912	MFA1	$5,940.00	$503.37	$1,671.27	$2,174.64
09-45-25-P3-00200.4203	89 TULIO WAY#4203FORT	11889 TULIO WAY 4203FORT MYERS, FL 33912	MFA1	$5,940.00	$503.37	$1,671.27	$2,174.64
09-45-25-P3-00200.4204	LD11889 TULIO WAY #420	11889 TULIO WAY 4204FORT MYERS, FL 33912	MFA1	$0.00	$0.00	$1,671.27	$1,671.27
09-45-25-P3-00200.4205	M11889 TULIO WAY #4205	11889 TULIO WAY 4205FORT MYERS, FL 33912	MFA1	$5,940.00	$503.37	$1,671.27	$2,174.64
09-45-25-P3-00200.4301	Y M H/W64 DEACON HAY	1890 PASEO GRANDE BLVD 4301FORT MYERS, FL 33912	MFA1	$5,940.00	$503.37	$1,671.27	$2,174.64
09-45-25-P3-00200.4302	N5935 SOVEREIGN DRWI	1890 PASEO GRANDE BLVD 4302FORT MYERS, FL 33912	MFA1	$5,940.00	$503.37	$1,671.27	$2,174.64
09-45-25-P3-00200.4303	S TRUST11890 PASEO GR	1890 PASEO GRANDE BLVD 4303FORT MYERS, FL 33912	MFA1	$5,940.00	$503.37	$1,671.27	$2,174.64
09-45-25-P3-00200.4304	EO GRANDE BLVD#4304F	1890 PASEO GRANDE BLVD 4304FORT MYERS, FL 33912	MFA1	$5,940.00	$503.37	$1,671.27	$2,174.64
09-45-25-P3-00200.4305	O BOX 211BRIGHTWATER	1890 PASEO GRANDE BLVD 4305FORT MYERS, FL 33912	MFA1	$5,940.00	$503.37	$1,671.27	$2,174.64
09-45-25-P3-00200.4401	I 1/2 T/C11861 TULIO WAY	11861 TULIO WAY 4401FORT MYERS, FL 33912	MFA2	$6,060.00	$503.37	$1,671.27	$2,174.64
09-45-25-P3-00200.4402	+ DIANE23 WALKER DRC	11861 TULIO WAY 4402FORT MYERS, FL 33912	MFA2	$6,060.00	$503.37	$1,671.27	$2,174.64
09-45-25-P3-00200.4403	748-9C SMOKY HILL RD #	11861 TULIO WAY 4403FORT MYERS, FL 33912	MFA2	$6,060.00	$503.37	$1,671.27	$2,174.64
09-45-25-P3-00200.4404	1 TULIO WAY # 4404FORT	11861 TULIO WAY 4404FORT MYERS, FL 33912	MFA2	$6,060.00	$503.37	$1,671.27	$2,174.64
09-45-25-P3-00200.4405	USAN L58 E GLEN DRTAU	11861 TULIO WAY 4405FORT MYERS, FL 33912	MFA2	$6,060.00	$503.37	$1,671.27	$2,174.64
09-45-25-P3-00200.4501	H + SHARON R PURNELL	1860 PASEO GRANDE BLVD 4501FORT MYERS, FL 33912	MFA1	$5,940.00	$503.37	$1,671.27	$2,174.64
09-45-25-P3-00200.4502	TRUST11860 PASEO GRA	1860 PASEO GRANDE BLVD 4502FORT MYERS, FL 33912	MFA1	$0.00	$0.00	$1,671.27	$1,671.27
09-45-25-P3-00200.4503	UST11860 PASEO GRAND	1860 PASEO GRANDE BLVD 4503FORT MYERS, FL 33912	MFA1	$5,940.00	$503.37	$1,671.27	$2,174.64
09-45-25-P3-00200.4504	NDER + ERIC TOLIC TRU	1860 PASEO GRANDE BLVD 4504FORT MYERS, FL 33912	MFA1	$5,940.00	$503.37	$1,671.27	$2,174.64
09-45-25-P3-00200.4505	1860 PASEO GRANDE BLV	1860 PASEO GRANDE BLVD 4505FORT MYERS, FL 33912	MFA1	$5,940.00	$503.37	$1,671.27	$2,174.64
09-45-25-P3-00200.4601	AN M326 RIVER KNOLL D	1830 PASEO GRANDE BLVD 4601FORT MYERS, FL 33912	MFA2	$6,060.00	$503.37	$1,671.27	$2,174.64
09-45-25-P3-00200.4602	TE H/W11830 PASEO GRA	1830 PASEO GRANDE BLVD 4602FORT MYERS, FL 33912	MFA2	$6,060.00	$503.37	$1,671.27	$2,174.64
09-45-25-P3-00200.4603	DI TRUST11830 PASEO GR	1830 PASEO GRANDE BLVD 4603FORT MYERS, FL 33912	MFA2	$6,060.00	$503.37	$1,671.27	$2,174.64
09-45-25-P3-00200.4604	0 PASEO GRANDE BLVD #	1830 PASEO GRANDE BLVD 4604FORT MYERS, FL 33912	MFA2	$6,060.00	$503.37	$1,671.27	$2,174.64
09-45-25-P3-00200.4605	03 5TH AVE STE 1205NEW	1830 PASEO GRANDE BLVD 4605FORT MYERS, FL 33912	MFA2	$6,060.00	$503.37	$1,671.27	$2,174.64
09-45-25-P3-00200.4606	OMPANY770 W GLADYS	1830 PASEO GRANDE BLVD 4606FORT MYERS, FL 33912	MFA2	$6,060.00	$503.37	$1,671.27	$2,174.64
09-45-25-P3-00200.4607	EO GRANDE BLVD #4607F	1830 PASEO GRANDE BLVD 4607FORT MYERS, FL 33912	MFA2	$6,060.00	$503.37	$1,671.27	$2,174.64
09-45-25-P3-00200.4608	A181 BLIGH STTEWKSBU	1830 PASEO GRANDE BLVD 4608FORT MYERS, FL 33912	MFA2	$6,060.00	$503.37	$1,671.27	$2,174.64
09-45-25-P3-00200.4609	3 ST CLAIR CTPRINCETO	1830 PASEO GRANDE BLVD 4609FORT MYERS, FL 33912	MFA2	$6,060.00	$503.37	$1,671.27	$2,174.64
09-45-25-P3-00200.4610	URA H H/W9337 LONGSTO	1830 PASEO GRANDE BLVD 4610FORT MYERS, FL 33912	MFA2	$6,060.00	$503.37	$1,671.27	$2,174.64
09-45-25-P3-00200.4611	ARY C2196 FOX CHASE RI	1830 PASEO GRANDE BLVD 4611FORT MYERS, FL 33912	MFA2	$6,060.00	$503.37	$1,671.27	$2,174.64

PASEO COMMUNITY DEVELOPMENT DISTRICT
2019 ASSESSMENT LIEN ROLL

STRAP	Owner	Site Address	LU	SERIES 2018 REMAINING PRINCIPAL (1)	SERIES 2018 DEBT SERVICE	O&M	TOTAL
09-45-25-P3-00200.4612	NY J/T11751 ROSALINDA	1830 PASEO GRANDE BLVD 4612FORT MYERS, FL 33912	MFA2	$6,060.00	$503.37	$1,671.27	$2,174.64
09-45-25-P3-00200.4701	SEO GRANDE BLVD #470	1796 PASEO GRANDE BLVD 4701FORT MYERS, FL 33912	MFA2	$6,060.00	$503.37	$1,671.27	$2,174.64
09-45-25-P3-00200.4702	T11796 PASEO GRANDE I	1796 PASEO GRANDE BLVD 4702FORT MYERS, FL 33912	MFA2	$6,060.00	$503.37	$1,671.27	$2,174.64
09-45-25-P3-00200.4703	EATHERTON DRFARMING	1796 PASEO GRANDE BLVD 4703FORT MYERS, FL 33912	MFA2	$6,060.00	$503.37	$1,671.27	$2,174.64
09-45-25-P3-00200.4704	2122 MISSISSIPPI DRCHA	1796 PASEO GRANDE BLVD 4704FORT MYERS, FL 33912	MFA2	$6,060.00	$503.37	$1,671.27	$2,174.64
09-45-25-P3-00200.4705	RBARA12 DEERFIELD TER	1796 PASEO GRANDE BLVD 4705FORT MYERS, FL 33912	MFA2	$6,060.00	$503.37	$1,671.27	$2,174.64
09-45-25-P3-00200.4706	RITZ TRUST9785 SHENAN	1796 PASEO GRANDE BLVD 4706FORT MYERS, FL 33912	MFA2	$6,060.00	$503.37	$1,671.27	$2,174.64
09-45-25-P3-00200.4707	ALOSI ELIZABETH H/W2 A	1796 PASEO GRANDE BLVD 4707FORT MYERS, FL 33912	MFA2	$6,060.00	$503.37	$1,671.27	$2,174.64
09-45-25-P3-00200.4708	AL11796 PASEO GRANDE	1796 PASEO GRANDE BLVD 4708FORT MYERS, FL 33913	MFA2	$6,060.00	$503.37	$1,671.27	$2,174.64
09-45-25-P3-00200.4709	A REVOCABLE TRUST775	1796 PASEO GRANDE BLVD 4709FORT MYERS, FL 33912	MFA2	$6,060.00	$503.37	$1,671.27	$2,174.64
09-45-25-P3-00200.4710	N ET AL11796 PASEO GRA	1796 PASEO GRANDE BLVD 4710FORT MYERS, FL 33912	MFA2	$6,060.00	$503.37	$1,671.27	$2,174.64
09-45-25-P3-00200.4711	500 BOUL SAINT-MARTIN	1796 PASEO GRANDE BLVD 4711FORT MYERS, FL 33912	MFA2	$6,060.00	$503.37	$1,671.27	$2,174.64
09-45-25-P3-00200.4712	SEO GRANDE BLVD#4712	1796 PASEO GRANDE BLVD 4712FORT MYERS, FL 33912	MFA2	$6,060.00	$503.37	$1,671.27	$2,174.64
09-45-25-P3-00200.4801	TEINHILBER TRUST1154	11767 TULIO WAY 4801FORT MYERS, FL 33912	MFA2	$6,060.00	$503.37	$1,671.27	$2,174.64
09-45-25-P3-00200.4802	16 ORCHARD CIRNAPERV	11767 TULIO WAY 4802FORT MYERS, FL 33912	MFA2	$6,060.00	$503.37	$1,671.27	$2,174.64
09-45-25-P3-00200.4803	L R J/T11767 TULIO WAY	11767 TULIO WAY 4803FORT MYERS, FL 33912	MFA2	$6,060.00	$503.37	$1,671.27	$2,174.64
09-45-25-P3-00200.4804	M11767 TULIO WAY # 48	11767 TULIO WAY 4804FORT MYERS, FL 33912	MFA2	$6,060.00	$503.37	$1,671.27	$2,174.64
09-45-25-P3-00200.4805	INGS TRUST185 KISCO AV	11767 TULIO WAY 4805FORT MYERS, FL 33912	MFA2	$6,060.00	$503.37	$1,671.27	$2,174.64
09-45-25-P3-00200.4901	M T JR32 GROVE STCUBA	1768 PASEO GRANDE BLVD 4901FORT MYERS, FL 33912	MFA2	$6,060.00	$503.37	$1,671.27	$2,174.64
09-45-25-P3-00200.4902	CA LC1969 RIVIERS DRST	1768 PASEO GRANDE BLVD 4902FORT MYERS, FL 33912	MFA2	$6,060.00	$503.37	$1,671.27	$2,174.64
09-45-25-P3-00200.4903	O GRANDE BLVD # 4903F	1768 PASEO GRANDE BLVD 4903FORT MYERS, FL 33912	MFA2	$6,060.00	$503.37	$1,671.27	$2,174.64
09-45-25-P3-00200.4904	28 VIA LAGO WAYFORT M	1768 PASEO GRANDE BLVD 4904FORT MYERS, FL 33912	MFA2	$6,060.00	$503.37	$1,671.27	$2,174.64
09-45-25-P3-00200.4905	EO GRANDE BLVD #4905	1768 PASEO GRANDE BLVD 4905FORT MYERS, FL 33912	MFA2	$6,060.00	$503.37	$1,671.27	$2,174.64
09-45-25-P3-00200.5001	I LIVING TRUST11714 AD	11714 ADONCIA WAY 5001FORT MYERS, FL 33912	MFA2	$6,060.00	$503.37	$1,671.27	$2,174.64
09-45-25-P3-00200.5002	I7916 KINGS RIDGE CIRF	11714 ADONCIA WAY 5002FORT MYERS, FL 33912	MFA2	$6,060.00	$503.37	$1,671.27	$2,174.64
09-45-25-P3-00200.5003	PILAR 261 1846 ADROGU	11714 ADONCIA WAY 5003FORT MYERS, FL 33912	MFA2	$6,060.00	$503.37	$1,671.27	$2,174.64
09-45-25-P3-00200.5004	U43 ELEANOR DRKENDA	11714 ADONCIA WAY 5004FORT MYERS, FL 33912	MFA2	$6,060.00	$503.37	$1,671.27	$2,174.64
09-45-25-P3-00200.5005	COLONIAL FORGE RDST	11714 ADONCIA WAY 5005FORT MYERS, FL 33912	MFA2	$6,060.00	$503.37	$1,671.27	$2,174.64
09-45-25-P3-00200.5006	DONCIA WAY #5006FORT	11714 ADONCIA WAY 5006FORT MYERS, FL 33912	MFA2	$6,060.00	$503.37	$1,671.27	$2,174.64
09-45-25-P3-00200.5007	M966 SCOTTSDALE DRPI	11714 ADONCIA WAY 5007FORT MYERS, FL 33912	MFA2	$6,060.00	$503.37	$1,671.27	$2,174.64
09-45-25-P3-00200.5008	W HAWTHORNE RDMEQ	11714 ADONCIA WAY 5008FORT MYERS, FL 33912	MFA2	$6,060.00	$503.37	$1,671.27	$2,174.64
09-45-25-P3-00200.5009	RY1632 51ST ST S APT 32	11714 ADONCIA WAY 5009FORT MYERS, FL 33912	MFA2	$6,060.00	$503.37	$1,671.27	$2,174.64
09-45-25-P3-00200.5010	TICKS BLVD #202FORT M	11714 ADONCIA WAY 5010FORT MYERS, FL 33912	MFA2	$6,060.00	$503.37	$1,671.27	$2,174.64
09-45-25-P3-00200.5011	ONCIA WAY #5011FORT M	11714 ADONCIA WAY 5011FORT MYERS, FL 33912	MFA2	$6,060.00	$503.37	$1,671.27	$2,174.64
09-45-25-P3-00200.5012	D K3403 SNEAD PATHROU	11714 ADONCIA WAY 5012FORT MYERS, FL 33912	MFA2	$6,060.00	$503.37	$1,671.27	$2,174.64
09-45-25-P3-00200.5101	RLA RAE11940 PALBA WAY	11940 PALBA WAY 5101FORT MYERS, FL 33912	MFA2	$6,060.00	$503.37	$1,671.27	$2,174.64
09-45-25-P3-00200.5102	E JOANNE F11940 PALBA	11940 PALBA WAY 5102FORT MYERS, FL 33912	MFA2	$6,060.00	$503.37	$1,671.27	$2,174.64
09-45-25-P3-00200.5103	M11940 PALBA WAY # 510	11940 PALBA WAY 5103FORT MYERS, FL 33912	MFA2	$6,060.00	$503.37	$1,671.27	$2,174.64
09-45-25-P3-00200.5104	PALBA WAY #5104FORT M	11940 PALBA WAY 5104FORT MYERS, FL 33912	MFA2	$6,060.00	$503.37	$1,671.27	$2,174.64
09-45-25-P3-00200.5105	GELA107-38 87TH STOZO	11940 PALBA WAY 5105FORT MYERS, FL 33912	MFA2	$6,060.00	$503.37	$1,671.27	$2,174.64
09-45-25-P3-00200.5106	11940 PALBA WAY#5106F	11940 PALBA WAY 5106FORT MYERS, FL 33912	MFA2	$6,060.00	$503.37	$1,671.27	$2,174.64
09-45-25-P3-00200.5201	A J/T11220 PASEO GRAN	1220 PASEO GRANDE BLVD 5201FORT MYERS, FL 33912	MFA2	$6,060.00	$503.37	$1,671.27	$2,174.64
09-45-25-P3-00200.5202	RTA A1206 CHARTWELL C	1220 PASEO GRANDE BLVD 5202FORT MYERS, FL 33912	MFA2	$6,060.00	$503.37	$1,671.27	$2,174.64
09-45-25-P3-00200.5203	E642 GULF STOLEAN NY	1220 PASEO GRANDE BLVD 5203FORT MYERS, FL 33912	MFA2	$6,060.00	$503.37	$1,671.27	$2,174.64
09-45-25-P3-00200.5204	R CERIO LIVING TRUST7	1220 PASEO GRANDE BLVD 5204FORT MYERS, FL 33912	MFA2	$6,060.00	$503.37	$1,671.27	$2,174.64
09-45-25-P3-00200.5205	J/TPO BOX 128INTERNAT	1220 PASEO GRANDE BLVD 5205FORT MYERS, FL 33912	MFA2	$6,060.00	$503.37	$1,671.27	$2,174.64
09-45-25-P3-00200.5206	HYANIS CTMOUNT SINAI	1220 PASEO GRANDE BLVD 5206FORT MYERS, FL 33912	MFA2	$6,060.00	$503.37	$1,671.27	$2,174.64
09-45-25-P3-00200.5207	HOLDINGS TRUST1985 SN	1220 PASEO GRANDE BLVD 5207FORT MYERS, FL 33912	MFA2	$6,060.00	$503.37	$1,671.27	$2,174.64
09-45-25-P3-00200.5208	PASEO GRANDE BLVD #	1220 PASEO GRANDE BLVD 5208FORT MYERS, FL 33912	MFA1	$5,940.00	$503.37	$1,671.27	$2,174.64
09-45-25-P3-00200.5209	L ASHLEY7 WILLIAMS ST	1220 PASEO GRANDE BLVD 5209FORT MYERS, FL 33912	MFA1	$5,940.00	$503.37	$1,671.27	$2,174.64
09-45-25-P3-00200.5210	11220 PASEO GRANDE BL	1220 PASEO GRANDE BLVD 5210FORT MYERS, FL 33912	MFA1	$5,940.00	$503.37	$1,671.27	$2,174.64
09-45-25-P3-00200.5211	S D5547 S PALATINO AVE	1220 PASEO GRANDE BLVD 5211FORT MYERS, FL 33912	MFA2	$6,060.00	$503.37	$1,671.27	$2,174.64
09-45-25-P3-00200.5212	ASEO GRANDE BLVD#52	1220 PASEO GRANDE BLVD 5212FORT MYERS, FL 33912	MFA1	$5,940.00	$503.37	$1,671.27	$2,174.64
09-45-25-P3-00200.5301	OLLY S1523 N RIDGE RDP	1238 PASEO GRANDE BLVD 5301FORT MYERS, FL 33912	MFA2	$6,060.00	$503.37	$1,671.27	$2,174.64
09-45-25-P3-00200.5302	KAHUT TRUST350 MAIN	1238 PASEO GRANDE BLVD 5302FORT MYERS, FL 33912	MFA1	$5,940.00	$503.37	$1,671.27	$2,174.64
09-45-25-P3-00200.5303	CCI ANITA J/T8 BUCKALI	1238 PASEO GRANDE BLVD 5303FORT MYERS, FL 33912	MFA2	$6,060.00	$503.37	$1,671.27	$2,174.64
09-45-25-P3-00200.5304	LC112 RADFORD CTSTEP	1238 PASEO GRANDE BLVD 5304FORT MYERS, FL 33912	MFA2	$6,060.00	$503.37	$1,671.27	$2,174.64

PASEO COMMUNITY DEVELOPMENT DISTRICT
2019 ASSESSMENT LIEN ROLL

STRAP	Owner	Site Address	LU	SERIES 2018 REMAINING PRINCIPAL (1)	SERIES 2018 DEBT SERVICE	O&M	TOTAL
09-45-25-P3-00200.5305	KAREN M60 OAK PARK I	1238 PASEO GRANDE BLVD 5305FORT MYERS, FL 33912	MFA2	$6,060.00	$503.37	$1,671.27	$2,174.64
09-45-25-P3-00200.5401	894 PALBA WAY #5401FO	11894 PALBA WAY 5401FORT MYERS, FL 33912	MFA2	$6,060.00	$503.37	$1,671.27	$2,174.64
09-45-25-P3-00200.5402	PALBA WAY #5402FORT M	11894 PALBA WAY 5402FORT MYERS, FL 33912	MFA2	$6,060.00	$503.37	$1,671.27	$2,174.64
09-45-25-P3-00200.5403	GER TRUST11894 PALBA W	11894 PALBA WAY 5403FORT MYERS, FL 33912	MFA2	$6,060.00	$503.37	$1,671.27	$2,174.64
09-45-25-P3-00200.5404	COLE11894 PALBA WAY #5	11894 PALBA WAY 5404FORT MYERS, FL 33912	MFA2	$6,060.00	$503.37	$1,671.27	$2,174.64
09-45-25-P3-00200.5405	R LORI A11894 PALBA WA	11894 PALBA WAY 5405FORT MYERS, FL 33912	MFA2	$6,060.00	$503.37	$1,671.27	$2,174.64
09-45-25-P3-00200.5501	EITMEIER TRUST27300 CI	1256 PASEO GRANDE BLVD 5501FORT MYERS, FL 33912	MFA2	$6,060.00	$503.37	$1,671.27	$2,174.64
09-45-25-P3-00200.5502	LE M400 SENTINEL OAK I	1256 PASEO GRANDE BLVD 5502FORT MYERS, FL 33912	MFA1	$5,940.00	$503.37	$1,671.27	$2,174.64
09-45-25-P3-00200.5503	WERF TRUST11256 PASEO	1256 PASEO GRANDE BLVD 5503FORT MYERS, FL 33912	MFA2	$6,060.00	$503.37	$1,671.27	$2,174.64
09-45-25-P3-00200.5504	9 CHATSWORTH AVEOAK	1256 PASEO GRANDE BLVD 5504FORT MYERS, FL 33912	MFA1	$5,940.00	$503.37	$1,671.27	$2,174.64
09-45-25-P3-00200.5505	O GRANDE BLVD #5505F	1256 PASEO GRANDE BLVD 5505FORT MYERS, FL 33912	MFA2	$6,060.00	$503.37	$1,671.27	$2,174.64
09-45-25-P3-00200.5601	PALBA WAY # 5601FORT M	11872 PALBA WAY 5601FORT MYERS, FL 33912	MFA2	$6,060.00	$503.37	$1,671.27	$2,174.64
09-45-25-P3-00200.5602	EW J ET AL11872 PALBA W	11872 PALBA WAY 5602FORT MYERS, FL 33912	MFA2	$6,060.00	$503.37	$1,671.27	$2,174.64
09-45-25-P3-00200.5603	ATHERINE M1002 JOSHUA	11872 PALBA WAY 5603FORT MYERS, FL 33912	MFA2	$6,060.00	$503.37	$1,671.27	$2,174.64
09-45-25-P3-00200.5604	R PETER T STOPFER TRUS	11872 PALBA WAY 5604FORT MYERS, FL 33912	MFA2	$6,060.00	$503.37	$1,671.27	$2,174.64
09-45-25-P3-00200.5605	2 PALBA WAY#5605FORT	11872 PALBA WAY 5605FORT MYERS, FL 33912	MFA2	$6,060.00	$503.37	$1,671.27	$2,174.64
09-45-25-P3-00200.5701	72 PASEO GRANDE BLVD	1272 PASEO GRANDE BLVD 5701FORT MYERS, FL 33912	MFA2	$6,060.00	$503.37	$1,671.27	$2,174.64
09-45-25-P3-00200.5702	91 DOUBLE EAGLE DRBE	1272 PASEO GRANDE BLVD 5702FORT MYERS, FL 33912	MFA2	$6,060.00	$503.37	$1,671.27	$2,174.64
09-45-25-P3-00200.5703	ES LLC32W956 HONEY HI	1272 PASEO GRANDE BLVD 5703FORT MYERS, FL 33912	MFA2	$6,060.00	$503.37	$1,671.27	$2,174.64
09-45-25-P3-00200.5704	HERTIAGE VILLAGESOUT	1272 PASEO GRANDE BLVD 5704FORT MYERS, FL 33912	MFA2	$6,060.00	$503.37	$1,671.27	$2,174.64
09-45-25-P3-00200.5705	EN11272 PASEO GRANDE	1272 PASEO GRANDE BLVD 5705FORT MYERS, FL 33912	MFA2	$6,060.00	$503.37	$1,671.27	$2,174.64
09-45-25-P3-00200.5706	AMAN1107 PRINCE ST AP	1272 PASEO GRANDE BLVD 5706FORT MYERS, FL 33912	MFA2	$6,060.00	$503.37	$1,671.27	$2,174.64
09-45-25-P3-00200.5707	R DORENDA WENTWORT	1272 PASEO GRANDE BLVD 5707FORT MYERS, FL 33912	MFA2	$6,060.00	$503.37	$1,671.27	$2,174.64
09-45-25-P3-00200.5708	MRAJ9528 VIA LAGO WAY	1272 PASEO GRANDE BLVD 5708FORT MYERS, FL 33912	MFA2	$6,060.00	$503.37	$1,671.27	$2,174.64
09-45-25-P3-00200.5709	M414 LIGHT ST APT 801B	1272 PASEO GRANDE BLVD 5709FORT MYERS, FL 33912	MFA2	$6,060.00	$503.37	$1,671.27	$2,174.64
09-45-25-P3-00200.5710	ASEO GRANDE BLVD #571	1272 PASEO GRANDE BLVD 5710FORT MYERS, FL 33912	MFA2	$6,060.00	$503.37	$1,671.27	$2,174.64
09-45-25-P3-00200.5711	TH L26495 W RIVER RDPE	1272 PASEO GRANDE BLVD 5711FORT MYERS, FL 33912	MFA2	$6,060.00	$503.37	$1,671.27	$2,174.64
09-45-25-P3-00200.5712	WIMBLEDON WAYMARL	1272 PASEO GRANDE BLVD 5712FORT MYERS, FL 33912	MFA2	$6,060.00	$503.37	$1,671.27	$2,174.64
09-45-25-P3-00200.5801	11296 PASEO GRANDE B	1296 PASEO GRANDE BLVD 5801FORT MYERS, FL 33912	MFA2	$6,060.00	$503.37	$1,671.27	$2,174.64
09-45-25-P3-00200.5802	CABLE LIVING TRUSTST	1296 PASEO GRANDE BLVD 5802FORT MYERS, FL 33912	MFA2	$6,060.00	$503.37	$1,671.27	$2,174.64
09-45-25-P3-00200.5803	DAVID103 ARGYLE STR	1296 PASEO GRANDE BLVD 5803FORT MYERS, FL 33912	MFA2	$6,060.00	$503.37	$1,671.27	$2,174.64
09-45-25-P3-00200.5804	AUDREY LUCY20052 BL	1296 PASEO GRANDE BLVD 5804FORT MYERS, FL 33912	MFA2	$6,060.00	$503.37	$1,671.27	$2,174.64
09-45-25-P3-00200.5805	D H/W104 HOLDSWORTH	1296 PASEO GRANDE BLVD 5805FORT MYERS, FL 33912	MFA2	$6,060.00	$503.37	$1,671.27	$2,174.64
09-45-25-P3-00200.5806	BARBARA BLVD # 111C	1296 PASEO GRANDE BLVD 5806FORT MYERS, FL 33912	MFA2	$6,060.00	$503.37	$1,671.27	$2,174.64
09-45-25-P3-00200.5807	P11296 PASEO GRANDE B	1296 PASEO GRANDE BLVD 5807FORT MYERS, FL 33912	MFA2	$6,060.00	$503.37	$1,671.27	$2,174.64
09-45-25-P3-00200.5808	ASEO GRANDE BLVD #58	1296 PASEO GRANDE BLVD 5808FORT MYERS, FL 33912	MFA2	$6,060.00	$503.37	$1,671.27	$2,174.64
09-45-25-P3-00200.5809	E44677 OLD HIGHWAY 6O	1296 PASEO GRANDE BLVD 5809FORT MYERS, FL 33912	MFA2	$6,060.00	$503.37	$1,671.27	$2,174.64
09-45-25-P3-00200.5810	REVOCABLE TRUST21 M	1296 PASEO GRANDE BLVD 5810FORT MYERS, FL 33912	MFA2	$6,060.00	$503.37	$1,671.27	$2,174.64
09-45-25-P3-00200.5811	N TERRY R 1/2 T/C2135 CR	1296 PASEO GRANDE BLVD 5811FORT MYERS, FL 33912	MFA2	$6,060.00	$503.37	$1,671.27	$2,174.64
09-45-25-P3-00200.5812	AVINA TRUST17055 AUST	1296 PASEO GRANDE BLVD 5812FORT MYERS, FL 33912	MFA2	$6,060.00	$503.37	$1,671.27	$2,174.64
09-45-25-P3-00200.5901	O GRANDE BLVD #5901 F	1318 PASEO GRANDE BLVD 5901FORT MYERS, FL 33912	MFA2	$6,060.00	$503.37	$1,671.27	$2,174.64
09-45-25-P3-00200.5902	528 VIA LAGO WAYFORT	1318 PASEO GRANDE BLVD 5902FORT MYERS, FL 33912	MFA2	$6,060.00	$503.37	$1,671.27	$2,174.64
09-45-25-P3-00200.5903	NNE J2636 WAKELY RDC	1318 PASEO GRANDE BLVD 5903FORT MYERS, FL 33912	MFA2	$6,060.00	$503.37	$1,671.27	$2,174.64
09-45-25-P3-00200.5904	KINGSMILL WAYFORT MY	1318 PASEO GRANDE BLVD 5904FORT MYERS, FL 33912	MFA2	$6,060.00	$503.37	$1,671.27	$2,174.64
09-45-25-P3-00200.5905	AMI TRAIL N STE 300NAPI	1318 PASEO GRANDE BLVD 5905FORT MYERS, FL 33912	MFA2	$6,060.00	$503.37	$1,671.27	$2,174.64
09-45-25-P3-00200.6001	UST9 VIEWMOUNT CRES	11766 PALBA WAY 6001FORT MYERS, FL 33912	MFA2	$6,060.00	$503.37	$1,671.27	$2,174.64
09-45-25-P3-00200.6002	LC4 HERRICK DRIPSWICI	11766 PALBA WAY 6002FORT MYERS, FL 33912	MFA2	$6,060.00	$503.37	$1,671.27	$2,174.64
09-45-25-P3-00200.6003	RA11766 PALBA WAY #600	11766 PALBA WAY 6003FORT MYERS, FL 33912	MFA2	$6,060.00	$503.37	$1,671.27	$2,174.64
09-45-25-P3-00200.6004	RUST11766 PALBA WAY #6	11766 PALBA WAY 6004FORT MYERS, FL 33912	MFA2	$6,060.00	$503.37	$1,671.27	$2,174.64
09-45-25-P3-00200.6005	766 PALBA WAY #6005FOI	11766 PALBA WAY 6005FORT MYERS, FL 33912	MFA2	$6,060.00	$503.37	$1,671.27	$2,174.64
09-45-25-P3-00200.6101	ARRA WAY#6101FORT MY	11711 IZARRA WAY 6101FORT MYERS, FL 33912	MFA2	$6,060.00	$503.37	$1,671.27	$2,174.64
09-45-25-P3-00200.6102	E30 VINE STANDOVER M	11711 IZARRA WAY 6102FORT MYERS, FL 33912	MFA2	$6,060.00	$503.37	$1,671.27	$2,174.64
09-45-25-P3-00200.6103	E30 VINE STANDOVER M	11711 IZARRA WAY 6103FORT MYERS, FL 33912	MFA2	$6,060.00	$503.37	$1,671.27	$2,174.64
09-45-25-P3-00200.6104	VENTURE DRHAMILTON	11711 IZARRA WAY 6104FORT MYERS, FL 33912	MFA2	$6,060.00	$503.37	$1,671.27	$2,174.64
09-45-25-P3-00200.6105	MAUREENPO BOX 472N	11711 IZARRA WAY 6105FORT MYERS, FL 33912	MFA2	$6,060.00	$503.37	$1,671.27	$2,174.64
09-45-25-P3-00200.6106	711 IZARRA WAY #6106FO	11711 IZARRA WAY 6106FORT MYERS, FL 33912	MFA2	$6,060.00	$503.37	$1,671.27	$2,174.64
09-45-25-P3-00200.6107	I IZARRA WAY #6107FOR	11711 IZARRA WAY 6107FORT MYERS, FL 33912	MFA2	$6,060.00	$503.37	$1,671.27	$2,174.64

PASEO COMMUNITY DEVELOPMENT DISTRICT
2019 ASSESSMENT LIEN ROLL

STRAP	Owner	Site Address	LU	SERIES 2018 REMAINING PRINCIPAL (1)	SERIES 2018 DEBT SERVICE	O&M	TOTAL
09-45-25-P3-00200.6108	SARAH S16137 LEXINGT	11711 IZARRA WAY 6108FORT MYERS, FL 33912	MFA2	$6,060.00	$503.37	$1,671.27	$2,174.64
09-45-25-P3-00200.6109	11 CRYSTAL SPRINGS WA	11711 IZARRA WAY 6109FORT MYERS, FL 33912	MFA2	$6,060.00	$503.37	$1,671.27	$2,174.64
09-45-25-P3-00200.6110	A11711 IZARRA WAY #611	11711 IZARRA WAY 6110FORT MYERS, FL 33912	MFA2	$6,060.00	$503.37	$1,671.27	$2,174.64
09-45-25-P3-00200.6111	IZARRA WAY #6111FORT	11711 IZARRA WAY 6111FORT MYERS, FL 33912	MFA2	$6,060.00	$503.37	$1,671.27	$2,174.64
09-45-25-P3-00200.6112	N C3415 RAMSGATE ST N	11711 IZARRA WAY 6112FORT MYERS, FL 33912	MFA2	$6,060.00	$503.37	$1,671.27	$2,174.64
09-45-25-P3-00200.6201	SONIA36 RUE D'ESTORIL	11959 PALBA WAY 6201FORT MYERS, FL 33912	MFA1	$5,940.00	$503.37	$1,671.27	$2,174.64
09-45-25-P3-00200.6202	THONY 1 TEA OLIVE LN	11959 PALBA WAY 6202FORT MYERS, FL 33912	MFA1	$5,940.00	$503.37	$1,671.27	$2,174.64
09-45-25-P3-00200.6203	11959 PALBA WAY #6203F	11959 PALBA WAY 6203FORT MYERS, FL 33912	MFA1	$5,940.00	$503.37	$1,671.27	$2,174.64
09-45-25-P3-00200.6204	H + SHARON R PURNELL	11959 PALBA WAY 6204FORT MYERS, FL 33912	MFA1	$5,940.00	$503.37	$1,671.27	$2,174.64
09-45-25-P3-00200.6301	J/T408 ROUTE 22 UNIT 4N	11973 PALBA WAY 6301FORT MYERS, FL 33912	MFA1	$5,940.00	$503.37	$1,671.27	$2,174.64
09-45-25-P3-00200.6302	NIE A11973 PALBA WAY #	11973 PALBA WAY 6302FORT MYERS, FL 33912	MFA1	$5,940.00	$503.37	$1,671.27	$2,174.64
09-45-25-P3-00200.6303	ES LLC32W956 HONEY HI	11973 PALBA WAY 6303FORT MYERS, FL 33912	MFA1	$5,940.00	$503.37	$1,671.27	$2,174.64
09-45-25-P3-00200.6304	A ANITA11973 PALBA WAY	11973 PALBA WAY 6304FORT MYERS, FL 33912	MFA1	$5,940.00	$503.37	$1,671.27	$2,174.64
09-45-25-P3-00200.6305	1973 PALBA WAY # 6305F	11973 PALBA WAY 6305FORT MYERS, FL 33912	MFA1	$5,940.00	$503.37	$1,671.27	$2,174.64
09-45-25-P3-00200.6306	X 419BARRINGTON PASS	11973 PALBA WAY 6306FORT MYERS, FL 33912	MFA1	$5,940.00	$503.37	$1,671.27	$2,174.64
09-45-25-P3-00200.6401	11999 PALBA WAY#6401F	11999 PALBA WAY 6401FORT MYERS, FL 33912	MFA1	$5,940.00	$503.37	$1,671.27	$2,174.64
09-45-25-P3-00200.6402	999 PALBA WAY #6402FOR	11999 PALBA WAY 6402FORT MYERS, FL 33912	MFA1	$5,940.00	$503.37	$1,671.27	$2,174.64
09-45-25-P3-00200.6403	G TRUST11200 HEROLD H	11999 PALBA WAY 6403FORT MYERS, FL 33912	MFA1	$5,940.00	$503.37	$1,671.27	$2,174.64
09-45-25-P3-00200.6404	ARL E JR11999 PALBA WA	11999 PALBA WAY 6404FORT MYERS, FL 33912	MFA1	$5,940.00	$503.37	$1,671.27	$2,174.64
09-45-25-P3-00200.6405	ANN B1022 HANCOCK ST	11999 PALBA WAY 6405FORT MYERS, FL 33912	MFA1	$5,940.00	$503.37	$1,671.27	$2,174.64
09-45-25-P3-00200.6406	NTHIA27 WARWICK RDF	11999 PALBA WAY 6406FORT MYERS, FL 33912	MFA1	$5,940.00	$503.37	$1,671.27	$2,174.64
09-45-25-P3-00200.6501	SOUTH TRUST22 ELLIS ST	11937 PALBA WAY 6501FORT MYERS, FL 33912	MFA2	$6,060.00	$503.37	$1,671.27	$2,174.64
09-45-25-P3-00200.6502	0 SHADOWSTONE PLNAS	11937 PALBA WAY 6502FORT MYERS, FL 33912	MFA2	$6,060.00	$503.37	$1,671.27	$2,174.64
09-45-25-P3-00200.6503	DEBRA A4 HYACINTH LN	11937 PALBA WAY 6503FORT MYERS, FL 33912	MFA2	$6,060.00	$503.37	$1,671.27	$2,174.64
09-45-25-P3-00200.6504	CONSUELO J11937 PALB	11937 PALBA WAY 6504FORT MYERS, FL 33912	MFA1	$5,940.00	$503.37	$1,671.27	$2,174.64
09-45-25-P3-00200.6505	M11937 PALBA WAY #650	11937 PALBA WAY 6505FORT MYERS, FL 33912	MFA1	$5,940.00	$503.37	$1,671.27	$2,174.64
09-45-25-P3-00200.6506	AVIDES11937 PALBA WAY	11937 PALBA WAY 6506FORT MYERS, FL 33912	MFA2	$6,060.00	$503.37	$1,671.27	$2,174.64
09-45-25-P3-00200.6601	714 CREEKVIEW DRPLAI	11936 IZARRA WAY 6601FORT MYERS, FL 33912	MFA1	$5,940.00	$503.37	$1,671.27	$2,174.64
09-45-25-P3-00200.6602	ERITA J/T3 HEATHER RDT	11936 IZARRA WAY 6602FORT MYERS, FL 33912	MFA1	$5,940.00	$503.37	$1,671.27	$2,174.64
09-45-25-P3-00200.6603	TTE3782 SPERONE DRCA	11936 IZARRA WAY 6603FORT MYERS, FL 33912	MFA1	$5,940.00	$503.37	$1,671.27	$2,174.64
09-45-25-P3-00200.6604	HEREE A2199 VALLEY VI	11936 IZARRA WAY 6604FORT MYERS, FL 33912	MFA1	$5,940.00	$503.37	$1,671.27	$2,174.64
09-45-25-P3-00200.6605	11936 IZARRA WAY # 660	11936 IZARRA WAY 6605FORT MYERS, FL 33912	MFA1	$5,940.00	$503.37	$1,671.27	$2,174.64
09-45-25-P3-00200.6606	Y JO11936 IZARRA WAYU	11936 IZARRA WAY 6606FORT MYERS, FL 33912	MFA1	$5,940.00	$503.37	$1,671.27	$2,174.64
09-45-25-P3-00200.6607	NDEPENDENCE LNFREED	11936 IZARRA WAY 6607FORT MYERS, FL 33912	MFA2	$6,060.00	$503.37	$1,671.27	$2,174.64
09-45-25-P3-00200.6608	IZARRA WAY # 6608FORT	11936 IZARRA WAY 6608FORT MYERS, FL 33912	MFA1	$5,940.00	$503.37	$1,671.27	$2,174.64
09-45-25-P3-00200.6701	19 PALBA WAY # 6701FO	11919 PALBA WAY 6701FORT MYERS, FL 33912	MFA2	$6,060.00	$503.37	$1,671.27	$2,174.64
09-45-25-P3-00200.6702	11919 PALBA WAY #6702F	11919 PALBA WAY 6702FORT MYERS, FL 33912	MFA2	$6,060.00	$503.37	$1,671.27	$2,174.64
09-45-25-P3-00200.6703	LI ATENAIDA H/W11919 P	11919 PALBA WAY 6703FORT MYERS, FL 33912	MFA2	$6,060.00	$503.37	$1,671.27	$2,174.64
09-45-25-P3-00200.6704	SEPH JR & ALEXA3 REG	11919 PALBA WAY 6704FORT MYERS, FL 33912	MFA2	$6,060.00	$503.37	$1,671.27	$2,174.64
09-45-25-P3-00200.6705	19 PALBA WAY #6705FOR	11919 PALBA WAY 6705FORT MYERS, FL 33912	MFA2	$6,060.00	$503.37	$1,671.27	$2,174.64
09-45-25-P3-00200.6706	568 VICTORY HWYNORT	11919 PALBA WAY 6706FORT MYERS, FL 33912	MFA2	$6,060.00	$503.37	$1,671.27	$2,174.64
09-45-25-P3-00200.6801	L11920 IZARRA WAY #680	11920 IZARRA WAY 6801FORT MYERS, FL 33912	MFA2	$6,060.00	$503.37	$1,671.27	$2,174.64
09-45-25-P3-00200.6802	612 RIVERSTONE LNFORT	11920 IZARRA WAY 6802FORT MYERS, FL 33912	MFA2	$6,060.00	$503.37	$1,671.27	$2,174.64
09-45-25-P3-00200.6803	088 CHARDONNAY TRA	11920 IZARRA WAY 6803FORT MYERS, FL 33912	MFA2	$6,060.00	$503.37	$1,671.27	$2,174.64
09-45-25-P3-00200.6804	DIRIS C H/W J/T11920 IZA	11920 IZARRA WAY 6804FORT MYERS, FL 33912	MFA2	$6,060.00	$503.37	$1,671.27	$2,174.64
09-45-25-P3-00200.6805	1920 IZARRA WAY # 6805	11920 IZARRA WAY 6805FORT MYERS, FL 33912	MFA2	$6,060.00	$503.37	$1,671.27	$2,174.64
09-45-25-P3-00200.6806	FAMILY HOLDING TRUST	11920 IZARRA WAY 6806FORT MYERS, FL 33912	MFA2	$6,060.00	$503.37	$1,671.27	$2,174.64
09-45-25-P3-00200.6901	M NEILSON TRUST11907	11907 PALBA WAY 6901FORT MYERS, FL 33912	MFA2	$6,060.00	$503.37	$1,671.27	$2,174.64
09-45-25-P3-00200.6902	L11907 PALBA WAY #690	11907 PALBA WAY 6902FORT MYERS, FL 33912	MFA2	$6,060.00	$503.37	$1,671.27	$2,174.64
09-45-25-P3-00200.6903	PO BOX 398NEW DUNDE	11907 PALBA WAY 6903FORT MYERS, FL 33912	MFA2	$6,060.00	$503.37	$1,671.27	$2,174.64
09-45-25-P3-00200.6904	N OAKLEY LNWESTMO	11907 PALBA WAY 6904FORT MYERS, FL 33912	MFA2	$6,060.00	$503.37	$1,671.27	$2,174.64
09-45-25-P3-00200.6905	7 PALBA WAY # 6905FOR	11907 PALBA WAY 6905FORT MYERS, FL 33912	MFA2	$6,060.00	$503.37	$1,671.27	$2,174.64
09-45-25-P3-00200.6906	7 PALBA WAY # 6906FORT	11907 PALBA WAY 6906FORT MYERS, FL 33912	MFA2	$6,060.00	$503.37	$1,671.27	$2,174.64
09-45-25-P3-00200.7001	D4849 206TH STBAYSIDE	11908 IZARRA WAY 7001FORT MYERS, FL 33912	MFA2	$6,060.00	$503.37	$1,671.27	$2,174.64
09-45-25-P3-00200.7002	EL14750 MAHOE CTFORT	11908 IZARRA WAY 7002FORT MYERS, FL 33912	MFA2	$6,060.00	$503.37	$1,671.27	$2,174.64
09-45-25-P3-00200.7003	V ALKALINE SPRINGS RD	11908 IZARRA WAY 7003FORT MYERS, FL 33912	MFA2	$6,060.00	$503.37	$1,671.27	$2,174.64
09-45-25-P3-00200.7004	11908 IZARRA WAY # 7004	11908 IZARRA WAY 7004FORT MYERS, FL 33912	MFA2	$6,060.00	$503.37	$1,671.27	$2,174.64

PASEO COMMUNITY DEVELOPMENT DISTRICT
2019 ASSESSMENT LIEN ROLL

STRAP	Owner	Site Address	LU	SERIES 2018 REMAINING PRINCIPAL (1)	SERIES 2018 DEBT SERVICE	O&M	TOTAL
09-45-25-P3-00200.7005	SEO DE VALENCIA STFOI	11908 IZARRA WAY 7005FORT MYERS, FL 33912	MFA2	$6,060.00	$503.37	$1,671.27	$2,174.64
09-45-25-P3-00200.7006	0 7TH ST APT 901PITTSBU	11908 IZARRA WAY 7006FORT MYERS, FL 33912	MFA2	$6,060.00	$503.37	$1,671.27	$2,174.64
09-45-25-P3-00200.7101	ZANNE11863 PALBA WAY	11863 PALBA WAY 7101FORT MYERS, FL 33912	MFA2	$6,060.00	$503.37	$1,671.27	$2,174.64
09-45-25-P3-00200.7102	0412 MATTERHORN DR #	11863 PALBA WAY 7102FORT MYERS, FL 33912	MFA2	$6,060.00	$503.37	$1,671.27	$2,174.64
09-45-25-P3-00200.7103	63 PALBA WAY #7103FOR	11863 PALBA WAY 7103FORT MYERS, FL 33912	MFA2	$6,060.00	$503.37	$1,671.27	$2,174.64
09-45-25-P3-00200.7104	Y E28 STONEHEDGE WA	11863 PALBA WAY 7104FORT MYERS, FL 33912	MFA2	$6,060.00	$503.37	$1,671.27	$2,174.64
09-45-25-P3-00200.7105	3 PALBA WAY APT 7105F	11863 PALBA WAY 7105FORT MYERS, FL 33912	MFA2	$6,060.00	$503.37	$1,671.27	$2,174.64
09-45-25-P3-00200.7106	LE INTERVIVOS TRUST11	11863 PALBA WAY 7106FORT MYERS, FL 33912	MFA2	$6,060.00	$503.37	$1,671.27	$2,174.64
09-45-25-P3-00200.7201	Y11864 IZARRA WAY #720	11864 IZARRA WAY 7201FORT MYERS, FL 33912	MFA2	$6,060.00	$503.37	$1,671.27	$2,174.64
09-45-25-P3-00200.7202	L2232 CLEVELAN DAVES	11864 IZARRA WAY 7202FORT MYERS, FL 33912	MFA2	$6,060.00	$503.37	$1,671.27	$2,174.64
09-45-25-P3-00200.7203	L11864 IZARRA WAY # 72	11864 IZARRA WAY 7203FORT MYERS, FL 33912	MFA2	$6,060.00	$503.37	$1,671.27	$2,174.64
09-45-25-P3-00200.7204	I ANN J/T11864 IZARRA W	11864 IZARRA WAY 7204FORT MYERS, FL 33912	MFA2	$0.00	$0.00	$1,671.27	$1,671.27
09-45-25-P3-00200.7205	E A2575 CHURCHILL DRS/	11864 IZARRA WAY 7205FORT MYERS, FL 33912	MFA2	$6,060.00	$503.37	$1,671.27	$2,174.64
09-45-25-P3-00200.7206	A E841 HIGH MOUNTAIN I	11864 IZARRA WAY 7206FORT MYERS, FL 33912	MFA2	$6,060.00	$503.37	$1,671.27	$2,174.64
09-45-25-P3-00200.7301	N + NADERMANN TERRY	11845 PALBA WAY 7301FORT MYERS, FL 33912	MFA2	$6,060.00	$503.37	$1,671.27	$2,174.64
09-45-25-P3-00200.7302	PALBA WAY # 7302FORT I	11845 PALBA WAY 7302FORT MYERS, FL 33912	MFA2	$6,060.00	$503.37	$1,671.27	$2,174.64
09-45-25-P3-00200.7303	E519 BARRETT AVEATLA	11845 PALBA WAY 7303FORT MYERS, FL 33912	MFA2	$6,060.00	$503.37	$1,671.27	$2,174.64
09-45-25-P3-00200.7304	+ KAREN22 MYRTLE AVI	11845 PALBA WAY 7304FORT MYERS, FL 33912	MFA2	$6,060.00	$503.37	$1,671.27	$2,174.64
09-45-25-P3-00200.7305	ARLENE J/T808 SANDY RI	11845 PALBA WAY 7305FORT MYERS, FL 33912	MFA2	$6,060.00	$503.37	$1,671.27	$2,174.64
09-45-25-P3-00200.7306	PALBA WAY #7306 FORT M	11845 PALBA WAY 7306FORT MYERS, FL 33912	MFA2	$6,060.00	$503.37	$1,671.27	$2,174.64
09-45-25-P3-00200.7401	Y K11846 IZARRA WAY # 7	11846 IZARRA WAY 7401FORT MYERS, FL 33912	MFA2	$6,060.00	$503.37	$1,671.27	$2,174.64
09-45-25-P3-00200.7402	6 IZARRA WAY #7402FOR	11846 IZARRA WAY 7402FORT MYERS, FL 33912	MFA2	$6,060.00	$503.37	$1,671.27	$2,174.64
09-45-25-P3-00200.7403	3912 CHICAGO BLOOMI	11846 IZARRA WAY 7403FORT MYERS, FL 33912	MFA2	$6,060.00	$503.37	$1,671.27	$2,174.64
09-45-25-P3-00200.7404	846 IZARRA WAY #7404FC	11846 IZARRA WAY 7404FORT MYERS, FL 33912	MFA2	$6,060.00	$503.37	$1,671.27	$2,174.64
09-45-25-P3-00200.7405	CHELLE L11846 IZARRA V	11846 IZARRA WAY 7405FORT MYERS, FL 33912	MFA2	$6,060.00	$503.37	$1,671.27	$2,174.64
09-45-25-P3-00200.7406	20 RUGBY RDEAST MEAI	11846 IZARRA WAY 7406FORT MYERS, FL 33912	MFA2	$6,060.00	$503.37	$1,671.27	$2,174.64
09-45-25-P3-00200.7501	TS LLC972 WYNDHAM D	8663 OLINDA WAY 7501FORT MYERS, FL 33912	MFA2	$6,060.00	$503.37	$1,671.27	$2,174.64
09-45-25-P3-00200.7502	LLIAN141 TITLEIST TRLP	8663 OLINDA WAY 7502FORT MYERS, FL 33912	MFA2	$6,060.00	$503.37	$1,671.27	$2,174.64
09-45-25-P3-00200.7503	39 PROFESSIONAL CIR ST	8663 OLINDA WAY 7503FORT MYERS, FL 33912	MFA2	$6,060.00	$503.37	$1,671.27	$2,174.64
09-45-25-P3-00200.7504	RISTINE8663 OLINDA WAY	8663 OLINDA WAY 7504FORT MYERS, FL 33912	MFA2	$6,060.00	$503.37	$1,671.27	$2,174.64
09-45-25-P3-00200.7505	QUEEN ST EASTTORON	8663 OLINDA WAY 7505FORT MYERS, FL 33912	MFA2	$6,060.00	$503.37	$1,671.27	$2,174.64
09-45-25-P3-00200.7506	EEN S11948 TULIO WAY 2	8663 OLINDA WAY 7506FORT MYERS, FL 33912	MFA2	$6,060.00	$503.37	$1,671.27	$2,174.64
09-45-25-P3-00200.7507	ANN M183 BUCKINGHAM	8663 OLINDA WAY 7507FORT MYERS, FL 33912	MFA2	$6,060.00	$503.37	$1,671.27	$2,174.64
09-45-25-P3-00200.7508	EL A8663 OLINDA WAY #7	8663 OLINDA WAY 7508FORT MYERS, FL 33912	MFA2	$6,060.00	$503.37	$1,671.27	$2,174.64
09-45-25-P3-00200.7509	LINDA WAY #7509FORT M	8663 OLINDA WAY 7509FORT MYERS, FL 33912	MFA2	$6,060.00	$503.37	$1,671.27	$2,174.64
09-45-25-P3-00200.7510	S H/W16604 CHESTNUT C	8663 OLINDA WAY 7510FORT MYERS, FL 33912	MFA2	$6,060.00	$503.37	$1,671.27	$2,174.64
09-45-25-P3-00200.7601	LC321 N 28TH STCAMP HI	8697 OLINDA WAY 7601FORT MYERS, FL 33912	MFA2	$6,060.00	$503.37	$1,671.27	$2,174.64
09-45-25-P3-00200.7602	LINDA WAY#7602FORT M	8697 OLINDA WAY 7602FORT MYERS, FL 33912	MFA2	$6,060.00	$503.37	$1,671.27	$2,174.64
09-45-25-P3-00200.7603	ARY W/H19 OAK HAMPTO	8697 OLINDA WAY 7603FORT MYERS, FL 33912	MFA2	$6,060.00	$503.37	$1,671.27	$2,174.64
09-45-25-P3-00200.7604	THERTON DRFARMINGT	8697 OLINDA WAY 7604FORT MYERS, FL 33912	MFA2	$6,060.00	$503.37	$1,671.27	$2,174.64
09-45-25-P3-00200.7605	OYKIN SPANIEL RDCHAR	8697 OLINDA WAY 7605FORT MYERS, FL 33912	MFA2	$6,060.00	$503.37	$1,671.27	$2,174.64
09-45-25-P3-00200.7606	E TRUST1491 VIRGINIA A	8697 OLINDA WAY 7606FORT MYERS, FL 33912	MFA2	$6,060.00	$503.37	$1,671.27	$2,174.64
09-45-25-P3-00200.7607	AH107 MIDDLE RIVER RD	8697 OLINDA WAY 7607FORT MYERS, FL 33912	MFA2	$6,060.00	$503.37	$1,671.27	$2,174.64
09-45-25-P3-00200.7608	N TERRY R 1/2 T/C2135 CR	8697 OLINDA WAY 7608FORT MYERS, FL 33912	MFA2	$6,060.00	$503.37	$1,671.27	$2,174.64
09-45-25-P3-00200.7609	M KUNSMAN H/W406 W	8697 OLINDA WAY 7609FORT MYERS, FL 33912	MFA2	$6,060.00	$503.37	$1,671.27	$2,174.64
09-45-25-P3-00200.7610	JORDYN L J/T8697 OLIND	8697 OLINDA WAY 7610FORT MYERS, FL 33912	MFA2	$6,060.00	$503.37	$1,671.27	$2,174.64
09-45-25-P3-00200.7701	ROL T/C65-24 162ST APT #	11758 IZARRA WAY 7701FORT MYERS, FL 33912	MFA2	$6,060.00	$503.37	$1,671.27	$2,174.64
09-45-25-P3-00200.7702	LL TRUST23763 S SADDL	11758 IZARRA WAY 7702FORT MYERS, FL 33912	MFA2	$6,060.00	$503.37	$1,671.27	$2,174.64
09-45-25-P3-00200.7703	LISSA905 ASTER CTFAIRF	11758 IZARRA WAY 7703FORT MYERS, FL 33912	MFA2	$6,060.00	$503.37	$1,671.27	$2,174.64
09-45-25-P3-00200.7704	T224 RUE DE BAYEUXBO	11758 IZARRA WAY 7704FORT MYERS, FL 33912	MFA2	$6,060.00	$503.37	$1,671.27	$2,174.64
09-45-25-P3-00200.7705	CIA R11327 HARRISON ST	11758 IZARRA WAY 7705FORT MYERS, FL 33912	MFA2	$6,060.00	$503.37	$1,671.27	$2,174.64
09-45-25-P3-00200.7706	JOHN FRANK JR ET AL8	11758 IZARRA WAY 7706FORT MYERS, FL 33912	MFA2	$6,060.00	$503.37	$1,671.27	$2,174.64
09-45-25-P3-00200.7707	A365 LEGEND VIEW WAI	11758 IZARRA WAY 7707FORT MYERS, FL 33912	MFA2	$6,060.00	$503.37	$1,671.27	$2,174.64
09-45-25-P3-00200.7708	EN ANN H/W47 KIRK DRI	11758 IZARRA WAY 7708FORT MYERS, FL 33912	MFA2	$6,060.00	$503.37	$1,671.27	$2,174.64
09-45-25-P3-00200.7709	O LORRAINE A106 GEORG	11758 IZARRA WAY 7709FORT MYERS, FL 33912	MFA2	$6,060.00	$503.37	$1,671.27	$2,174.64
09-45-25-P3-00200.7710	L11758 IZARRA WAY #771	11758 IZARRA WAY 7710FORT MYERS, FL 33912	MFA2	$6,060.00	$503.37	$1,671.27	$2,174.64
09-45-25-P3-00200.7801	OL M8127 LARK STFOGEI	11736 IZARRA WAY 7801FORT MYERS, FL 33912	MFA2	$6,060.00	$503.37	$1,671.27	$2,174.64

PASEO COMMUNITY DEVELOPMENT DISTRICT
2019 ASSESSMENT LIEN ROLL

STRAP	Owner	Site Address	LU	SERIES 2018 REMAINING PRINCIPAL (1)	SERIES 2018 DEBT SERVICE	O&M	TOTAL
09-45-25-P3-00200.7802	ZARRA WAY #7802FORT M	11736 IZARRA WAY 7802FORT MYERS, FL 33912	MFA2	$6,060.00	$503.37	$1,671.27	$2,174.64
09-45-25-P3-00200.7803	135 SECLUDED PINES DR	11736 IZARRA WAY 7803FORT MYERS, FL 33912	MFA2	$6,060.00	$503.37	$1,671.27	$2,174.64
09-45-25-P3-00200.7804	7 GREEN FOREST CTEAST	11736 IZARRA WAY 7804FORT MYERS, FL 33912	MFA2	$6,060.00	$503.37	$1,671.27	$2,174.64
09-45-25-P3-00200.7805	ARRA WAY # 7805FORT M	11736 IZARRA WAY 7805FORT MYERS, FL 33912	MFA2	$6,060.00	$503.37	$1,671.27	$2,174.64
09-45-25-P3-00200.7806	LAKE REV TRUST205 S B	11736 IZARRA WAY 7806FORT MYERS, FL 33912	MFA2	$6,060.00	$503.37	$1,671.27	$2,174.64
09-45-25-P3-00200.7807	I L11736 IZARRA WAY #78	11736 IZARRA WAY 7807FORT MYERS, FL 33912	MFA2	$6,060.00	$503.37	$1,671.27	$2,174.64
09-45-25-P3-00200.7808	8 NUTMEG LANE STAMFO	11736 IZARRA WAY 7808FORT MYERS, FL 33912	MFA2	$6,060.00	$503.37	$1,671.27	$2,174.64
09-45-25-P3-00200.7809	DIA Z3830 N VERNON STA	11736 IZARRA WAY 7809FORT MYERS, FL 33912	MFA2	$6,060.00	$503.37	$1,671.27	$2,174.64
09-45-25-P3-00200.7810	N J/T11736 IZARRA WAY #	11736 IZARRA WAY 7810FORT MYERS, FL 33912	MFA2	$6,060.00	$503.37	$1,671.27	$2,174.64
09-45-25-P3-00200.7901	7 IZARRA WAY#7901FORT	11977 IZARRA WAY 7901FORT MYERS, FL 33912	MFA2	$6,060.00	$503.37	$1,671.27	$2,174.64
09-45-25-P3-00200.7902	PAULINE11977 IZARRA WA	11977 IZARRA WAY 7902FORT MYERS, FL 33912	MFA2	$6,060.00	$503.37	$1,671.27	$2,174.64
09-45-25-P3-00200.7903	TRUST11977 IZARRA WAY	11977 IZARRA WAY 7903FORT MYERS, FL 33912	MFA2	$6,060.00	$503.37	$1,671.27	$2,174.64
09-45-25-P3-00200.7904	7 IZARRA WAY #7904FORT	11977 IZARRA WAY 7904FORT MYERS, FL 33912	MFA2	$6,060.00	$503.37	$1,671.27	$2,174.64
09-45-25-P3-00200.8001	QUEL T/C8760 MELOSIA S	8760 MELOSIA ST 8001FORT MYERS, FL 33912	MFA2	$6,060.00	$503.37	$1,671.27	$2,174.64
09-45-25-P3-00200.8002	NE A J/T11140 ESTEBAN I	8760 MELOSIA ST 8002FORT MYERS, FL 33912	MFA2	$6,060.00	$503.37	$1,671.27	$2,174.64
09-45-25-P3-00200.8003	CY L8 EASTBROOK RDPA	8760 MELOSIA ST 8003FORT MYERS, FL 33912	MFA2	$6,060.00	$503.37	$1,671.27	$2,174.64
09-45-25-P3-00200.8004	MS LIVING TRUST761 LAI	8760 MELOSIA ST 8004FORT MYERS, FL 33912	MFA2	$6,060.00	$503.37	$1,671.27	$2,174.64
09-45-25-P3-00200.8005	STHER H/W8760 MELOSIA	8760 MELOSIA ST 8005FORT MYERS, FL 33912	MFA2	$6,060.00	$503.37	$1,671.27	$2,174.64
09-45-25-P3-00200.8006	RL V1805 MUIRFIELD CTI	8760 MELOSIA ST 8006FORT MYERS, FL 33912	MFA2	$6,060.00	$503.37	$1,671.27	$2,174.64
09-45-25-P3-00200.8101	CKINGHAM DRSOUTHAM	11993 NALDA ST 8101FORT MYERS, FL 33912	MFA2	$6,060.00	$503.37	$1,671.27	$2,174.64
09-45-25-P3-00200.8102	B186 COLVILLA DRWEST	11993 NALDA ST 8102FORT MYERS, FL 33912	MFA2	$6,060.00	$503.37	$1,671.27	$2,174.64
09-45-25-P3-00200.8103	M11993 NALDA ST #8103	11993 NALDA ST 8103FORT MYERS, FL 33912	MFA2	$6,060.00	$503.37	$1,671.27	$2,174.64
09-45-25-P3-00200.8104	L11993 NALDA ST #8104F	11993 NALDA ST 8104FORT MYERS, FL 33912	MFA2	$6,060.00	$503.37	$1,671.27	$2,174.64
09-45-25-P3-00200.8201	DIANE28 BLOSSOM LNM	8753 MELOSIA ST 8201FORT MYERS, FL 33912	MFA2	$6,060.00	$503.37	$1,671.27	$2,174.64
09-45-25-P3-00200.8202	DINA H/W857 LEGACY G	8753 MELOSIA ST 8202FORT MYERS, FL 33912	MFA2	$6,060.00	$503.37	$1,671.27	$2,174.64
09-45-25-P3-00200.8203	MELOSIA ST #8203FORT M	8753 MELOSIA ST 8203FORT MYERS, FL 33912	MFA2	$6,060.00	$503.37	$1,671.27	$2,174.64
09-45-25-P3-00200.8204	E8753 MELOSIA ST # 8204	8753 MELOSIA ST 8204FORT MYERS, FL 33912	MFA2	$6,060.00	$503.37	$1,671.27	$2,174.64
09-45-25-P3-00200.8205	DIA RIVERA8753 MELOSI	8753 MELOSIA ST 8205FORT MYERS, FL 33912	MFA2	$6,060.00	$503.37	$1,671.27	$2,174.64
09-45-25-P3-00200.8206	JOY E1105 LORRAINE CT	8753 MELOSIA ST 8206FORT MYERS, FL 33912	MFA2	$6,060.00	$503.37	$1,671.27	$2,174.64
09-45-25-P3-00200.8207	E C21 BONNAILLE AVELI	8753 MELOSIA ST 8207FORT MYERS, FL 33912	MFA2	$6,060.00	$503.37	$1,671.27	$2,174.64
09-45-25-P3-00200.8208	Y J/T3482 DRIFTWOOD DI	8753 MELOSIA ST 8208FORT MYERS, FL 33912	MFA2	$6,060.00	$503.37	$1,671.27	$2,174.64
09-45-25-P3-00200.8209	PACE THOMAS FAMILY TI	8753 MELOSIA ST 8209FORT MYERS, FL 33912	MFA2	$6,060.00	$503.37	$1,671.27	$2,174.64
09-45-25-P3-00200.8210	3 MELOSIA ST #8210FORT	8753 MELOSIA ST 8210FORT MYERS, FL 33912	MFA2	$6,060.00	$503.37	$1,671.27	$2,174.64
09-45-25-P3-00200.8301	GLIONE THERESA E6 KIPI	8791 MELOSIA ST 8301FORT MYERS, FL 33912	MFA2	$6,060.00	$503.37	$1,671.27	$2,174.64
09-45-25-P3-00200.8302	MANDI A H/W21 LAKE SI	8791 MELOSIA ST 8302FORT MYERS, FL 33912	MFA2	$6,060.00	$503.37	$1,671.27	$2,174.64
09-45-25-P3-00200.8303	00 NEW JERSEY AVE #302	8791 MELOSIA ST 8303FORT MYERS, FL 33912	MFA2	$6,060.00	$503.37	$1,671.27	$2,174.64
09-45-25-P3-00200.8304	04 LLC321 N 28TH STCAM	8791 MELOSIA ST 8304FORT MYERS, FL 33912	MFA2	$6,060.00	$503.37	$1,671.27	$2,174.64
09-45-25-P3-00200.8305	NISPO BOX 43679DETRO	8791 MELOSIA ST 8305FORT MYERS, FL 33912	MFA2	$6,060.00	$503.37	$1,671.27	$2,174.64
09-45-25-P3-00200.8306	EN ANN J/T47 KIRK AVEI	8791 MELOSIA ST 8306FORT MYERS, FL 33912	MFA2	$6,060.00	$503.37	$1,671.27	$2,174.64
09-45-25-P3-00200.8307	MELOSIA ST # 8307FORT	8791 MELOSIA ST 8307FORT MYERS, FL 33912	MFA2	$6,060.00	$503.37	$1,671.27	$2,174.64
09-45-25-P3-00200.8308	ST2293 FOXFIELD RDOAK	8791 MELOSIA ST 8308FORT MYERS, FL 33912	MFA2	$6,060.00	$503.37	$1,671.27	$2,174.64
09-45-25-P3-00200.8309	M29 N WAWECUS HILL R	8791 MELOSIA ST 8309FORT MYERS, FL 33912	MFA2	$6,060.00	$503.37	$1,671.27	$2,174.64
09-45-25-P3-00200.8310	+ ROBIN17 WENDY DRLI	8791 MELOSIA ST 8310FORT MYERS, FL 33912	MFA2	$6,060.00	$503.37	$1,671.27	$2,174.64
09-45-25-P3-00200.8401	SPONSELLER TRUST3325	8788 JAVIERA WAY 8401FORT MYERS, FL 33912	MFA2	$6,060.00	$503.37	$1,671.27	$2,174.64
09-45-25-P3-00200.8402	ARY8788 JAVIERA WAY #	8788 JAVIERA WAY 8402FORT MYERS, FL 33912	MFA2	$6,060.00	$503.37	$1,671.27	$2,174.64
09-45-25-P3-00200.8403	A HUTTON TRUST8788 JA	8788 JAVIERA WAY 8403FORT MYERS, FL 33912	MFA2	$6,060.00	$503.37	$1,671.27	$2,174.64
09-45-25-P3-00200.8404	ETH JOANNE J/T18 1270	8788 JAVIERA WAY 8404FORT MYERS, FL 33912	MFA2	$6,060.00	$503.37	$1,671.27	$2,174.64
09-45-25-P3-00200.8405	8788 JAVIERA WAY # 8405	8788 JAVIERA WAY 8405FORT MYERS, FL 33912	MFA2	$6,060.00	$503.37	$1,671.27	$2,174.64
09-45-25-P3-00200.8406	HBURNHAM DRPETERBO	8788 JAVIERA WAY 8406FORT MYERS, FL 33912	MFA2	$6,060.00	$503.37	$1,671.27	$2,174.64
09-45-25-P3-00200.8407	ARSON TRUST 10232 E W	8788 JAVIERA WAY 8407FORT MYERS, FL 33912	MFA2	$6,060.00	$503.37	$1,671.27	$2,174.64
09-45-25-P3-00200.8408	A8788 JAVIERA WAY #8408	8788 JAVIERA WAY 8408FORT MYERS, FL 33912	MFA2	$6,060.00	$503.37	$1,671.27	$2,174.64
09-45-25-P3-00200.8409	M KELLY TRUST4530 DAV	8788 JAVIERA WAY 8409FORT MYERS, FL 33912	MFA2	$6,060.00	$503.37	$1,671.27	$2,174.64
09-45-25-P3-00200.8410	RIA8788 JAVIERA WAY#84	8788 JAVIERA WAY 8410FORT MYERS, FL 33912	MFA2	$6,060.00	$503.37	$1,671.27	$2,174.64
09-45-25-P3-00200.8501	CE A BENNER IRA2001 SI	8752 JAVIERA WAY 8501FORT MYERS, FL 33912	MFA2	$6,060.00	$503.37	$1,671.27	$2,174.64
09-45-25-P3-00200.8502	E L270 BUTLER BLVDBAY	8752 JAVIERA WAY 8502FORT MYERS, FL 33912	MFA2	$6,060.00	$503.37	$1,671.27	$2,174.64
09-45-25-P3-00200.8503	+ JUDITH CPO BOX 3055	8752 JAVIERA WAY 8503FORT MYERS, FL 33912	MFA2	$6,060.00	$503.37	$1,671.27	$2,174.64
09-45-25-P3-00200.8504	0433 MCKIM STSUDBURY	8752 JAVIERA WAY 8504FORT MYERS, FL 33912	MFA2	$6,060.00	$503.37	$1,671.27	$2,174.64

PASEO COMMUNITY DEVELOPMENT DISTRICT
2019 ASSESSMENT LIEN ROLL

STRAP	Owner	Site Address	LU	SERIES 2018 REMAINING PRINCIPAL (1)	SERIES 2018 DEBT SERVICE	O&M	TOTAL
09-45-25-P3-00200.8505	AGLEVIEW CRESCOURTE	8752 JAVIERA WAY 8505FORT MYERS, FL 33912	MFA2	$6,060.00	$503.37	$1,671.27	$2,174.64
09-45-25-P3-00200.8506	L J/T11 ATWOOD CRESSIM	8752 JAVIERA WAY 8506FORT MYERS, FL 33912	MFA2	$6,060.00	$503.37	$1,671.27	$2,174.64
09-45-25-P3-00200.8507	JAVIERA WAY #8507FORT	8752 JAVIERA WAY 8507FORT MYERS, FL 33912	MFA2	$6,060.00	$503.37	$1,671.27	$2,174.64
09-45-25-P3-00200.8508	R8752 JAVIERA WAY # 85	8752 JAVIERA WAY 8508FORT MYERS, FL 33912	MFA2	$6,060.00	$503.37	$1,671.27	$2,174.64
09-45-25-P3-00200.8509	NO MARIANNA67 POWER	8752 JAVIERA WAY 8509FORT MYERS, FL 33912	MFA2	$6,060.00	$503.37	$1,671.27	$2,174.64
09-45-25-P3-00200.8510	REN L5 PLATT DRWALLIN	8752 JAVIERA WAY 8510FORT MYERS, FL 33912	MFA2	$6,060.00	$503.37	$1,671.27	$2,174.64
09-45-25-P3-00200.8601	ZARRA WAY APT 8601FO	11901 IZARRA WAY 8601FORT MYERS, FL 33912	MFA2	$6,060.00	$503.37	$1,671.27	$2,174.64
09-45-25-P3-00200.8602	CY120 MALTBY RDGUELI	11901 IZARRA WAY 8602FORT MYERS, FL 33912	MFA2	$6,060.00	$503.37	$1,671.27	$2,174.64
09-45-25-P3-00200.8603	DLAS11901 IZARRA WAY #	11901 IZARRA WAY 8603FORT MYERS, FL 33912	MFA2	$6,060.00	$503.37	$1,671.27	$2,174.64
09-45-25-P3-00200.8604	RWOOD AVETORONTO O	11901 IZARRA WAY 8604FORT MYERS, FL 33912	MFA2	$6,060.00	$503.37	$1,671.27	$2,174.64
09-45-25-P3-00200.8605	ARD11901 IZARRA WAY #	11901 IZARRA WAY 8605FORT MYERS, FL 33912	MFA2	$6,060.00	$503.37	$1,671.27	$2,174.64
09-45-25-P3-00200.8606	72 SEAFORD AVEWANTAG	11901 IZARRA WAY 8606FORT MYERS, FL 33912	MFA2	$6,060.00	$503.37	$1,671.27	$2,174.64
09-45-25-P3-00200.8607	OLYN4673 W 3000N RDK	11901 IZARRA WAY 8607FORT MYERS, FL 33912	MFA2	$6,060.00	$503.37	$1,671.27	$2,174.64
09-45-25-P3-00200.8608	NIE L J/T11901 IZARRA WA	11901 IZARRA WAY 8608FORT MYERS, FL 33912	MFA2	$6,060.00	$503.37	$1,671.27	$2,174.64
09-45-25-P3-00200.8609	H/W2450 BRUNSWICK AVE	11901 IZARRA WAY 8609FORT MYERS, FL 33912	MFA2	$6,060.00	$503.37	$1,671.27	$2,174.64
09-45-25-P3-00200.8610	Y CLORINDA5779 3RD LIN	11901 IZARRA WAY 8610FORT MYERS, FL 33912	MFA2	$6,060.00	$503.37	$1,671.27	$2,174.64
09-45-25-P3-00200.8611	DA S829 ROCKDALE RDB	11901 IZARRA WAY 8611FORT MYERS, FL 33912	MFA2	$6,060.00	$503.37	$1,671.27	$2,174.64
09-45-25-P3-00200.8612	01 IZARRA WAY #8612FOR	11901 IZARRA WAY 8612FORT MYERS, FL 33912	MFA2	$6,060.00	$503.37	$1,671.27	$2,174.64
09-45-25-P3-00200.8701	ENOBIA C3 FRINGE CTN	11875 IZARRA WAY 8701FORT MYERS, FL 33912	MFA2	$6,060.00	$503.37	$1,671.27	$2,174.64
09-45-25-P3-00200.8702	H M8236 PROVENCIA CT F	11875 IZARRA WAY 8702FORT MYERS, FL 33912	MFA2	$6,060.00	$503.37	$1,671.27	$2,174.64
09-45-25-P3-00200.8703	+ LINDA J T/C11875 IZAR	11875 IZARRA WAY 8703FORT MYERS, FL 33912	MFA2	$6,060.00	$503.37	$1,671.27	$2,174.64
09-45-25-P3-00200.8704	EGLER TRUST509 W DEA	11875 IZARRA WAY 8704FORT MYERS, FL 33912	MFA2	$6,060.00	$503.37	$1,671.27	$2,174.64
09-45-25-P3-00200.8705	IY JEAN H/W1233 FRISBIE	11875 IZARRA WAY 8705FORT MYERS, FL 33912	MFA2	$6,060.00	$503.37	$1,671.27	$2,174.64
09-45-25-P3-00200.8706	ONFRIDDO TRUST2506 Q	11875 IZARRA WAY 8706FORT MYERS, FL 33912	MFA2	$6,060.00	$503.37	$1,671.27	$2,174.64
09-45-25-P3-00200.8707	ENEE L J/T20409 CORKSCI	11875 IZARRA WAY 8707FORT MYERS, FL 33912	MFA2	$6,060.00	$503.37	$1,671.27	$2,174.64
09-45-25-P3-00200.8708	FARM CLOSECHESTER ,	11875 IZARRA WAY 8708FORT MYERS, FL 33912	MFA2	$6,060.00	$503.37	$1,671.27	$2,174.64
09-45-25-P3-00200.8709	IZARRA WAY #8709FORT	11875 IZARRA WAY 8709FORT MYERS, FL 33912	MFA2	$6,060.00	$503.37	$1,671.27	$2,174.64
09-45-25-P3-00200.8710	DAGA PARK DRBURLING	11875 IZARRA WAY 8710FORT MYERS, FL 33912	MFA2	$6,060.00	$503.37	$1,671.27	$2,174.64
09-45-25-P3-00200.8711	45 SUNCREST DRSALINE	11875 IZARRA WAY 8711FORT MYERS, FL 33912	MFA2	$6,060.00	$503.37	$1,671.27	$2,174.64
09-45-25-P3-00200.8712	NELSON TRUST949 SPIN	11875 IZARRA WAY 8712FORT MYERS, FL 33912	MFA2	$6,060.00	$503.37	$1,671.27	$2,174.64
09-45-25-P3-00200.8801	LORI L11870 LIANA ST #8	11870 LIANA ST 8801FORT MYERS, FL 33912	MFA2	$6,060.00	$503.37	$1,671.27	$2,174.64
09-45-25-P3-00200.8802	S MARIA M H/W15 NEW H	11870 LIANA ST 8802FORT MYERS, FL 33912	MFA2	$6,060.00	$503.37	$1,671.27	$2,174.64
09-45-25-P3-00200.8803	LD JONAS11870 LIANA ST	11870 LIANA ST 8803FORT MYERS, FL 33912	MFA2	$6,060.00	$503.37	$1,671.27	$2,174.64
09-45-25-P3-00200.8804	ST PARISH RD UNIT 5SCI	11870 LIANA ST 8804FORT MYERS, FL 33912	MFA2	$6,060.00	$503.37	$1,671.27	$2,174.64
09-45-25-P3-00200.8805	N11870 LIANA ST#8805F	11870 LIANA ST 8805FORT MYERS, FL 33912	MFA2	$6,060.00	$503.37	$1,671.27	$2,174.64
09-45-25-P3-00200.8901	A11860 LIANA ST APT 89	11860 LIANA ST 8901FORT MYERS, FL 33912	MFA2	$6,060.00	$503.37	$1,671.27	$2,174.64
09-45-25-P3-00200.8902	RNOLD EXEMPT LIFETIM	11860 LIANA ST 8902FORT MYERS, FL 33912	MFA2	$6,060.00	$503.37	$1,671.27	$2,174.64
09-45-25-P3-00200.8903	H L DAVIS TRUST980 SUS	11860 LIANA ST 8903FORT MYERS, FL 33912	MFA2	$6,060.00	$503.37	$1,671.27	$2,174.64
09-45-25-P3-00200.8904	A11860 LIANA ST APT 890	11860 LIANA ST 8904FORT MYERS, FL 33912	MFA2	$6,060.00	$503.37	$1,671.27	$2,174.64
09-45-25-P3-00200.9001	1850 LIANA ST #9001FOR	11850 LIANA ST 9001FORT MYERS, FL 33912	MFA2	$6,060.00	$503.37	$1,671.27	$2,174.64
09-45-25-P3-00200.9002	AY JUNE41 STORM DRH	11850 LIANA ST 9002FORT MYERS, FL 33912	MFA2	$6,060.00	$503.37	$1,671.27	$2,174.64
09-45-25-P3-00200.9003	11850 LIANA ST #9003FO	11850 LIANA ST 9003FORT MYERS, FL 33912	MFA2	$6,060.00	$503.37	$1,671.27	$2,174.64
09-45-25-P3-00200.9004	11450 CIRCLE RIDGE CTF	11850 LIANA ST 9004FORT MYERS, FL 33912	MFA2	$6,060.00	$503.37	$1,671.27	$2,174.64
09-45-25-P3-00200.9101	0 LIANA ST #9101FORT M	11840 LIANA ST 9101FORT MYERS, FL 33912	MFA2	$6,060.00	$503.37	$1,671.27	$2,174.64
09-45-25-P3-00200.9102	+ HILARY WHELAN TRU	11840 LIANA ST 9102FORT MYERS, FL 33912	MFA2	$6,060.00	$503.37	$1,671.27	$2,174.64
09-45-25-P3-00200.9103	LC226 UPTON RDCOLCHE	11840 LIANA ST 9103FORT MYERS, FL 33912	MFA2	$6,060.00	$503.37	$1,671.27	$2,174.64
09-45-25-P3-00200.9201	HER A11988 NALDA ST#9	11988 NALDA ST 9201FORT MYERS, FL 33912	MFA2	$6,060.00	$503.37	$1,671.27	$2,174.64
09-45-25-P3-00200.9202	NE M2074 ISLAND CIRW	11988 NALDA ST 9202FORT MYERS, FL 33912	MFA2	$6,060.00	$503.37	$1,671.27	$2,174.64
09-45-25-P3-00200.9203	ANE A39135 LORIENSTER	11988 NALDA ST 9203FORT MYERS, FL 33912	MFA2	$6,060.00	$503.37	$1,671.27	$2,174.64
09-45-25-P3-00200.9204	BEVERLY A45 KNOX BLV	11988 NALDA ST 9204FORT MYERS, FL 33912	MFA2	$6,060.00	$503.37	$1,671.27	$2,174.64
09-45-25-P3-00200.9301	NBEE TRAILTORONTO O	11976 NALDA ST 9301FORT MYERS, FL 33912	MFA2	$6,060.00	$503.37	$1,671.27	$2,174.64
09-45-25-P3-00200.9302	2 PORTOFINO PLDUBLIN	11976 NALDA ST 9302FORT MYERS, FL 33912	MFA2	$6,060.00	$503.37	$1,671.27	$2,174.64
09-45-25-P3-00200.9303	/E11976 NALDA ST UNIT 9	11976 NALDA ST 9303FORT MYERS, FL 33912	MFA2	$6,060.00	$503.37	$1,671.27	$2,174.64
09-45-25-P3-00200.9304	P11976 NALDA ST # 9304F	11976 NALDA ST 9304FORT MYERS, FL 33912	MFA2	$6,060.00	$503.37	$1,671.27	$2,174.64
09-45-25-P3-00200.9401	A A 11964 NALDA ST #940	11964 NALDA ST 9401FORT MYERS, FL 33912	MFA2	$6,060.00	$503.37	$1,671.27	$2,174.64
09-45-25-P3-00200.9402	1964 NALDA ST #9402FOR	11964 NALDA ST 9402FORT MYERS, FL 33912	MFA2	$6,060.00	$503.37	$1,671.27	$2,174.64
09-45-25-P3-00200.9403	NDRA R J/T11964 NALDA	11964 NALDA ST 9403FORT MYERS, FL 33912	MFA2	$6,060.00	$503.37	$1,671.27	$2,174.64

PASEO COMMUNITY DEVELOPMENT DISTRICT
2019 ASSESSMENT LIEN ROLL

STRAP	Owner	Site Address	LU	SERIES 2018 REMAINING PRINCIPAL (1)	SERIES 2018 DEBT SERVICE	O&M	TOTAL
09-45-25-P3-00200.9404	LIE5295 LAKEMONT CTM	11964 NALDA ST 9404FORT MYERS, FL 33912	MFA2	$6,060.00	$503.37	$1,671.27	$2,174.64
09-45-25-P3-00200.9501	ARK ERIC8832 OLIVERIA	8832 OLIVERIA ST 9501FORT MYERS, FL 33912	MFA2	$6,060.00	$503.37	$1,671.27	$2,174.64
09-45-25-P3-00200.9502	ETTE8832 OLIVERIA ST #	8832 OLIVERIA ST 9502FORT MYERS, FL 33912	MFA2	$6,060.00	$503.37	$1,671.27	$2,174.64
09-45-25-P3-00200.9503	IVERIA ST #9503FORT M	8832 OLIVERIA ST 9503FORT MYERS, FL 33912	MFA2	$6,060.00	$503.37	$1,671.27	$2,174.64
09-45-25-P3-00200.9504	L RDEGG HARBOR TOWN	8832 OLIVERIA ST 9504FORT MYERS, FL 33912	MFA2	$6,060.00	$503.37	$1,671.27	$2,174.64
09-45-25-P3-00200.9505	A8832 OLIVERIA ST # 9505	8832 OLIVERIA ST 9505FORT MYERS, FL 33912	MFA2	$6,060.00	$503.37	$1,671.27	$2,174.64
09-45-25-P3-00200.9506	832 OLIVERIA ST # 9506F	8832 OLIVERIA ST 9506FORT MYERS, FL 33912	MFA2	$6,060.00	$503.37	$1,671.27	$2,174.64
09-45-25-P3-00200.9601	CCA S8856 OLIVERIA ST #	8856 OLIVERIA ST 9601FORT MYERS, FL 33912	MFA2	$6,060.00	$503.37	$1,671.27	$2,174.64
09-45-25-P3-00200.9602	CENTRAL AVE # 205WEST	8856 OLIVERIA ST 9602FORT MYERS, FL 33912	MFA2	$6,060.00	$503.37	$1,671.27	$2,174.64
09-45-25-P3-00200.9603	OLIVERIA ST # 9603FORT	8856 OLIVERIA ST 9603FORT MYERS, FL 33912	MFA2	$6,060.00	$503.37	$1,671.27	$2,174.64
09-45-25-P3-00200.9604	RUE GALILEE LN SANFO	8856 OLIVERIA ST 9604FORT MYERS, FL 33912	MFA2	$6,060.00	$503.37	$1,671.27	$2,174.64
09-45-25-P3-00200.9605	ENEE M H/W3 HAYFIELD	8856 OLIVERIA ST 9605FORT MYERS, FL 33912	MFA2	$6,060.00	$503.37	$1,671.27	$2,174.64
09-45-25-P3-00200.9606	8856 OLIVERIA ST # 9606F	8856 OLIVERIA ST 9606FORT MYERS, FL 33912	MFA2	$6,060.00	$503.37	$1,671.27	$2,174.64
09-45-25-P3-00200.9701	ESTELLE G444 KING AVE	8900 OLIVERIA ST 9701FORT MYERS, FL 33912	MFA2	$6,060.00	$503.37	$1,671.27	$2,174.64
09-45-25-P3-00200.9702	AS E8900 OLIVERIA ST # 9	8900 OLIVERIA ST 9702FORT MYERS, FL 33912	MFA2	$6,060.00	$503.37	$1,671.27	$2,174.64
09-45-25-P3-00200.9703	E2098 DEMPSTER DRCO	8900 OLIVERIA ST 9703FORT MYERS, FL 33912	MFA2	$6,060.00	$503.37	$1,671.27	$2,174.64
09-45-25-P3-00200.9704	ILY TRUST4013 HERON C	8900 OLIVERIA ST 9704FORT MYERS, FL 33912	MFA2	$6,060.00	$503.37	$1,671.27	$2,174.64
09-45-25-P3-00200.9705	S8900 OLIVERIA ST # 9705	8900 OLIVERIA ST 9705FORT MYERS, FL 33912	MFA2	$6,060.00	$503.37	$1,671.27	$2,174.64
09-45-25-P3-00200.9706	EWOOD AVE # 9706FORT	8900 OLIVERIA ST 9706FORT MYERS, FL 33912	MFA2	$6,060.00	$503.37	$1,671.27	$2,174.64
09-45-25-P3-00200.9801	N ANNA H/W11915 KEME	11915 KEMENA STFORT MYERS, FL 33912	MFA2	$6,060.00	$503.37	$1,671.27	$2,174.64
09-45-25-P3-00200.9901	01 KEMENA STFORT MY	11901 KEMENA STFORT MYERS, FL 33912	MFA2	$6,060.00	$503.37	$1,671.27	$2,174.64
09-45-25-P3-00201.0001	BARTON TRUST11893 KE	11893 KEMENA STFORT MYERS, FL 33912	MFA2	$6,060.00	$503.37	$1,671.27	$2,174.64
09-45-25-P3-00201.0101	7 KEMENA STFORT MYE	11887 KEMENA STFORT MYERS, FL 33912	MFA2	$6,060.00	$503.37	$1,671.27	$2,174.64
09-45-25-P3-00201.0201	S H/W11875 KEMENA ST	11875 KEMENA STFORT MYERS, FL 33912	MFA2	$6,060.00	$503.37	$1,671.27	$2,174.64
09-45-25-P3-00201.0301	38 CEDER RIDGES LNIN	11863 KEMENA STFORT MYERS, FL 33912	MFA2	$6,060.00	$503.37	$1,671.27	$2,174.64
09-45-25-P3-00201.0401	USAN L 1/2 T/C11851 KEM	11851 KEMENA STFORT MYERS, FL 33912	MFA2	$6,060.00	$503.37	$1,671.27	$2,174.64
09-45-25-P3-00201.0501	NE R11839 KEMENA STFO	11839 KEMENA STFORT MYERS, FL 33912	MFA2	$6,060.00	$503.37	$1,671.27	$2,174.64
09-45-25-P3-00201.0601	USAN M3 SATELLITE CIR	11827 KEMENA STFORT MYERS, FL 33912	MFA2	$6,060.00	$503.37	$1,671.27	$2,174.64
09-45-25-P3-00201.0701	I LAUREN M H/W11826 N	11826 NALDA STFORT MYERS, FL 33912	MFA2	$6,060.00	$503.37	$1,671.27	$2,174.64
09-45-25-P3-00201.0801	E10953 ESTEBAN DRFOR	11834 NALDA STFORT MYERS, FL 33912	MFA2	$6,060.00	$503.37	$1,671.27	$2,174.64
09-45-25-P3-00201.0901	57 MARKLAND CRESOTT	11846 NALDA STFORT MYERS, FL 33912	MFA2	$6,060.00	$503.37	$1,671.27	$2,174.64
09-45-25-P3-00201.1001	K2250 TIMBER CREEK D	11854 NALDA STFORT MYERS, FL 33912	MFA2	$6,060.00	$503.37	$1,671.27	$2,174.64
09-45-25-P3-00201.1101	FANIE B2544 ROYAL BLVI	11862 NALDA STFORT MYERS, FL 33912	MFA2	$6,060.00	$503.37	$1,671.27	$2,174.64
09-45-25-P3-00201.1201	EDYTH11876 NALDA ST #	11876 NALDA STFORT MYERS, FL 33912	MFA2	$6,060.00	$503.37	$1,671.27	$2,174.64
09-45-25-P3-00201.1301	LAGE CENTER DR # 210B	11886 NALDA STFORT MYERS, FL 33912	MFA2	$6,060.00	$503.37	$1,671.27	$2,174.64
09-45-25-P3-00201.1401	E71 BEECH NUT LNPORT	11894 NALDA STFORT MYERS, FL 33912	MFA2	$6,060.00	$503.37	$1,671.27	$2,174.64
09-45-25-P3-00201.1501	11902 NALDA STFORT M	11902 NALDA STFORT MYERS, FL 33912	MFA2	$6,060.00	$503.37	$1,671.27	$2,174.64
09-45-25-P3-00201.1601	7 LOCUST LANE SAG HA	11914 NALDA STFORT MYERS, FL 33912	MFA2	$6,060.00	$503.37	$1,671.27	$2,174.64
09-45-25-P3-00201.1701	URELIS J H/W11947 NALD	11947 NALDA ST 11701FORT MYERS, FL 33912	MFA2	$6,060.00	$503.37	$1,671.27	$2,174.64
09-45-25-P3-00201.1702	NE73 APRIL LNNANUET N	11947 NALDA ST 11702FORT MYERS, FL 33912	MFA2	$6,060.00	$503.37	$1,671.27	$2,174.64
09-45-25-P3-00201.1703	LE11947 NALDA ST #1170	11947 NALDA ST 11703FORT MYERS, FL 33912	MFA2	$6,060.00	$503.37	$1,671.27	$2,174.64
09-45-25-P3-00201.1704	SULATE DR APT 2HTUCK	11947 NALDA ST 11704FORT MYERS, FL 33912	MFA2	$6,060.00	$503.37	$1,671.27	$2,174.64
09-45-25-P3-00201.1705	ETTE MARIE11947 NALD	11947 NALDA ST 11705FORT MYERS, FL 33912	MFA2	$6,060.00	$503.37	$1,671.27	$2,174.64
09-45-25-P3-00201.1706	3102 EMERALD BLVDKO	11947 NALDA ST 11706FORT MYERS, FL 33912	MFA2	$6,060.00	$503.37	$1,671.27	$2,174.64
09-45-25-P3-00201.1801	ON M11931 NALDA ST #11	11931 NALDA ST 11801FORT MYERS, FL 33912	MFA2	$6,060.00	$503.37	$1,671.27	$2,174.64
09-45-25-P3-00201.1802	NALDA ST #11802FORT M	11931 NALDA ST 11802FORT MYERS, FL 33912	MFA2	$6,060.00	$503.37	$1,671.27	$2,174.64
09-45-25-P3-00201.1803	L11931 NALDA ST #11803	11931 NALDA ST 11803FORT MYERS, FL 33912	MFA2	$6,060.00	$503.37	$1,671.27	$2,174.64
09-45-25-P3-00201.1804	931 NALDA ST # 11804FO	11931 NALDA ST 11804FORT MYERS, FL 33912	MFA2	$6,060.00	$503.37	$1,671.27	$2,174.64
09-45-25-P3-00201.1805	NGLEVIEW DRCALEDON	11931 NALDA ST 11805FORT MYERS, FL 33912	MFA2	$6,060.00	$503.37	$1,671.27	$2,174.64
09-45-25-P3-00201.1806	31 NALDA ST # 11806FOR	11931 NALDA ST 11806FORT MYERS, FL 33912	MFA2	$6,060.00	$503.37	$1,671.27	$2,174.64
09-45-25-P3-00201.1901	N202 ANCHOR DRSEASID	11907 NALDA ST 11901FORT MYERS, FL 33912	MFA2	$6,060.00	$503.37	$1,671.27	$2,174.64
09-45-25-P3-00201.1902	07 NALDA ST #11902 FOR	11907 NALDA ST 11902FORT MYERS, FL 33912	MFA2	$6,060.00	$503.37	$1,671.27	$2,174.64
09-45-25-P3-00201.1903	HIPMINK HILL MOUNTAI	11907 NALDA ST 11903FORT MYERS, FL 33912	MFA2	$6,060.00	$503.37	$1,671.27	$2,174.64
09-45-25-P3-00201.1904	OOKS LIVING TRUST327 E	11907 NALDA ST 11904FORT MYERS, FL 33912	MFA2	$6,060.00	$503.37	$1,671.27	$2,174.64
09-45-25-P3-00201.1905	A11907 NALDA ST #11905	11907 NALDA ST 11905FORT MYERS, FL 33912	MFA2	$6,060.00	$503.37	$1,671.27	$2,174.64
09-45-25-P3-00201.1906	COSMOS AVEUXBRIDGE	11907 NALDA ST 11906FORT MYERS, FL 33912	MFA2	$6,060.00	$503.37	$1,671.27	$2,174.64
09-45-25-P3-00201.2001	A11893 NALDA ST # 12001	11893 NALDA ST 12001FORT MYERS, FL 33912	MFA2	$6,060.00	$503.37	$1,671.27	$2,174.64

PASEO COMMUNITY DEVELOPMENT DISTRICT
2019 ASSESSMENT LIEN ROLL

STRAP	Owner	Site Address	LU	SERIES 2018 REMAINING PRINCIPAL (1)	SERIES 2018 DEBT SERVICE	O&M	TOTAL
09-45-25-P3-00201.2002	11 LAKESHORE DRHARRI	11893 NALDA ST 12002FORT MYERS, FL 33912	MFA2	$6,060.00	$503.37	$1,671.27	$2,174.64
09-45-25-P3-00201.2003	3 NALDA ST # 12003FORT	11893 NALDA ST 12003FORT MYERS, FL 33912	MFA2	$6,060.00	$503.37	$1,671.27	$2,174.64
09-45-25-P3-00201.2004	LLC365 LEGEND VIEWWA	11893 NALDA ST 12004FORT MYERS, FL 33912	MFA2	$6,060.00	$503.37	$1,671.27	$2,174.64
09-45-25-P3-00201.2005	VASANTHI18 HEATHER CT	11893 NALDA ST 12005FORT MYERS, FL 33912	MFA2	$6,060.00	$503.37	$1,671.27	$2,174.64
09-45-25-P3-00201.2006	1893 NALDA ST #12006 F	11893 NALDA ST 12006FORT MYERS, FL 33912	MFA2	$6,060.00	$503.37	$1,671.27	$2,174.64
09-45-25-P3-00201.2101	1879 NALDA ST APT 1210	11879 NALDA ST 12101FORT MYERS, FL 33912	MFA2	$6,060.00	$503.37	$1,671.27	$2,174.64
09-45-25-P3-00201.2102	JRT H/W8300 HADDON D	11879 NALDA ST 12102FORT MYERS, FL 33912	MFA2	$6,060.00	$503.37	$1,671.27	$2,174.64
09-45-25-P3-00201.2103	SUSAN M SPREHN TRUST	11879 NALDA ST 12103FORT MYERS, FL 33912	MFA2	$6,060.00	$503.37	$1,671.27	$2,174.64
09-45-25-P3-00201.2104	1879 NALDA ST #12104FO	11879 NALDA ST 12104FORT MYERS, FL 33912	MFA2	$6,060.00	$503.37	$1,671.27	$2,174.64
09-45-25-P3-00201.2105	NDA A2503 WEST 18TH ST	11879 NALDA ST 12105FORT MYERS, FL 33912	MFA2	$6,060.00	$503.37	$1,671.27	$2,174.64
09-45-25-P3-00201.2106	LYN35 GREYCOURT AVE	11879 NALDA ST 12106FORT MYERS, FL 33912	MFA2	$6,060.00	$503.37	$1,671.27	$2,174.64
09-45-25-P3-00201.2201	ICIAL LLC11184 SPARKLE	11861 NALDA ST 12201FORT MYERS, FL 33912	MFA2	$6,060.00	$503.37	$1,671.27	$2,174.64
09-45-25-P3-00201.2202	LANNE J/T10254 ASHBRO	11861 NALDA ST 12202FORT MYERS, FL 33912	MFA2	$6,060.00	$503.37	$1,671.27	$2,174.64
09-45-25-P3-00201.2203	1861 NALDA ST # 12203FO	11861 NALDA ST 12203FORT MYERS, FL 33912	MFA2	$6,060.00	$503.37	$1,671.27	$2,174.64
09-45-25-P3-00201.2204	Y TRUST22182 ABINGTON	11861 NALDA ST 12204FORT MYERS, FL 33912	MFA2	$6,060.00	$503.37	$1,671.27	$2,174.64
09-45-25-P3-00201.2205	RUST11868 GRAND ISLES	11861 NALDA ST 12205FORT MYERS, FL 33912	MFA2	$6,060.00	$503.37	$1,671.27	$2,174.64
09-45-25-P3-00201.2206	RETTA M11861 NALDA ST	11861 NALDA ST 12206FORT MYERS, FL 33912	MFA2	$6,060.00	$503.37	$1,671.27	$2,174.64
09-45-25-P3-00201.2301	A2568 RIVERSIDE DRGRE	11847 NALDA ST 12301FORT MYERS, FL 33912	MFA2	$6,060.00	$503.37	$1,671.27	$2,174.64
09-45-25-P3-00201.2302	ATHLEEN ET AL2250 TIME	11847 NALDA ST 12302FORT MYERS, FL 33912	MFA2	$6,060.00	$503.37	$1,671.27	$2,174.64
09-45-25-P3-00201.2303	LYN SUE11847 NALDA ST	11847 NALDA ST 12303FORT MYERS, FL 33912	MFA2	$6,060.00	$503.37	$1,671.27	$2,174.64
09-45-25-P3-00201.2304	1847 NALDA ST #12304FO	11847 NALDA ST 12304FORT MYERS, FL 33912	MFA2	$6,060.00	$503.37	$1,671.27	$2,174.64
09-45-25-P3-00201.2305	ELL I236 BEARDSLEY LNI	11847 NALDA ST 12305FORT MYERS, FL 33912	MFA2	$6,060.00	$503.37	$1,671.27	$2,174.64
09-45-25-P3-00201.2306	REVOCABLE TRUST11847	11847 NALDA ST 12306FORT MYERS, FL 33912	MFA2	$6,060.00	$503.37	$1,671.27	$2,174.64
09-45-25-P4-00100.0010	GHAMMER WINNIE D433	11751 ROSALINDA CTFORT MYERS, FL 33912	SFA1	$11,881.00	$1,006.72	$1,599.18	$2,605.90
09-45-25-P4-00100.0020	DREY11757 ROSALINDA C	11757 ROSALINDA CTFORT MYERS, FL 33912	SFA1	$11,881.00	$1,006.72	$1,599.18	$2,605.90
09-45-25-P4-00100.0030	TERESA J MOLL TRUST11	11763 ROSALINDA CTFORT MYERS, FL 33912	SFA1	$11,881.00	$1,006.72	$1,599.18	$2,605.90
09-45-25-P4-00100.0040	+ NINA L HEETHER TRU	11775 ROSALINDA CTFORT MYERS, FL 33912	SFA1	$11,881.00	$1,006.72	$1,599.18	$2,605.90
09-45-25-P4-00100.0050	K11821 ROSALINDA CTF	11821 ROSALINDA CTFORT MYERS, FL 33912	SFA1	$11,881.00	$1,006.72	$1,599.18	$2,605.90
09-45-25-P4-00100.0060	ANDRA K TRAUB TRUST1	11831 ROSALINDA CTFORT MYERS, FL 33912	SFA1	$11,881.00	$1,006.72	$1,599.18	$2,605.90
09-45-25-P4-00100.0070	MARY11839 ROSALINDA	11839 ROSALINDA CTFORT MYERS, FL 33912	SFA1	$11,881.00	$1,006.72	$1,599.18	$2,605.90
09-45-25-P4-00100.0080	N WEST SILVER LAKE RI	11845 ROSALINDA CTFORT MYERS, FL 33912	SFA1	$11,881.00	$1,006.72	$1,599.18	$2,605.90
09-45-25-P4-00100.0090	JULIE ANN5418 ANCESTR	11851 ROSALINDA CTFORT MYERS, FL 33912	SFA1	$11,881.00	$1,006.72	$1,599.18	$2,605.90
09-45-25-P4-00100.0100	NNE7991 EVERGREEN TR	11863 ROSALINDA CTFORT MYERS, FL 33912	SFA1	$11,881.00	$1,006.72	$1,599.18	$2,605.90
09-45-25-P4-00100.0110	E D11869 ROSALINDA CT	11869 ROSALINDA CTFORT MYERS, FL 33912	SFA1	$11,881.00	$1,006.72	$1,599.18	$2,605.90
09-45-25-P4-00100.0120	ROSARIO T/C9 SHEFFIEL	11875 ROSALINDA CTFORT MYERS, FL 33912	SFA1	$11,881.00	$1,006.72	$1,599.18	$2,605.90
09-45-25-P4-00100.0130	NTS LLC2905 WEST 100 N	11879 ROSALINDA CTFORT MYERS, FL 33912	SFA1	$11,881.00	$1,006.72	$1,599.18	$2,605.90
09-45-25-P4-00100.0140	ROSALINDA CTFORT MY	11883 ROSALINDA CTFORT MYERS, FL 33912	SFA1	$11,881.00	$1,006.72	$1,599.18	$2,605.90
09-45-25-P4-00100.0150	H L3028 PARKLAND DRW	11889 ROSALINDA CTFORT MYERS, FL 33912	SFA1	$11,881.00	$1,006.72	$1,599.18	$2,605.90
09-45-25-P4-00100.0160	D11890 ROSALINDA CTF	11890 ROSALINDA CTFORT MYERS, FL 33912	SFA1	$11,881.00	$1,006.72	$1,599.18	$2,605.90
09-45-25-P4-00100.0170	L11884 ROSALINDA CTF	11884 ROSALINDA CTFORT MYERS, FL 33912	SFA1	$11,881.00	$1,006.72	$1,599.18	$2,605.90
09-45-25-P4-00100.0180	ZACCHEO TRUST11878 R	11878 ROSALINDA CTFORT MYERS, FL 33912	SFA1	$11,881.00	$1,006.72	$1,599.18	$2,605.90
09-45-25-P4-00100.0190	A11872 ROSALINDA CTFO	11872 ROSALINDA CTFORT MYERS, FL 33912	SFA1	$11,881.00	$1,006.72	$1,599.18	$2,605.90
09-45-25-P4-00100.0200	DA J11866 ROSALINDA C	11866 ROSALINDA CTFORT MYERS, FL 33912	SFA1	$11,881.00	$1,006.72	$1,599.18	$2,605.90
09-45-25-P4-00100.0210	0 FRESHMAN LNFORT M	11860 ROSALINDA CTFORT MYERS, FL 33912	SFA1	$11,881.00	$1,006.72	$1,599.18	$2,605.90
09-45-25-P4-00100.0220	Y TRUST22182 ABINGTON	11854 ROSALINDA CTFORT MYERS, FL 33912	SFA1	$11,881.00	$1,006.72	$1,599.18	$2,605.90
09-45-25-P4-00100.0230	ERS LLC500 YORK STREE	11848 ROSALINDA CTFORT MYERS, FL 33912	SFA1	$11,881.00	$1,006.72	$1,599.18	$2,605.90
09-45-25-P4-00100.0240	LYN11842 ROSALINDA C	11842 ROSALINDA CTFORT MYERS, FL 33912	SFA1	$11,881.00	$1,006.72	$1,599.18	$2,605.90
09-45-25-P4-00100.0250	N11836 ROSALINDA CTF	11836 ROSALINDA CTFORT MYERS, FL 33912	SFA1	$11,881.00	$1,006.72	$1,599.18	$2,605.90
09-45-25-P4-00100.0260	1830 ROSALINDA CTFORT	11830 ROSALINDA CTFORT MYERS, FL 33912	SFA1	$11,881.00	$1,006.72	$1,599.18	$2,605.90
09-45-25-P4-00100.0270	R GAFFEY TRUST29897 F	11824 ROSALINDA CTFORT MYERS, FL 33912	SFA1	$11,881.00	$1,006.72	$1,599.18	$2,605.90
09-45-25-P4-00100.0280	Y H/W1735 THE COLLEGE	11818 ROSALINDA CTFORT MYERS, FL 33912	SFA1	$11,881.00	$1,006.72	$1,599.18	$2,605.90
09-45-25-P4-00100.0290	H N702 DEMPSEY RDWE	11812 ROSALINDA CTFORT MYERS, FL 33912	SFA1	$11,881.00	$1,006.72	$1,599.18	$2,605.90
09-45-25-P4-00100.0300	ERESA M8106 FELISA CTF	8106 FELISA CTFORT MYERS, FL 33912	SFA1	$11,881.00	$1,006.72	$1,599.18	$2,605.90
09-45-25-P4-00100.0310	ORALMA H/W8112 FELIS	8112 FELISA CTFORT MYERS, FL 33912	SFA1	$11,881.00	$1,006.72	$1,599.18	$2,605.90
09-45-25-P4-00100.0320	LLE8118 FELISA CTFORT	8118 FELISA CTFORT MYERS, FL 33912	SFA1	$11,881.00	$1,006.72	$1,599.18	$2,605.90
09-45-25-P4-00100.0330	MULLEN TRUST5304 SHAI	8115 FELISA CTFORT MYERS, FL 33912	SFA1	$11,881.00	$1,006.72	$1,599.18	$2,605.90
09-45-25-P4-00100.0340	PORITO TRUST99 BRIAR	8103 FELISA CTFORT MYERS, FL 33912	SFA1	$0.00	$0.00	$1,599.18	$1,599.18

PASEO COMMUNITY DEVELOPMENT DISTRICT
2019 ASSESSMENT LIEN ROLL

STRAP	Owner	Site Address	LU	SERIES 2018 REMAINING PRINCIPAL (1)	SERIES 2018 DEBT SERVICE	O&M	TOTAL
09-45-25-P4-00100.0350	ROSALINDA CTFORT MYI	11776 ROSALINDA CTFORT MYERS, FL 33912	SFA1	$11,881.00	$1,006.72	$1,599.18	$2,605.90
09-45-25-P4-00100.0360	A M8186 ARCHER LN NM	11770 ROSALINDA CTFORT MYERS, FL 33912	SFA1	$11,881.00	$1,006.72	$1,599.18	$2,605.90
09-45-25-P4-00100.0370	COL MIDORI11764 ROSAI	11764 ROSALINDA CTFORT MYERS, FL 33912	SFA1	$11,881.00	$1,006.72	$1,599.18	$2,605.90
09-45-25-P4-00100.0380	NBERG TRUST13331 MEI	11758 ROSALINDA CTFORT MYERS, FL 33912	SFA1	$11,881.00	$1,006.72	$1,599.18	$2,605.90
09-45-25-P4-00100.0390	L A J/T11752 ROSALINDA	11752 ROSALINDA CTFORT MYERS, FL 33912	SFA1	$11,881.00	$1,006.72	$1,599.18	$2,605.90
09-45-25-P4-00100.0400	LINDA L5 SANDGATE PL	8351 PROVENCIA CTFORT MYERS, FL 33912	SFA1	$11,881.00	$1,006.72	$1,599.18	$2,605.90
09-45-25-P4-00100.0410	DENISE T/C18 BRESIDE S	8347 PROVENCIA CTFORT MYERS, FL 33912	SFA1	$11,881.00	$1,006.72	$1,599.18	$2,605.90
09-45-25-P4-00100.0420	OLE8343 PROVENCIA CTI	8343 PROVENCIA CTFORT MYERS, FL 33912	SFA1	$11,881.00	$1,006.72	$1,599.18	$2,605.90
09-45-25-P4-00100.0430	V7680 MULBERRY CTNA	8339 PROVENCIA CTFORT MYERS, FL 33912	SFA1	$11,881.00	$1,006.72	$1,599.18	$2,605.90
09-45-25-P4-00100.0440	DGE TRUST +FOR RALPH	8335 PROVENCIA CTFORT MYERS, FL 33912	SFA1	$11,881.00	$1,006.72	$1,599.18	$2,605.90
09-45-25-P4-00100.0450	SHWOOD DRCAMBRIDG	8331 PROVENCIA CTFORT MYERS, FL 33912	SFA1	$11,881.00	$1,006.72	$1,599.18	$2,605.90
09-45-25-P4-00100.0460	IV8327 PROVENCIA CTFC	8327 PROVENCIA CTFORT MYERS, FL 33912	SFA1	$11,881.00	$1,006.72	$1,599.18	$2,605.90
09-45-25-P4-00100.0470	LIFF TRUST8323 PROVEN	8323 PROVENCIA CTFORT MYERS, FL 33912	SFA1	$11,881.00	$1,006.72	$1,599.18	$2,605.90
09-45-25-P4-00100.0480	ELUCA TRUST8319 PROVI	8319 PROVENCIA CTFORT MYERS, FL 33912	SFA1	$11,881.00	$1,006.72	$1,599.18	$2,605.90
09-45-25-P4-00100.0490	RUSTRMK ENTERPRISES	8315 PROVENCIA CTFORT MYERS, FL 33912	SFA1	$11,881.00	$1,006.72	$1,599.18	$2,605.90
09-45-25-P4-00100.0500	R FOR FEIOCK TRUST8311	8311 PROVENCIA CTFORT MYERS, FL 33912	SFA1	$11,881.00	$1,006.72	$1,599.18	$2,605.90
09-45-25-P4-00100.0510	7 PROVENCIA CTFORT MY	8307 PROVENCIA CTFORT MYERS, FL 33912	SFA1	$11,881.00	$1,006.72	$1,599.18	$2,605.90
09-45-25-P4-00100.0520	RT LAND TRUST# 357130	8303 PROVENCIA CTFORT MYERS, FL 33912	SFA1	$11,881.00	$1,006.72	$1,599.18	$2,605.90
09-45-25-P4-00100.0530	PROVENCIA CTFORT MYI	8299 PROVENCIA CTFORT MYERS, FL 33912	SFA1	$11,881.00	$1,006.72	$1,599.18	$2,605.90
09-45-25-P4-00100.0540	ST13078 CRANE ST NWC	8295 PROVENCIA CTFORT MYERS, FL 33912	SFA1	$11,881.00	$1,006.72	$1,599.18	$2,605.90
09-45-25-P4-00100.0550	ALPH FAMILY TRUST8771	8291 PROVENCIA CTFORT MYERS, FL 33912	SFA1	$11,881.00	$1,006.72	$1,599.18	$2,605.90
09-45-25-P4-00100.0560	K SUNA16900 MEETING I	8287 PROVENCIA CTFORT MYERS, FL 33912	SFA1	$11,881.00	$1,006.72	$1,599.18	$2,605.90
09-45-25-P4-00100.0570	1 RIVERSIDE DR W STE 3	8283 PROVENCIA CTFORT MYERS, FL 33912	SFA1	$11,881.00	$1,006.72	$1,599.18	$2,605.90
09-45-25-P4-00100.0580	ONNELL TRUST8279 PRO	8279 PROVENCIA CTFORT MYERS, FL 33912	SFA1	$11,881.00	$1,006.72	$1,599.18	$2,605.90
09-45-25-P4-00100.0590	M7 STONEHEDGE DRWIL	8275 PROVENCIA CTFORT MYERS, FL 33912	SFA1	$11,881.00	$1,006.72	$1,599.18	$2,605.90
09-45-25-P4-00100.0600	RUST335 S NANAGOSA T	8271 PROVENCIA CTFORT MYERS, FL 33912	SFA1	$11,881.00	$1,006.72	$1,599.18	$2,605.90
09-45-25-P4-00100.0610	JUDITH I JOHNSON TRU	8267 PROVENCIA CTFORT MYERS, FL 33912	SFA1	$11,881.00	$1,006.72	$1,599.18	$2,605.90
09-45-25-P4-00100.0620	S+ LIDIA26 BRIARWOOD	8263 PROVENCIA CTFORT MYERS, FL 33912	SFA1	$11,881.00	$1,006.72	$1,599.18	$2,605.90
09-45-25-P4-00100.0630	PROVENCIA CTFORT MY	8259 PROVENCIA CTFORT MYERS, FL 33912	SFA1	$11,881.00	$1,006.72	$1,599.18	$2,605.90
09-45-25-P4-00100.0640	SUZANNE M8255 PROVEN	8255 PROVENCIA CTFORT MYERS, FL 33912	SFA1	$11,881.00	$1,006.72	$1,599.18	$2,605.90
09-45-25-P4-00100.0650	251 PROVENCIA CTFORT	8251 PROVENCIA CTFORT MYERS, FL 33912	SFA1	$11,881.00	$1,006.72	$1,599.18	$2,605.90
09-45-25-P4-00100.0660	A WIGHTMAN TRUST824	8247 PROVENCIA CTFORT MYERS, FL 33912	SFA1	$11,881.00	$1,006.72	$1,599.18	$2,605.90
09-45-25-P4-00100.0670	8243 PROVENCIA CTFOR	8243 PROVENCIA CTFORT MYERS, FL 33912	SFA1	$11,881.00	$1,006.72	$1,599.18	$2,605.90
09-45-25-P4-00100.0680	PE DENISE25 AVALON DR	8239 PROVENCIA CTFORT MYERS, FL 33912	SFA1	$11,881.00	$1,006.72	$1,599.18	$2,605.90
09-45-25-P4-00100.0690	DR VINSON FAMILY TRUS	8235 PROVENCIA CTFORT MYERS, FL 33912	SFA1	$11,881.00	$1,006.72	$1,599.18	$2,605.90
09-45-25-P4-00100.0700	8231 PROVENCIA CTFORT	8231 PROVENCIA CTFORT MYERS, FL 33912	SFA1	$11,881.00	$1,006.72	$1,599.18	$2,605.90
09-45-25-P4-00100.0730	M8236 PROVENCIA CTF	8236 PROVENCIA CTFORT MYERS, FL 33912	SFA1	$11,881.00	$1,006.72	$1,599.18	$2,605.90
09-45-25-P4-00100.0740	NICOLE L8244 PROVENCI	8244 PROVENCIA CTFORT MYERS, FL 33912	SFA1	$11,881.00	$1,006.72	$1,599.18	$2,605.90
09-45-25-P4-00100.0750	M8248 PROVENCIA CTFOI	8248 PROVENCIA CTFORT MYERS, FL 33912	SFA1	$11,881.00	$1,006.72	$1,599.18	$2,605.90
09-45-25-P4-00100.0760	MARILYN E12649 HORSE	8260 PROVENCIA CTFORT MYERS, FL 33912	SFA1	$11,881.00	$1,006.72	$1,599.18	$2,605.90
09-45-25-P4-00100.0770	C1024 PINE LAKE COVEC	8272 PROVENCIA CTFORT MYERS, FL 33912	SFA1	$11,881.00	$1,006.72	$1,599.18	$2,605.90
09-45-25-P4-00100.0780	LI JOHN RAYMOND90 EN	8274 PROVENCIA CTFORT MYERS, FL 33912	SFA1	$11,881.00	$1,006.72	$1,599.18	$2,605.90
09-45-25-P4-00100.0790	URIY Z 20% T/C1152 SW 4	8276 PROVENCIA CTFORT MYERS, FL 33912	SFA1	$11,881.00	$1,006.72	$1,599.18	$2,605.90
09-45-25-P4-00100.0800	A P929 HUMES RIDGE RD	8280 PROVENCIA CTFORT MYERS, FL 33912	SFA1	$11,881.00	$1,006.72	$1,599.18	$2,605.90
09-45-25-P4-00100.0810	N TRUSTFOR COLLEEN M	8284 PROVENCIA CTFORT MYERS, FL 33912	SFA1	$11,881.00	$1,006.72	$1,599.18	$2,605.90
09-45-25-P4-00100.0820	SPRINGDALE RDCROMV	8300 PROVENCIA CTFORT MYERS, FL 33912	SFA1	$11,881.00	$1,006.72	$1,599.18	$2,605.90
09-45-25-P4-00100.0830	PARK AVMINNEAPOLIS I	8314 PROVENCIA CTFORT MYERS, FL 33912	SFA1	$11,881.00	$1,006.72	$1,599.18	$2,605.90
09-45-25-P4-00100.0840	U TRUST15762 CLAIRE C	8328 PROVENCIA CTFORT MYERS, FL 33912	SFA1	$11,881.00	$1,006.72	$1,599.18	$2,605.90
09-45-25-P4-00100.0850	7 COMANCHE CTKATONA	8332 PROVENCIA CTFORT MYERS, FL 33912	SFA1	$11,881.00	$1,006.72	$1,599.18	$2,605.90
09-45-25-P4-00100.0860	L7680 MULBERRY CTNAI	8334 PROVENCIA CTFORT MYERS, FL 33912	SFA1	$11,881.00	$1,006.72	$1,599.18	$2,605.90
09-45-25-P4-00100.0870	ROSARIO T/C9 SHEFFIEL	8336 PROVENCIA CTFORT MYERS, FL 33912	SFA1	$11,881.00	$1,006.72	$1,599.18	$2,605.90
09-45-25-P4-00100.0880	H8338 PROVENCIA CTFO	8338 PROVENCIA CTFORT MYERS, FL 33912	SFA1	$11,881.00	$1,006.72	$1,599.18	$2,605.90
09-45-25-P4-00100.0890	RMONY PARK DRBONITA	8342 PROVENCIA CTFORT MYERS, FL 33912	SFA1	$11,881.00	$1,006.72	$1,599.18	$2,605.90
09-45-25-P4-00100.0900	Y R550 25TH AVE NSAINT	8346 PROVENCIA CTFORT MYERS, FL 33912	SFA1	$11,881.00	$1,006.72	$1,599.18	$2,605.90
09-45-25-P4-00100.0910	AL TR8350 PROVENCIA C	8350 PROVENCIA CTFORT MYERS, FL 33912	SFA1	$11,881.00	$1,006.72	$1,599.18	$2,605.90
09-45-25-P4-0010A.0400	INC12750 CITRUS PARK L	RIGHT OF WAYFORT MYERS, FL	0	$0.00	$0.00	$0.00	$0.00
09-45-25-P4-0010A.0500	INC12750 CITRUS PARK L	RIGHT OF WAYFORT MYERS, FL	0	$0.00	$0.00	$0.00	$0.00

PASEO COMMUNITY DEVELOPMENT DISTRICT
2019 ASSESSMENT LIEN ROLL

STRAP	Owner	Site Address	LU	SERIES 2018 REMAINING PRINCIPAL (1)	SERIES 2018 DEBT SERVICE	O&M	TOTAL
09-45-25-P4-0010C.0010	INC12750 CITRUS PARK L	SUBMERGEDFORT MYERS, FL	0	$0.00	$0.00	$0.00	$0.00
09-45-25-P4-0010C.0020	INC12750 CITRUS PARK L	SUBMERGEDFORT MYERS, FL	0	$0.00	$0.00	$0.00	$0.00
09-45-25-P4-0010C.0030	INC12750 CITRUS PARK L	SUBMERGEDFORT MYERS, FL	0	$0.00	$0.00	$0.00	$0.00
09-45-25-P4-0010C.0040	INC12750 CITRUS PARK L	SUBMERGEDFORT MYERS, FL	0	$0.00	$0.00	$0.00	$0.00
09-45-25-P4-0010C.0050	INC12750 CITRUS PARK L	SUBMERGEDFORT MYERS, FL	0	$0.00	$0.00	$0.00	$0.00
09-45-25-P4-0010E.0050	INC12750 CITRUS PARK L	PASEO C/EFORT MYERS, FL	0	$0.00	$0.00	$0.00	$0.00
09-45-25-P4-0010E.0060	INC12750 CITRUS PARK L	PASEO C/EFORT MYERS, FL	0	$0.00	$0.00	$0.00	$0.00
09-45-25-P4-00200.0101	DIKO M8132 BIBIANA WA	8132 BIBIANA WAY 101FORT MYERS, FL 33912	MFA1	$5,940.00	$503.37	$1,671.27	$2,174.64
09-45-25-P4-00200.0102	URIE ANNE H/W8132 BIBI	8132 BIBIANA WAY 102FORT MYERS, FL 33912	MFA2	$6,060.00	$503.37	$1,671.27	$2,174.64
09-45-25-P4-00200.0103	4721 41ST ST APT 4FSUN	8132 BIBIANA WAY 103FORT MYERS, FL 33912	MFA1	$5,940.00	$503.37	$1,671.27	$2,174.64
09-45-25-P4-00200.0104	ANNA J/T8186 ARCHER LN	8132 BIBIANA WAY 104FORT MYERS, FL 33912	MFA1	$5,940.00	$503.37	$1,671.27	$2,174.64
09-45-25-P4-00200.0201	IN N5706 PARKWOOD DR	8116 BIBIANA WAY 201FORT MYERS, FL 33912	MFA1	$5,940.00	$503.37	$1,671.27	$2,174.64
09-45-25-P4-00200.0202	EL J4133 HEYWARD PLIN	8116 BIBIANA WAY 202FORT MYERS, FL 33912	MFA1	$5,940.00	$503.37	$1,671.27	$2,174.64
09-45-25-P4-00200.0203	LLCPO BOX 1484BONITA	8116 BIBIANA WAY 203FORT MYERS, FL 33912	MFA1	$5,940.00	$503.37	$1,671.27	$2,174.64
09-45-25-P4-00200.0204	8116 BIBIANA WAY #204F	8116 BIBIANA WAY 204FORT MYERS, FL 33912	MFA1	$5,940.00	$503.37	$1,671.27	$2,174.64
09-45-25-P4-00200.0301	CRAB THICKET LNSAINT	8163 BIBIANA WAY 301FORT MYERS, FL 33912	MFA1	$5,940.00	$503.37	$1,671.27	$2,174.64
09-45-25-P4-00200.0302	JSZ A4 LAMPLIGHTER LN	8163 BIBIANA WAY 302FORT MYERS, FL 33912	MFA1	$5,940.00	$503.37	$1,671.27	$2,174.64
09-45-25-P4-00200.0303	INE FREDA J/TBOX 160EL	8163 BIBIANA WAY 303FORT MYERS, FL 33912	MFA1	$5,940.00	$503.37	$1,671.27	$2,174.64
09-45-25-P4-00200.0304	MOLLY A4251 JOHN SHIE	8163 BIBIANA WAY 304FORT MYERS, FL 33912	MFA1	$5,940.00	$503.37	$1,671.27	$2,174.64
09-45-25-P4-00200.0305	3842 DEER VALLEY LNM	8163 BIBIANA WAY 305FORT MYERS, FL 33912	MFA1	$5,940.00	$503.37	$1,671.27	$2,174.64
09-45-25-P4-00200.0306	ADLEY J W/H28350 E 6TH	8163 BIBIANA WAY 306FORT MYERS, FL 33912	MFA1	$5,940.00	$503.37	$1,671.27	$2,174.64
09-45-25-P4-00200.0307	CHRISTI L J/T1315 WHISP	8163 BIBIANA WAY 307FORT MYERS, FL 33912	MFA1	$5,940.00	$503.37	$1,671.27	$2,174.64
09-45-25-P4-00200.0308	251 GARDEN RDBELNAN	8163 BIBIANA WAY 308FORT MYERS, FL 33912	MFA1	$5,940.00	$503.37	$1,671.27	$2,174.64
09-45-25-P4-00200.0309	REEN VALLEY RDNEW W	8163 BIBIANA WAY 309FORT MYERS, FL 33912	MFA1	$5,940.00	$503.37	$1,671.27	$2,174.64
09-45-25-P4-00200.0310	D6084 WINNEBAGO STGR	8163 BIBIANA WAY 310FORT MYERS, FL 33912	MFA1	$5,940.00	$503.37	$1,671.27	$2,174.64
09-45-25-P4-00200.0401	ARY230 SCENIC CTCHES	8209 BIBIANA WAY 401FORT MYERS, FL 33912	MFA1	$5,940.00	$503.37	$1,671.27	$2,174.64
09-45-25-P4-00200.0402	5 CRYSTAL BASIN DRCOL	8209 BIBIANA WAY 402FORT MYERS, FL 33912	MFA1	$5,940.00	$503.37	$1,671.27	$2,174.64
09-45-25-P4-00200.0403	UNTY ROAD 22EMERYV	8209 BIBIANA WAY 403FORT MYERS, FL 33912	MFA1	$5,940.00	$503.37	$1,671.27	$2,174.64
09-45-25-P4-00200.0404	A LAMBARDIA FORT MYE	8209 BIBIANA WAY 404FORT MYERS, FL 33912	MFA1	$5,940.00	$503.37	$1,671.27	$2,174.64
09-45-25-P4-00200.0405	REN LEE2200 PINEHURST	8209 BIBIANA WAY 405FORT MYERS, FL 33912	MFA1	$5,940.00	$503.37	$1,671.27	$2,174.64
09-45-25-P4-00200.0406	VANDERVEER TRUST100	8209 BIBIANA WAY 406FORT MYERS, FL 33912	MFA1	$5,940.00	$503.37	$1,671.27	$2,174.64
09-45-25-P4-00200.0407	RICK D T/C518 NORTH STI	8209 BIBIANA WAY 407FORT MYERS, FL 33912	MFA1	$5,940.00	$503.37	$1,671.27	$2,174.64
09-45-25-P4-00200.0408	N162 PINE NECK AVEEAS	8209 BIBIANA WAY 408FORT MYERS, FL 33912	MFA1	$5,940.00	$503.37	$1,671.27	$2,174.64
09-45-25-P4-00200.0409	IE108 OVERLOOK DREAS	8209 BIBIANA WAY 409FORT MYERS, FL 33912	MFA1	$5,940.00	$503.37	$1,671.27	$2,174.64
09-45-25-P4-00200.0410	RUSTSTE 1165237 SUMMI	8209 BIBIANA WAY 410FORT MYERS, FL 33912	MFA1	$5,940.00	$503.37	$1,671.27	$2,174.64
09-45-25-P4-00200.0501	67 BIBIANA WAY #501FO	8067 BIBIANA WAY 501FORT MYERS, FL 33912	MFA1	$5,940.00	$503.37	$1,671.27	$2,174.64
09-45-25-P4-00200.0502	ST2293 FOXFIELD RDOAK	8067 BIBIANA WAY 502FORT MYERS, FL 33912	MFA1	$5,940.00	$503.37	$1,671.27	$2,174.64
09-45-25-P4-00200.0503	67 BIBIANA WAY #503FOR	8067 BIBIANA WAY 503FORT MYERS, FL 33912	MFA1	$5,940.00	$503.37	$1,671.27	$2,174.64
09-45-25-P4-00200.0504	N8067 BIBIANA WAY #504	8067 BIBIANA WAY 504FORT MYERS, FL 33912	MFA1	$5,940.00	$503.37	$1,671.27	$2,174.64
09-45-25-P4-00200.0505	M COVIELLO TRUST209 V	8067 BIBIANA WAY 505FORT MYERS, FL 33912	MFA1	$5,940.00	$503.37	$1,671.27	$2,174.64
09-45-25-P4-00200.0506	A M8067 BIBIANA WAY #5	8067 BIBIANA WAY 506FORT MYERS, FL 33912	MFA1	$5,940.00	$503.37	$1,671.27	$2,174.64
09-45-25-P4-00200.0507	67 BIBIANA WAY APT 507	8067 BIBIANA WAY 507FORT MYERS, FL 33912	MFA1	$5,940.00	$503.37	$1,671.27	$2,174.64
09-45-25-P4-00200.0508	ZABETH8067 BIBIANA WA	8067 BIBIANA WAY 508FORT MYERS, FL 33912	MFA1	$5,940.00	$503.37	$1,671.27	$2,174.64
09-45-25-P4-00200.0509	LC7580 KNIGHTWING CIR	8067 BIBIANA WAY 509FORT MYERS, FL 33912	MFA1	$5,940.00	$503.37	$1,671.27	$2,174.64
09-45-25-P4-00200.0510	M OWEN JOINT TENANC	8067 BIBIANA WAY 510FORT MYERS, FL 33912	MFA1	$5,940.00	$503.37	$1,671.27	$2,174.64
09-45-25-P4-00200.0601	2180 CONNER COVE LNI	8091 BIBIANA WAY 601FORT MYERS, FL 33912	MFA1	$5,940.00	$503.37	$1,671.27	$2,174.64
09-45-25-P4-00200.0602	ELLSTRASSE 50ZH-8400 V	8091 BIBIANA WAY 602FORT MYERS, FL 33912	MFA1	$5,940.00	$503.37	$1,671.27	$2,174.64
09-45-25-P4-00200.0603	BIBIANA WAY # 603FORT	8091 BIBIANA WAY 603FORT MYERS, FL 33912	MFA1	$5,940.00	$503.37	$1,671.27	$2,174.64
09-45-25-P4-00200.0604	RCIO LOUIS JOSEPH J/T1	8091 BIBIANA WAY 604FORT MYERS, FL 33912	MFA1	$5,940.00	$503.37	$1,671.27	$2,174.64
09-45-25-P4-00200.0605	BIBIANA WAY #605FORT	8091 BIBIANA WAY 605FORT MYERS, FL 33912	MFA1	$5,940.00	$503.37	$1,671.27	$2,174.64
09-45-25-P4-00200.0606	EN910 OAKLAND BLVDC	8091 BIBIANA WAY 606FORT MYERS, FL 33912	MFA1	$5,940.00	$503.37	$1,671.27	$2,174.64
09-45-25-P4-00200.0607	HELLE ANNE3734 MONA	8091 BIBIANA WAY 607FORT MYERS, FL 33912	MFA1	$5,940.00	$503.37	$1,671.27	$2,174.64
09-45-25-P4-00200.0608	BIBIANA WAY #608FORT M	8091 BIBIANA WAY 608FORT MYERS, FL 33912	MFA1	$5,940.00	$503.37	$1,671.27	$2,174.64
09-45-25-P4-00200.0609	SAN41 PEACOCK LNNOR	8091 BIBIANA WAY 609FORT MYERS, FL 33912	MFA1	$5,940.00	$503.37	$1,671.27	$2,174.64
09-45-25-P4-00200.0610	KIMBERLY R49 HORSHO	8091 BIBIANA WAY 610FORT MYERS, FL 33912	MFA1	$5,940.00	$503.37	$1,671.27	$2,174.64
09-45-25-P4-00200.0701	ONES TRUST6800 GRAYS	8243 BIBIANA WAY 701FORT MYERS, FL 33912	MFA1	$5,940.00	$503.37	$1,671.27	$2,174.64
09-45-25-P4-00200.0702	ALIE5295 LAKEMONT CT	8243 BIBIANA WAY 702FORT MYERS, FL 33912	MFA1	$5,940.00	$503.37	$1,671.27	$2,174.64

PASEO COMMUNITY DEVELOPMENT DISTRICT
2019 ASSESSMENT LIEN ROLL

STRAP	Owner	Site Address	LU	SERIES 2018 REMAINING PRINCIPAL (1)	SERIES 2018 DEBT SERVICE	O&M	TOTAL
09-45-25-P4-00200.0703	L J/T8243 BIBIANA WAY #	8243 BIBIANA WAY 703FORT MYERS, FL 33912	MFA1	$5,940.00	$503.37	$1,671.27	$2,174.64
09-45-25-P4-00200.0704	N T/C1503 BRAMOOR DR	8243 BIBIANA WAY 704FORT MYERS, FL 33912	MFA1	$5,940.00	$503.37	$1,671.27	$2,174.64
09-45-25-P4-00200.0705	9888 COLONIAL WALK N	8243 BIBIANA WAY 705FORT MYERS, FL 33912	MFA1	$5,940.00	$503.37	$1,671.27	$2,174.64
09-45-25-P4-00200.0706	9658 N 1175 WMONTICE	8243 BIBIANA WAY 706FORT MYERS, FL 33912	MFA1	$5,940.00	$503.37	$1,671.27	$2,174.64
09-45-25-P4-00200.0801	BIANA WAY #801FORT MY	8281 BIBIANA WAY 801FORT MYERS, FL 33912	MFA1	$5,940.00	$503.37	$1,671.27	$2,174.64
09-45-25-P4-00200.0802	NNIFER H/W8281 BIBIAN	8281 BIBIANA WAY 802FORT MYERS, FL 33912	MFA1	$5,940.00	$503.37	$1,671.27	$2,174.64
09-45-25-P4-00200.0803	8281 BIBIANA WAY APT 8	8281 BIBIANA WAY 803FORT MYERS, FL 33912	MFA1	$5,940.00	$503.37	$1,671.27	$2,174.64
09-45-25-P4-00200.0804	NICOLE604 MCKINLEY AV	8281 BIBIANA WAY 804FORT MYERS, FL 33912	MFA1	$5,940.00	$503.37	$1,671.27	$2,174.64
09-45-25-P4-00200.0805	ER12691 CHARTWELL DR	8281 BIBIANA WAY 805FORT MYERS, FL 33912	MFA1	$5,940.00	$503.37	$1,671.27	$2,174.64
09-45-25-P4-00200.0806	1 BIBIANA WAY #806FOR	8281 BIBIANA WAY 806FORT MYERS, FL 33912	MFA1	$5,940.00	$503.37	$1,671.27	$2,174.64
09-45-25-P4-00200.0901	MER WINNIE D18337 PEN	11945 ALEGRIA ST 901FORT MYERS, FL 33912	MFA1	$5,940.00	$503.37	$1,671.27	$2,174.64
09-45-25-P4-00200.0902	JST 50% +FOR DARLENE	11945 ALEGRIA ST 902FORT MYERS, FL 33912	MFA1	$5,940.00	$503.37	$1,671.27	$2,174.64
09-45-25-P4-00200.0903	ALEGRIA ST # 903FORT M	11945 ALEGRIA ST 903FORT MYERS, FL 33912	MFA1	$5,940.00	$503.37	$1,671.27	$2,174.64
09-45-25-P4-00200.0904	VICK LIVING TRUST335 W	11945 ALEGRIA ST 904FORT MYERS, FL 33912	MFA1	$5,940.00	$503.37	$1,671.27	$2,174.64
09-45-25-P4-00200.0905	1945 ALEGRIA ST #905FO	11945 ALEGRIA ST 905FORT MYERS, FL 33912	MFA1	$5,940.00	$503.37	$1,671.27	$2,174.64
09-45-25-P4-00200.0906	NDA303 OSPREY PASSHU	11945 ALEGRIA ST 906FORT MYERS, FL 33912	MFA1	$5,940.00	$503.37	$1,671.27	$2,174.64
09-45-25-P4-00200.1001	NE C951 N WATERWAY DR	8312 BIBIANA WAY 1001FORT MYERS, FL 33912	MFA1	$5,940.00	$503.37	$1,671.27	$2,174.64
09-45-25-P4-00200.1002	CE HOUSEEBORACUM W	8312 BIBIANA WAY 1002FORT MYERS, FL 33912	MFA1	$5,940.00	$503.37	$1,671.27	$2,174.64
09-45-25-P4-00200.1003	W +WILLIAMS BLAKE E	8312 BIBIANA WAY 1003FORT MYERS, FL 33912	MFA1	$5,940.00	$503.37	$1,671.27	$2,174.64
09-45-25-P4-00200.1004	LEEN M14587 KILDARE S	8312 BIBIANA WAY 1004FORT MYERS, FL 33912	MFA1	$5,940.00	$503.37	$1,671.27	$2,174.64
09-45-25-P4-00200.1101	1 VIA LOMBARDIA CTFO	8340 DELICIA ST 1101FORT MYERS, FL 33912	MFA1	$5,940.00	$503.37	$1,671.27	$2,174.64
09-45-25-P4-00200.1102	8340 DELICIA ST # 1102F	8340 DELICIA ST 1102FORT MYERS, FL 33912	MFA1	$5,940.00	$503.37	$1,671.27	$2,174.64
09-45-25-P4-00200.1103	DELICIA ST UNIT 1103F	8340 DELICIA ST 1103FORT MYERS, FL 33912	MFA1	$5,940.00	$503.37	$1,671.27	$2,174.64
09-45-25-P4-00200.1104	L11332 PASEO DRFORT M	8340 DELICIA ST 1104FORT MYERS, FL 33912	MFA1	$5,940.00	$503.37	$1,671.27	$2,174.64
09-45-25-P4-00200.1105	RICIA 1928 SE 32 ND TER	8340 DELICIA ST 1105FORT MYERS, FL 33912	MFA1	$5,940.00	$503.37	$1,671.27	$2,174.64
09-45-25-P4-00200.1106	H/W8340 DELICIA ST #11	8340 DELICIA ST 1106FORT MYERS, FL 33912	MFA1	$5,940.00	$503.37	$1,671.27	$2,174.64
09-45-25-P4-00200.1201	ADONCIA WAY #1201FOR	11990 ADONCIA WAY 1201FORT MYERS, FL 33912	MFA1	$5,940.00	$503.37	$1,671.27	$2,174.64
09-45-25-P4-00200.1202	DONCIA WAY #1202FORT	11990 ADONCIA WAY 1202FORT MYERS, FL 33912	MFA1	$5,940.00	$503.37	$1,671.27	$2,174.64
09-45-25-P4-00200.1203	ADONCIA WAY # 1203FOR	11990 ADONCIA WAY 1203FORT MYERS, FL 33912	MFA1	$5,940.00	$503.37	$1,671.27	$2,174.64
09-45-25-P4-00200.1204	THA P7450 INDUSTRIAL R	11990 ADONCIA WAY 1204FORT MYERS, FL 33912	MFA1	$5,940.00	$503.37	$1,671.27	$2,174.64
09-45-25-P4-00200.1301	T LLCPO BOX 431BOHEM	8323 DELICIA ST 1301FORT MYERS, FL 33912	MFA1	$5,940.00	$503.37	$1,671.27	$2,174.64
09-45-25-P4-00200.1302	IE8323 DELICIA ST # 1302	8323 DELICIA ST 1302FORT MYERS, FL 33912	MFA1	$5,940.00	$503.37	$1,671.27	$2,174.64
09-45-25-P4-00200.1303	A8323 DELICIA ST #1303	8323 DELICIA ST 1303FORT MYERS, FL 33912	MFA1	$5,940.00	$503.37	$1,671.27	$2,174.64
09-45-25-P4-00200.1304	23 DELICIA ST #1304FORT	8323 DELICIA ST 1304FORT MYERS, FL 33912	MFA1	$5,940.00	$503.37	$1,671.27	$2,174.64
09-45-25-P4-00200.1305	SON RDNORTH MYRTLE	8323 DELICIA ST 1305FORT MYERS, FL 33912	MFA1	$5,940.00	$503.37	$1,671.27	$2,174.64
09-45-25-P4-00200.1306	DELICIA ST #1306FORT M	8323 DELICIA ST 1306FORT MYERS, FL 33912	MFA1	$5,940.00	$503.37	$1,671.27	$2,174.64
09-45-25-P4-00200.1307	LIA E8323 DELICIA ST # 1	8323 DELICIA ST 1307FORT MYERS, FL 33912	MFA1	$5,940.00	$503.37	$1,671.27	$2,174.64
09-45-25-P4-00200.1308	DELICIA ST APT 1308FORT	8323 DELICIA ST 1308FORT MYERS, FL 33912	MFA1	$5,940.00	$503.37	$1,671.27	$2,174.64
09-45-25-P4-00200.1309	BOX 384SAG HARBOR NY	8323 DELICIA ST 1309FORT MYERS, FL 33912	MFA1	$5,940.00	$503.37	$1,671.27	$2,174.64
09-45-25-P4-00200.1310	NA8323 DELICIA ST #1310	8323 DELICIA ST 1310FORT MYERS, FL 33912	MFA1	$5,940.00	$503.37	$1,671.27	$2,174.64
09-45-25-P4-00200.1401	A H/W14 JACOBS LANDI	8349 DELICIA ST 1401FORT MYERS, FL 33912	MFA1	$5,940.00	$503.37	$1,671.27	$2,174.64
09-45-25-P4-00200.1402	9 DELICIA ST # 1402FORT	8349 DELICIA ST 1402FORT MYERS, FL 33912	MFA1	$5,940.00	$503.37	$1,671.27	$2,174.64
09-45-25-P4-00200.1403	RNARD330 NOTRE DAME	8349 DELICIA ST 1403FORT MYERS, FL 33912	MFA1	$5,940.00	$503.37	$1,671.27	$2,174.64
09-45-25-P4-00200.1404	NT LLCPO BOX 431BOHE	8349 DELICIA ST 1404FORT MYERS, FL 33912	MFA1	$5,940.00	$503.37	$1,671.27	$2,174.64
09-45-25-P4-00200.1405	AN KPO BOX 8MABOU N	8349 DELICIA ST 1405FORT MYERS, FL 33912	MFA1	$5,940.00	$503.37	$1,671.27	$2,174.64
09-45-25-P4-00200.1406	9 DEER RUN DRWATERL	8349 DELICIA ST 1406FORT MYERS, FL 33912	MFA1	$5,940.00	$503.37	$1,671.27	$2,174.64
09-45-25-P4-00200.1407	6 CARRIAGE LNNEW FA	8349 DELICIA ST 1407FORT MYERS, FL 33912	MFA1	$5,940.00	$503.37	$1,671.27	$2,174.64
09-45-25-P4-00200.1408	LI D11011 PARROT DRPE	8349 DELICIA ST 1408FORT MYERS, FL 33912	MFA1	$5,940.00	$503.37	$1,671.27	$2,174.64
09-45-25-P4-00200.1409	CAREN M BARANIK TRUS	8349 DELICIA ST 1409FORT MYERS, FL 33912	MFA1	$5,940.00	$503.37	$1,671.27	$2,174.64
09-45-25-P4-00200.1410	A8349 DELICIA ST #1410F	8349 DELICIA ST 1410FORT MYERS, FL 33912	MFA1	$5,940.00	$503.37	$1,671.27	$2,174.64
09-45-25-P4-00200.1501	ANGELA A1036 W 3RD S	8346 ESPERANZA ST 1501FORT MYERS, FL 33912	MFA1	$5,940.00	$503.37	$1,671.27	$2,174.64
09-45-25-P4-00200.1502	H/W180 SHERWOOD DRO	8346 ESPERANZA ST 1502FORT MYERS, FL 33912	MFA1	$5,940.00	$503.37	$1,671.27	$2,174.64
09-45-25-P4-00200.1503	ROL38 MIDFIELD DRROC	8346 ESPERANZA ST 1503FORT MYERS, FL 33912	MFA1	$5,940.00	$503.37	$1,671.27	$2,174.64
09-45-25-P4-00200.1504	EPO BOX 239GUILFORD	8346 ESPERANZA ST 1504FORT MYERS, FL 33912	MFA1	$5,940.00	$503.37	$1,671.27	$2,174.64
09-45-25-P4-00200.1505	009 MOOREHOUSE PL FO	8346 ESPERANZA ST 1505FORT MYERS, FL 33912	MFA1	$5,940.00	$503.37	$1,671.27	$2,174.64
09-45-25-P4-00200.1506	SCOTT + MONICA GIAC	8346 ESPERANZA ST 1506FORT MYERS, FL 33912	MFA1	$5,940.00	$503.37	$1,671.27	$2,174.64
09-45-25-P4-00200.1507	ERANZA ST UNIT 1507FO	8346 ESPERANZA ST 1507FORT MYERS, FL 33912	MFA1	$5,940.00	$503.37	$1,671.27	$2,174.64

PASEO COMMUNITY DEVELOPMENT DISTRICT
2019 ASSESSMENT LIEN ROLL

STRAP	Owner	Site Address	LU	SERIES 2018 REMAINING PRINCIPAL (1)	SERIES 2018 DEBT SERVICE	O&M	TOTAL
09-45-25-P4-00200.1508	RY SUZANNA1450 FLAGI	8346 ESPERANZA ST 1508FORT MYERS, FL 33912	MFA1	$5,940.00	$503.37	$1,671.27	$2,174.64
09-45-25-P4-00200.1509	ESPERANZA ST#1509FO	8346 ESPERANZA ST 1509FORT MYERS, FL 33912	MFA1	$5,940.00	$503.37	$1,671.27	$2,174.64
09-45-25-P4-00200.1510	WATSON AVEOAKVILLE	8346 ESPERANZA ST 1510FORT MYERS, FL 33912	MFA1	$5,940.00	$503.37	$1,671.27	$2,174.64
09-45-25-P4-00200.1601	T SERVICES 8320 ESPER	8320 ESPERANZA ST 1601FORT MYERS, FL 33912	MFA1	$5,940.00	$503.37	$1,671.27	$2,174.64
09-45-25-P4-00200.1602	G23520 ROAD 110OAKW	8320 ESPERANZA ST 1602FORT MYERS, FL 33912	MFA1	$5,940.00	$503.37	$1,671.27	$2,174.64
09-45-25-P4-00200.1603	CHOLEK TRUSTFOR DRE	8320 ESPERANZA ST 1603FORT MYERS, FL 33912	MFA1	$5,940.00	$503.37	$1,671.27	$2,174.64
09-45-25-P4-00200.1604	ILTON LAKE RDSUDBUR	8320 ESPERANZA ST 1604FORT MYERS, FL 33912	MFA1	$5,940.00	$503.37	$1,671.27	$2,174.64
09-45-25-P4-00200.1605	HERWOOD DROTTAWA O	8320 ESPERANZA ST 1605FORT MYERS, FL 33912	MFA1	$5,940.00	$503.37	$1,671.27	$2,174.64
09-45-25-P4-00200.1606	20 ESPERANZA ST #1606F	8320 ESPERANZA ST 1606FORT MYERS, FL 33912	MFA1	$5,940.00	$503.37	$1,671.27	$2,174.64
09-45-25-P4-00200.1607	SHEA D6478 CLEARY RDL	8320 ESPERANZA ST 1607FORT MYERS, FL 33912	MFA1	$5,940.00	$503.37	$1,671.27	$2,174.64
09-45-25-P4-00200.1608	LAFFERTY AVELASALLE	8320 ESPERANZA ST 1608FORT MYERS, FL 33912	MFA1	$5,940.00	$503.37	$1,671.27	$2,174.64
09-45-25-P4-00200.1609	O BOX 398EMERYVILLE C	8320 ESPERANZA ST 1609FORT MYERS, FL 33912	MFA1	$5,940.00	$503.37	$1,671.27	$2,174.64
09-45-25-P4-00200.1610	Y LLC409 NORTH MAIN S	8320 ESPERANZA ST 1610FORT MYERS, FL 33912	MFA1	$5,940.00	$503.37	$1,671.27	$2,174.64
09-45-25-P4-00200.1701	LIE5295 LAKEMONT CTM	11882 ROCIO ST 1701FORT MYERS, FL 33912	MFA1	$5,940.00	$503.37	$1,671.27	$2,174.64
09-45-25-P4-00200.1702	2 ROCIO ST # 1702FORT M	11882 ROCIO ST 1702FORT MYERS, FL 33912	MFA1	$5,940.00	$503.37	$1,671.27	$2,174.64
09-45-25-P4-00200.1703	C11882 ROCIO ST #1703F	11882 ROCIO ST 1703FORT MYERS, FL 33912	MFA1	$5,940.00	$503.37	$1,671.27	$2,174.64
09-45-25-P4-00200.1704	LE352 HARRISON AVEMA	11882 ROCIO ST 1704FORT MYERS, FL 33912	MFA1	$5,940.00	$503.37	$1,671.27	$2,174.64
09-45-25-P4-00200.1705	E L11882 ROCIO ST #1705	11882 ROCIO ST 1705FORT MYERS, FL 33912	MFA1	$5,940.00	$503.37	$1,671.27	$2,174.64
09-45-25-P4-00200.1801	M SUSAN B J/TPO BOX 23	11874 ROCIO ST 1801FORT MYERS, FL 33912	MFA1	$5,940.00	$503.37	$1,671.27	$2,174.64
09-45-25-P4-00200.1802	AURIE ANNE8132 BIBIAN	11874 ROCIO ST 1802FORT MYERS, FL 33912	MFA1	$5,940.00	$503.37	$1,671.27	$2,174.64
09-45-25-P4-00200.1803	ROCIO ST # 1803FORT MY	11874 ROCIO ST 1803FORT MYERS, FL 33912	MFA1	$5,940.00	$503.37	$1,671.27	$2,174.64
09-45-25-P4-00200.1804	15037 CARRICK RD NOBI	11874 ROCIO ST 1804FORT MYERS, FL 33912	MFA1	$5,940.00	$503.37	$1,671.27	$2,174.64
09-45-25-P4-00200.1901	NNIE J/T11862 ROCIO ST #	11862 ROCIO ST 1901FORT MYERS, FL 33912	MFA1	$5,940.00	$503.37	$1,671.27	$2,174.64
09-45-25-P4-00200.1902	-21 41ST ST APT 4FSUNNY	11862 ROCIO ST 1902FORT MYERS, FL 33912	MFA1	$5,940.00	$503.37	$1,671.27	$2,174.64
09-45-25-P4-00200.1903	OCIO ST APT 1903FORT M	11862 ROCIO ST 1903FORT MYERS, FL 33912	MFA1	$5,940.00	$503.37	$1,671.27	$2,174.64
09-45-25-P4-00200.1904	MICHELLE A CLESCERI TR	11862 ROCIO ST 1904FORT MYERS, FL 33912	MFA1	$5,940.00	$503.37	$1,671.27	$2,174.64
09-45-25-P4-00200.2001	WN HEIRS OF QUEEN ME	11856 ROCIO ST 2001FORT MYERS, FL 33912	MFA1	$5,940.00	$503.37	$1,671.27	$2,174.64
09-45-25-P4-00200.2002	MENT LLCPO BOX 431BC	11856 ROCIO ST 2002FORT MYERS, FL 33912	MFA1	$5,940.00	$503.37	$1,671.27	$2,174.64
09-45-25-P4-00200.2003	H N702 DEMPSEY RDWE	11856 ROCIO ST 2003FORT MYERS, FL 33912	MFA1	$5,940.00	$503.37	$1,671.27	$2,174.64
09-45-25-P4-00200.2101	A11880 ADONCIA WAY #2	11880 ADONCIA WAY 2101FORT MYERS, FL 33912	MFA1	$5,940.00	$503.37	$1,671.27	$2,174.64
09-45-25-P4-00200.2102	OCABLE LIVING TRUST11	11880 ADONCIA WAY 2102FORT MYERS, FL 33912	MFA1	$5,940.00	$503.37	$1,671.27	$2,174.64
09-45-25-P4-00200.2103	FOR MAGNUSON FAMILY	11880 ADONCIA WAY 2103FORT MYERS, FL 33912	MFA1	$5,940.00	$503.37	$1,671.27	$2,174.64
09-45-25-P4-00200.2104	A6 TIMBER CT RR1GEOR	11880 ADONCIA WAY 2104FORT MYERS, FL 33912	MFA1	$5,940.00	$503.37	$1,671.27	$2,174.64
09-45-25-P4-00200.2105	NO TRUSTFOR MARINA P	11880 ADONCIA WAY 2105FORT MYERS, FL 33912	MFA1	$5,940.00	$503.37	$1,671.27	$2,174.64
09-45-25-P4-00200.2106	TINA15 KENSINGTON AVE	11880 ADONCIA WAY 2106FORT MYERS, FL 33912	MFA1	$5,940.00	$503.37	$1,671.27	$2,174.64
09-45-25-P4-00200.2107	ONCIA WAY #2107FORT M	11880 ADONCIA WAY 2107FORT MYERS, FL 33912	MFA1	$5,940.00	$503.37	$1,671.27	$2,174.64
09-45-25-P4-00200.2108	145 LAGRANGE STWEST	11880 ADONCIA WAY 2108FORT MYERS, FL 33912	MFA1	$5,940.00	$503.37	$1,671.27	$2,174.64
09-45-25-P4-00200.2109	ERYL L23 DEERFIELD TE	11880 ADONCIA WAY 2109FORT MYERS, FL 33912	MFA1	$5,940.00	$503.37	$1,671.27	$2,174.64
09-45-25-P4-00200.2110	EN J/T21 STAPLETONS RI	11880 ADONCIA WAY 2110FORT MYERS, FL 33912	MFA1	$5,940.00	$503.37	$1,671.27	$2,174.64
09-45-25-P4-00200.2111	LYN J/T2 KATE-MARIE PI	11880 ADONCIA WAY 2111FORT MYERS, FL 33912	MFA1	$5,940.00	$503.37	$1,671.27	$2,174.64
09-45-25-P4-00200.2112	ANTOINEVAL DES MONT	11880 ADONCIA WAY 2112FORT MYERS, FL 33912	MFA1	$5,940.00	$503.37	$1,671.27	$2,174.64
09-45-25-P4-00200.2201	OR MICHELLE SMITH LIV	11866 ADONCIA WAY 2201FORT MYERS, FL 33912	MFA2	$6,060.00	$503.37	$1,671.27	$2,174.64
09-45-25-P4-00200.2202	6 ADONCIA WAY #2202FO	11866 ADONCIA WAY 2202FORT MYERS, FL 33912	MFA1	$5,940.00	$503.37	$1,671.27	$2,174.64
09-45-25-P4-00200.2203	E H/W1114 FIELDSTONE	11866 ADONCIA WAY 2203FORT MYERS, FL 33912	MFA1	$5,940.00	$503.37	$1,671.27	$2,174.64
09-45-25-P4-00200.2204	HEN A400 S ASH AVEGAL	11866 ADONCIA WAY 2204FORT MYERS, FL 33912	MFA2	$6,060.00	$503.37	$1,671.27	$2,174.64
09-45-25-P4-00200.2205	ONCIA WAY #2205FORT M	11866 ADONCIA WAY 2205FORT MYERS, FL 33912	MFA1	$5,940.00	$503.37	$1,671.27	$2,174.64
09-45-25-P4-00200.2206	1866 ADONCIA WAY #220	11866 ADONCIA WAY 2206FORT MYERS, FL 33912	MFA2	$6,060.00	$503.37	$1,671.27	$2,174.64
09-45-25-P4-00200.2207	ADONCIA WAY#2207FORT	11866 ADONCIA WAY 2207FORT MYERS, FL 33912	MFA2	$6,060.00	$503.37	$1,671.27	$2,174.64
09-45-25-P4-00200.2208	OR JOHANNE LABRECQU	11866 ADONCIA WAY 2208FORT MYERS, FL 33912	MFA1	$5,940.00	$503.37	$1,671.27	$2,174.64
09-45-25-P4-00200.2209	HELLE L J/T4430 WAYSID	11866 ADONCIA WAY 2209FORT MYERS, FL 33912	MFA2	$6,060.00	$503.37	$1,671.27	$2,174.64
09-45-25-P4-00200.2210	1866 ADONCIA WAY #221	11866 ADONCIA WAY 2210FORT MYERS, FL 33912	MFA1	$5,940.00	$503.37	$1,671.27	$2,174.64
09-45-25-P4-00200.2211	WIMBLEDON WAYMARL	11866 ADONCIA WAY 2211FORT MYERS, FL 33912	MFA2	$6,060.00	$503.37	$1,671.27	$2,174.64
09-45-25-P4-00200.2212	USTA H/W97 PEACH TREE	11866 ADONCIA WAY 2212FORT MYERS, FL 33912	MFA2	$6,060.00	$503.37	$1,671.27	$2,174.64
09-45-25-P4-00200.2301	RA A4 BROCKETT RDWAL	11996 TULIO WAY 2301FORT MYERS, FL 33912	MFA1	$5,940.00	$503.37	$1,671.27	$2,174.64
09-45-25-P4-00200.2302	DANIEL A4 LEA CTGARN	11996 TULIO WAY 2302FORT MYERS, FL 33912	MFA1	$5,940.00	$503.37	$1,671.27	$2,174.64
09-45-25-P4-00200.2303	RGE + MONIKA TSITSOS T	11996 TULIO WAY 2303FORT MYERS, FL 33912	MFA1	$5,940.00	$503.37	$1,671.27	$2,174.64
09-45-25-P4-00200.2304	1996 TULIO WAY #2304FC	11996 TULIO WAY 2304FORT MYERS, FL 33912	MFA1	$5,940.00	$503.37	$1,671.27	$2,174.64

PASEO COMMUNITY DEVELOPMENT DISTRICT
2019 ASSESSMENT LIEN ROLL

STRAP	Owner	Site Address	LU	SERIES 2018 REMAINING PRINCIPAL (1)	SERIES 2018 DEBT SERVICE	O&M	TOTAL
09-45-25-P4-00200.2305	RA WIGHTMAN TRUST824	11996 TULIO WAY 2305FORT MYERS, FL 33912	MFA1	$5,940.00	$503.37	$1,671.27	$2,174.64
09-45-25-P4-00200.2306	NE A17 RICHARD PLMASS	11996 TULIO WAY 2306FORT MYERS, FL 33912	MFA1	$5,940.00	$503.37	$1,671.27	$2,174.64
09-45-25-P4-00200.2401	TULIO WAY #2401FORT MY	11980 TULIO WAY 2401FORT MYERS, FL 33912	MFA1	$5,940.00	$503.37	$1,671.27	$2,174.64
09-45-25-P4-00200.2402	NIFER55 S OAKLEAF RDA	11980 TULIO WAY 2402FORT MYERS, FL 33912	MFA1	$5,940.00	$503.37	$1,671.27	$2,174.64
09-45-25-P4-00200.2403	NE M DAHL TRUST12491	11980 TULIO WAY 2403FORT MYERS, FL 33912	MFA1	$5,940.00	$503.37	$1,671.27	$2,174.64
09-45-25-P4-00200.2404	TULIO WAY #2404FORT M	11980 TULIO WAY 2404FORT MYERS, FL 33912	MFA1	$5,940.00	$503.37	$1,671.27	$2,174.64
09-45-25-P4-00200.2405	K E J/T39 GRASSLANDS (	11980 TULIO WAY 2405FORT MYERS, FL 33912	MFA1	$5,940.00	$503.37	$1,671.27	$2,174.64
09-45-25-P4-00200.2406	11450 CIRCLE RIDGE CTF	11980 TULIO WAY 2406FORT MYERS, FL 33912	MFA1	$5,940.00	$503.37	$1,671.27	$2,174.64
09-45-25-P4-00200.2501	AS F J/T315 SEVENTH AV	11964 TULIO WAY 2501FORT MYERS, FL 33912	MFA1	$5,940.00	$503.37	$1,671.27	$2,174.64
09-45-25-P4-00200.2502	11964 TULIO WAY #2502F(	11964 TULIO WAY 2502FORT MYERS, FL 33912	MFA1	$5,940.00	$503.37	$1,671.27	$2,174.64
09-45-25-P4-00200.2503	RA S11964 TULIO WAY # 2	11964 TULIO WAY 2503FORT MYERS, FL 33912	MFA1	$5,940.00	$503.37	$1,671.27	$2,174.64
09-45-25-P4-00200.2504	REEN L25 WINDING BRC	11964 TULIO WAY 2504FORT MYERS, FL 33912	MFA1	$0.00	$0.00	$1,671.27	$1,671.27
09-45-25-P4-00200.2601	CH SARA J/T219 TREETO	11948 TULIO WAY 2601FORT MYERS, FL 33912	MFA1	$5,940.00	$503.37	$1,671.27	$2,174.64
09-45-25-P4-00200.2602	C20 BARBARA RDRAND	11948 TULIO WAY 2602FORT MYERS, FL 33912	MFA1	$5,940.00	$503.37	$1,671.27	$2,174.64
09-45-25-P4-00200.2603	EEN S11948 TULIO WAY#	11948 TULIO WAY 2603FORT MYERS, FL 33912	MFA1	$5,940.00	$503.37	$1,671.27	$2,174.64
09-45-25-P4-00200.2604	YE R BERROYA TRUSTW	11948 TULIO WAY 2604FORT MYERS, FL 33912	MFA1	$5,940.00	$503.37	$1,671.27	$2,174.64
09-45-25-P4-00200.2605	E11948 TULIO WAY #2605	11948 TULIO WAY 2605FORT MYERS, FL 33912	MFA1	$5,940.00	$503.37	$1,671.27	$2,174.64
09-45-25-P4-00200.2606	+ JOY E1105 LORRAINE (	11948 TULIO WAY 2606FORT MYERS, FL 33912	MFA1	$5,940.00	$503.37	$1,671.27	$2,174.64
09-45-25-P4-00200.2701	N C7890 KINGSBURY DRI	11947 ADONCIA WAY 2701FORT MYERS, FL 33912	MFA1	$5,940.00	$503.37	$1,671.27	$2,174.64
09-45-25-P4-00200.2702	T COMPANY770 W GLAD	11947 ADONCIA WAY 2702FORT MYERS, FL 33912	MFA1	$5,940.00	$503.37	$1,671.27	$2,174.64
09-45-25-P4-00200.2703	1947 ADONCIA WAY #270	11947 ADONCIA WAY 2703FORT MYERS, FL 33912	MFA1	$5,940.00	$503.37	$1,671.27	$2,174.64
09-45-25-P4-00200.2704	RBARA ANN 1/2530 LAFF	11947 ADONCIA WAY 2704FORT MYERS, FL 33912	MFA1	$5,940.00	$503.37	$1,671.27	$2,174.64
09-45-25-P4-00200.2705	BURY RDSOUTH ABINGT	11947 ADONCIA WAY 2705FORT MYERS, FL 33912	MFA1	$5,940.00	$503.37	$1,671.27	$2,174.64
09-45-25-P4-00200.2706	F604 MAGNOLIA STBAY	11947 ADONCIA WAY 2706FORT MYERS, FL 33912	MFA1	$5,940.00	$503.37	$1,671.27	$2,174.64
09-45-25-P4-00200.2707	LY9 BROADMOOR CTLA	11947 ADONCIA WAY 2707FORT MYERS, FL 33912	MFA1	$5,940.00	$503.37	$1,671.27	$2,174.64
09-45-25-P4-00200.2708	NE JEANNA L208 WARRE	11947 ADONCIA WAY 2708FORT MYERS, FL 33912	MFA1	$5,940.00	$503.37	$1,671.27	$2,174.64
09-45-25-P4-00200.2801	11923 ADONCIA WAY #28	11923 ADONCIA WAY 2801FORT MYERS, FL 33912	MFA1	$5,940.00	$503.37	$1,671.27	$2,174.64
09-45-25-P4-00200.2802	RLY A7312 STOCKWOOD	11923 ADONCIA WAY 2802FORT MYERS, FL 33912	MFA1	$5,940.00	$503.37	$1,671.27	$2,174.64
09-45-25-P4-00200.2803	65 ED ESSICK RDLEXING	11923 ADONCIA WAY 2803FORT MYERS, FL 33912	MFA1	$5,940.00	$503.37	$1,671.27	$2,174.64
09-45-25-P4-00200.2804	23 ADONCIA WAY #2804F(	11923 ADONCIA WAY 2804FORT MYERS, FL 33912	MFA1	$5,940.00	$503.37	$1,671.27	$2,174.64
09-45-25-P4-00200.2805	ENICE HOUSEEBORACU	11923 ADONCIA WAY 2805FORT MYERS, FL 33912	MFA1	$5,940.00	$503.37	$1,671.27	$2,174.64
09-45-25-P4-00200.2806	8 CORPORATE WAYWEST	11923 ADONCIA WAY 2806FORT MYERS, FL 33912	MFA1	$5,940.00	$503.37	$1,671.27	$2,174.64
09-45-25-P4-00200.2901	R LAMPINEN11924 TULIC	11924 TULIO WAY 2901FORT MYERS, FL 33912	MFA1	$5,940.00	$503.37	$1,671.27	$2,174.64
09-45-25-P4-00200.2902	TUARY WAYBONITA SPRI	11924 TULIO WAY 2902FORT MYERS, FL 33912	MFA1	$5,940.00	$503.37	$1,671.27	$2,174.64
09-45-25-P4-00200.2903	I MICHAEL JAMES641 QU	11924 TULIO WAY 2903FORT MYERS, FL 33912	MFA1	$5,940.00	$503.37	$1,671.27	$2,174.64
09-45-25-P4-00200.2904	24 TULIO WAY #2904FOR	11924 TULIO WAY 2904FORT MYERS, FL 33912	MFA1	$5,940.00	$503.37	$1,671.27	$2,174.64
09-45-25-P4-00200.2905	24 TULIO WAY #2905FORT	11924 TULIO WAY 2905FORT MYERS, FL 33912	MFA1	$5,940.00	$503.37	$1,671.27	$2,174.64
09-45-25-P4-00200.2906	TOPHER A11924 TULIO W	11924 TULIO WAY 2906FORT MYERS, FL 33912	MFA1	$5,940.00	$503.37	$1,671.27	$2,174.64
09-45-25-P4-00200.3001	NA MAGDALENA351 WHI	11907 ADONCIA WAY 3001FORT MYERS, FL 33912	MFA1	$5,940.00	$503.37	$1,671.27	$2,174.64
09-45-25-P4-00200.3002	DONCIA WAY #3002FORT	11907 ADONCIA WAY 3002FORT MYERS, FL 33912	MFA1	$5,940.00	$503.37	$1,671.27	$2,174.64
09-45-25-P4-00200.3003	907 ADONCIA WAY #3003	11907 ADONCIA WAY 3003FORT MYERS, FL 33912	MFA1	$5,940.00	$503.37	$1,671.27	$2,174.64
09-45-25-P4-00200.3004	IANE K3430 STRATFORD	11907 ADONCIA WAY 3004FORT MYERS, FL 33912	MFA1	$5,940.00	$503.37	$1,671.27	$2,174.64
09-45-25-P4-00200.3005	4 BRYMAN RD RR 2THOR	11907 ADONCIA WAY 3005FORT MYERS, FL 33912	MFA1	$5,940.00	$503.37	$1,671.27	$2,174.64
09-45-25-P4-00200.3006	ICHELLE L5981 BRIGIDS	11907 ADONCIA WAY 3006FORT MYERS, FL 33912	MFA1	$5,940.00	$503.37	$1,671.27	$2,174.64
09-45-25-P4-00200.3101	NEL- GROULXSAINT-AU(	11908 TULIO WAY 3101FORT MYERS, FL 33912	MFA1	$5,940.00	$503.37	$1,671.27	$2,174.64
09-45-25-P4-00200.3102	GREY FRIAS CTFORT MY	11908 TULIO WAY 3102FORT MYERS, FL 33912	MFA1	$5,940.00	$503.37	$1,671.27	$2,174.64
09-45-25-P4-00200.3103	RY1632 51ST ST S APT 32	11908 TULIO WAY 3103FORT MYERS, FL 33912	MFA1	$5,940.00	$503.37	$1,671.27	$2,174.64
09-45-25-P4-00200.3104	ULLI461 PAVILION AVEW	11908 TULIO WAY 3104FORT MYERS, FL 33912	MFA1	$5,940.00	$503.37	$1,671.27	$2,174.64
09-45-25-P4-00200.3105	C16150 PERFORMANCE V	11908 TULIO WAY 3105FORT MYERS, FL 33912	MFA1	$5,940.00	$503.37	$1,671.27	$2,174.64
09-45-25-P4-00200.3106	LLC1036 W 3RD STDUBU	11908 TULIO WAY 3106FORT MYERS, FL 33912	MFA1	$5,940.00	$503.37	$1,671.27	$2,174.64
09-45-25-P4-00200.3201	855 ADONCIA WAY # 3201	11855 ADONCIA WAY 3201FORT MYERS, FL 33912	MFA2	$6,060.00	$503.37	$1,671.27	$2,174.64
09-45-25-P4-00200.3202	11855 ADONCIA WAY #32(	11855 ADONCIA WAY 3202FORT MYERS, FL 33912	MFA2	$6,060.00	$503.37	$1,671.27	$2,174.64
09-45-25-P4-00200.3203	116 BIBIANNA WAY UNIT	11855 ADONCIA WAY 3203FORT MYERS, FL 33912	MFA2	$6,060.00	$503.37	$1,671.27	$2,174.64
09-45-25-P4-00200.3204	3955 MIDDLE RDCANANI	11855 ADONCIA WAY 3204FORT MYERS, FL 33912	MFA2	$6,060.00	$503.37	$1,671.27	$2,174.64
09-45-25-P4-00200.3205	E L2388 COPPER CREEK I	11855 ADONCIA WAY 3205FORT MYERS, FL 33912	MFA2	$6,060.00	$503.37	$1,671.27	$2,174.64
09-45-25-P4-00200.3206	ADONCIA WAY #3206FOR	11855 ADONCIA WAY 3206FORT MYERS, FL 33912	MFA2	$6,060.00	$503.37	$1,671.27	$2,174.64
09-45-25-P4-00200.3301	7 SYCAMORE HOLLOW L	11852 TULIO WAY 3301FORT MYERS, FL 33912	MFA2	$6,060.00	$503.37	$1,671.27	$2,174.64

PASEO COMMUNITY DEVELOPMENT DISTRICT
2019 ASSESSMENT LIEN ROLL

STRAP	Owner	Site Address	LU	SERIES 2018 REMAINING PRINCIPAL (1)	SERIES 2018 DEBT SERVICE	O&M	TOTAL
09-45-25-P4-00200.3302	42 LINDRON AVESMITHT	11852 TULIO WAY 3302FORT MYERS, FL 33912	MFA2	$6,060.00	$503.37	$1,671.27	$2,174.64
09-45-25-P4-00200.3303	3 DUNMORE LNWILLIST	11852 TULIO WAY 3303FORT MYERS, FL 33912	MFA2	$6,060.00	$503.37	$1,671.27	$2,174.64
09-45-25-P4-00200.3304	YCE A2 CHEROKEE SUNS	11852 TULIO WAY 3304FORT MYERS, FL 33912	MFA2	$6,060.00	$503.37	$1,671.27	$2,174.64
09-45-25-P4-00200.3305	HELLE M H/W11852 TULI	11852 TULIO WAY 3305FORT MYERS, FL 33912	MFA2	$6,060.00	$503.37	$1,671.27	$2,174.64
09-45-25-P4-00200.3306	J/T11852 TULIO WAY #33	11852 TULIO WAY 3306FORT MYERS, FL 33912	MFA2	$6,060.00	$503.37	$1,671.27	$2,174.64
09-45-25-P4-00200.3401	ANDREWUNIT 2220 BOX	11837 ADONCIA WAY 3401FORT MYERS, FL 33912	MFA2	$6,060.00	$503.37	$1,671.27	$2,174.64
09-45-25-P4-00200.3402	837 ADONCIA WAY #3402	11837 ADONCIA WAY 3402FORT MYERS, FL 33912	MFA2	$6,060.00	$503.37	$1,671.27	$2,174.64
09-45-25-P4-00200.3403	H/W167 BIRKSHIRE DRA	11837 ADONCIA WAY 3403FORT MYERS, FL 33912	MFA2	$6,060.00	$503.37	$1,671.27	$2,174.64
09-45-25-P4-00200.3404	ONFRIDDO TRUST2506 Q	11837 ADONCIA WAY 3404FORT MYERS, FL 33912	MFA2	$6,060.00	$503.37	$1,671.27	$2,174.64
09-45-25-P4-00200.3405	R JOSEPH11837 ADONCIA	11837 ADONCIA WAY 3405FORT MYERS, FL 33912	MFA2	$6,060.00	$503.37	$1,671.27	$2,174.64
09-45-25-P4-00200.3406	0 ROUTE 16SHIPMAN IL,	11837 ADONCIA WAY 3406FORT MYERS, FL 33912	MFA2	$6,060.00	$503.37	$1,671.27	$2,174.64
09-45-25-P4-00200.3501	4 TULIO WAY # 3501FORT	11834 TULIO WAY 3501FORT MYERS, FL 33912	MFA2	$6,060.00	$503.37	$1,671.27	$2,174.64
09-45-25-P4-00200.3502	N M11834 TULIO WAY # 3	11834 TULIO WAY 3502FORT MYERS, FL 33912	MFA2	$6,060.00	$503.37	$1,671.27	$2,174.64
09-45-25-P4-00200.3503	01 NICHOLS ST APT 1CLA	11834 TULIO WAY 3503FORT MYERS, FL 33912	MFA2	$6,060.00	$503.37	$1,671.27	$2,174.64
09-45-25-P4-00200.3504	Y28588 N SKY CREST DR	11834 TULIO WAY 3504FORT MYERS, FL 33912	MFA2	$6,060.00	$503.37	$1,671.27	$2,174.64
09-45-25-P4-00200.3505	11834 TULIO WAY #3505F	11834 TULIO WAY 3505FORT MYERS, FL 33912	MFA2	$6,060.00	$503.37	$1,671.27	$2,174.64
09-45-25-P4-00200.3506	11834 TULIO WAY #3506F	11834 TULIO WAY 3506FORT MYERS, FL 33912	MFA2	$6,060.00	$503.37	$1,671.27	$2,174.64
09-45-25-P4-00200.3601	VEY TODD JOSEPH + JUL	8421 OLINDA WAY 3601FORT MYERS, FL 33912	MFA2	$6,060.00	$503.37	$1,671.27	$2,174.64
09-45-25-P4-00200.3602	21 OLINDA WAY # 3602FO	8421 OLINDA WAY 3602FORT MYERS, FL 33912	MFA2	$6,060.00	$503.37	$1,671.27	$2,174.64
09-45-25-P4-00200.3603	DI K5124 MAPLERIDGE DI	8421 OLINDA WAY 3603FORT MYERS, FL 33912	MFA2	$6,060.00	$503.37	$1,671.27	$2,174.64
09-45-25-P4-00200.3604	75 UNIVERSITY AVE EWA	8421 OLINDA WAY 3604FORT MYERS, FL 33912	MFA2	$6,060.00	$503.37	$1,671.27	$2,174.64
09-45-25-P4-00200.3605	ISON JERILYN MARIE H/	8421 OLINDA WAY 3605FORT MYERS, FL 33912	MFA2	$6,060.00	$503.37	$1,671.27	$2,174.64
09-45-25-P4-00200.3606	LE3195 TOULOUSEBOUR	8421 OLINDA WAY 3606FORT MYERS, FL 33912	MFA2	$6,060.00	$503.37	$1,671.27	$2,174.64
09-45-25-P4-00200.3607	STAL SPO BOX 436SUBLE	8421 OLINDA WAY 3607FORT MYERS, FL 33912	MFA2	$6,060.00	$503.37	$1,671.27	$2,174.64
09-45-25-P4-00200.3608	OLINDA WAY #3608FORT	8421 OLINDA WAY 3608FORT MYERS, FL 33912	MFA2	$6,060.00	$503.37	$1,671.27	$2,174.64
09-45-25-P4-00200.3609	MARGARET H/W116 CLA	8421 OLINDA WAY 3609FORT MYERS, FL 33912	MFA2	$6,060.00	$503.37	$1,671.27	$2,174.64
09-45-25-P4-00200.3610	R8421 OLINDA WAY # 361	8421 OLINDA WAY 3610FORT MYERS, FL 33912	MFA2	$6,060.00	$503.37	$1,671.27	$2,174.64
09-45-25-P4-00200.3701	J + KAREN LPO BOX 626M	8471 OLINDA WAY 3701FORT MYERS, FL 33912	MFA2	$6,060.00	$503.37	$1,671.27	$2,174.64
09-45-25-P4-00200.3702	OLINDA WAY #3702FORT	8471 OLINDA WAY 3702FORT MYERS, FL 33912	MFA2	$6,060.00	$503.37	$1,671.27	$2,174.64
09-45-25-P4-00200.3703	HNSON JOINT REVOCABI	8471 OLINDA WAY 3703FORT MYERS, FL 33912	MFA2	$6,060.00	$503.37	$1,671.27	$2,174.64
09-45-25-P4-00200.3704	RAJAN 18 BUFORD RDR	8471 OLINDA WAY 3704FORT MYERS, FL 33912	MFA2	$6,060.00	$503.37	$1,671.27	$2,174.64
09-45-25-P4-00200.3705	D A J/T8471 OLINDA WAY	8471 OLINDA WAY 3705FORT MYERS, FL 33912	MFA2	$6,060.00	$503.37	$1,671.27	$2,174.64
09-45-25-P4-00200.3706	HELSEA M5394 W LAKE R	8471 OLINDA WAY 3706FORT MYERS, FL 33912	MFA2	$6,060.00	$503.37	$1,671.27	$2,174.64
09-45-25-P4-00200.3707	A16604 CEDAR AVE SROS	8471 OLINDA WAY 3707FORT MYERS, FL 33912	MFA2	$6,060.00	$503.37	$1,671.27	$2,174.64
09-45-25-P4-00200.3708	NE 79 ALEXANDER AVEF	8471 OLINDA WAY 3708FORT MYERS, FL 33912	MFA2	$6,060.00	$503.37	$1,671.27	$2,174.64
09-45-25-P4-00200.3709	DON PL UNIT 1 & 2OTTA	8471 OLINDA WAY 3709FORT MYERS, FL 33912	MFA2	$6,060.00	$503.37	$1,671.27	$2,174.64
09-45-25-P4-00200.3710	8471 OLINDA WAY APT 37	8471 OLINDA WAY 3710FORT MYERS, FL 33912	MFA2	$6,060.00	$503.37	$1,671.27	$2,174.64
09-45-25-P4-00200.3801	LINE A11123 OAK POINTE	11737 ADONCIA WAY 3801FORT MYERS, FL 33912	MFA2	$6,060.00	$503.37	$1,671.27	$2,174.64
09-45-25-P4-00200.3802	E306A EMMANS RDFLAN	11737 ADONCIA WAY 3802FORT MYERS, FL 33912	MFA2	$6,060.00	$503.37	$1,671.27	$2,174.64
09-45-25-P4-00200.3803	DONCIA WAY # 3803FORT	11737 ADONCIA WAY 3803FORT MYERS, FL 33912	MFA2	$6,060.00	$503.37	$1,671.27	$2,174.64
09-45-25-P4-00200.3804	DRA L4955 LAUREL RIDG	11737 ADONCIA WAY 3804FORT MYERS, FL 33912	MFA2	$6,060.00	$503.37	$1,671.27	$2,174.64
09-45-25-P4-00200.3805	A A11737 ADONCIA WAY #	11737 ADONCIA WAY 3805FORT MYERS, FL 33912	MFA2	$6,060.00	$503.37	$1,671.27	$2,174.64
09-45-25-P4-00200.3806	GREAVES AVECOLLINGW	11737 ADONCIA WAY 3806FORT MYERS, FL 33912	MFA2	$6,060.00	$503.37	$1,671.27	$2,174.64
09-45-25-P4-00200.3807	DONCIA WAY # 3807FORT	11737 ADONCIA WAY 3807FORT MYERS, FL 33912	MFA2	$6,060.00	$503.37	$1,671.27	$2,174.64
09-45-25-P4-00200.3808	MAN TRUST11737 ADONC	11737 ADONCIA WAY 3808FORT MYERS, FL 33912	MFA2	$6,060.00	$503.37	$1,671.27	$2,174.64
09-45-25-P4-00200.3809	37 ADONCIA WAY#3809FO	11737 ADONCIA WAY 3809FORT MYERS, FL 33912	MFA2	$6,060.00	$503.37	$1,671.27	$2,174.64
09-45-25-P4-00200.3810	737 ADONCIA WAY #3810	11737 ADONCIA WAY 3810FORT MYERS, FL 33912	MFA2	$6,060.00	$503.37	$1,671.27	$2,174.64
09-45-25-P4-00200.3901	ORAH A11761 ADONCIA	11761 ADONCIA WAY 3901FORT MYERS, FL 33912	MFA2	$6,060.00	$503.37	$1,671.27	$2,174.64
09-45-25-P4-00200.3902	I FAMILY TRUST1401 OW	11761 ADONCIA WAY 3902FORT MYERS, FL 33912	MFA2	$6,060.00	$503.37	$1,671.27	$2,174.64
09-45-25-P4-00200.3903	6406 LONG POINT RDBR	11761 ADONCIA WAY 3903FORT MYERS, FL 33912	MFA2	$6,060.00	$503.37	$1,671.27	$2,174.64
09-45-25-P4-00200.3904	ESLIE15 MARKWOOD CR	11761 ADONCIA WAY 3904FORT MYERS, FL 33912	MFA2	$6,060.00	$503.37	$1,671.27	$2,174.64
09-45-25-P4-00200.3905	H TRUST11761 ADONCIA	11761 ADONCIA WAY 3905FORT MYERS, FL 33912	MFA2	$6,060.00	$503.37	$1,671.27	$2,174.64
09-45-25-P4-00200.3906	ER PATRICIA A H/W117 W	11761 ADONCIA WAY 3906FORT MYERS, FL 33912	MFA2	$6,060.00	$503.37	$1,671.27	$2,174.64
09-45-25-P4-00200.3907	RISTIAN F W/HBANKEVI	11761 ADONCIA WAY 3907FORT MYERS, FL 33912	MFA2	$6,060.00	$503.37	$1,671.27	$2,174.64
09-45-25-P4-00200.3908	MISSISSAUGA RDMISSIS	11761 ADONCIA WAY 3908FORT MYERS, FL 33912	MFA2	$6,060.00	$503.37	$1,671.27	$2,174.64
09-45-25-P4-00200.3909	YL L6172 APACHE WAYG	11761 ADONCIA WAY 3909FORT MYERS, FL 33912	MFA2	$6,060.00	$503.37	$1,671.27	$2,174.64
09-45-25-P4-00200.3910	A14280 W SHERYL LYNN	11761 ADONCIA WAY 3910FORT MYERS, FL 33912	MFA2	$6,060.00	$503.37	$1,671.27	$2,174.64

PASEO COMMUNITY DEVELOPMENT DISTRICT
2019 ASSESSMENT LIEN ROLL

STRAP	Owner	Site Address	LU	SERIES 2018 REMAINING PRINCIPAL (1)	SERIES 2018 DEBT SERVICE	O&M	TOTAL
10-45-25-P4-0010C.1100	INC12750 CITRUS PARK L	SUBMERGEDFORT MYERS, FL	0	$0.00	$0.00	$0.00	$0.00
10-45-25-P4-0010D.0030	INC12750 CITRUS PARK L	PASEO C/EFORT MYERS, FL	0	$0.00	$0.00	$0.00	$0.00
			NET COLLECTIONS	**$9,249,816.00**	**$773,671.77**	**$1,886,655.69**	**$2,660,327.46**

(1) For informational purposes only. Please contact the District Manager for a formal payoff.

Uniform Method

PASEO COMMUNITY DEVELOPMENT DISTRICT
2019 ASSESSMENT LIEN ROLL (UNIFORM METHOD)

STRAP	Owner	Site Address	LU	SERIES 2018 DEBT SERVICE	O&M	TOTAL
09-45-25-00-00002.0010	LEE COUNTYPO BOX 398FORT MYERS FL, 33902	8001 PENZANCE BLVDFORT MYERS, FL 33912	0	$0.00	$0.00	$0.00
09-45-25-P2-0010D.0020	PASEO CDDRIZZETTA & COMPANY INC12750 CIT	PASEO C/EFORT MYERS, FL	0	$0.00	$0.00	$0.00
09-45-25-P2-00200.0010	REYNOLDS DAVID J + JODENE M311 DEVON CTC	8304 ADELIO LNFORT MYERS, FL 33912	SFA2	$1,048.67	$1,667.26	$2,715.93
09-45-25-P2-00200.0020	MYERS GARY E +SANTORO RENATA H/W3550 WI	8306 ADELIO LNFORT MYERS, FL 33912	SFA2	$1,048.67	$1,667.26	$2,715.93
09-45-25-P2-00200.0030	BUECHLEIN MICHAEL M + DIANE K8308 ADELIO	8308 ADELIO LNFORT MYERS, FL 33912	SFA2	$1,048.67	$1,667.26	$2,715.93
09-45-25-P2-00200.0040	SMITH MICHAEL C + JOAN K8310 ADELIO LNFOR	8310 ADELIO LNFORT MYERS, FL 33912	SFA2	$1,048.67	$1,667.26	$2,715.93
09-45-25-P2-00200.0050	LINES JOHN C + LINDA J8312 ADELIO LNFORT M	8312 ADELIO LNFORT MYERS, FL 33912	SFA2	$1,048.67	$1,667.26	$2,715.93
09-45-25-P2-00200.0060	BELL LINDLEY REED SMITH TRFOR LSB FAMILY	8314 ADELIO LNFORT MYERS, FL 33912	SFA2	$1,048.67	$1,667.26	$2,715.93
09-45-25-P2-00200.0070	RIPLEY KENNETH W + LINDA K8316 ADELIO LNF	8316 ADELIO LNFORT MYERS, FL 33912	SFA2	$1,048.67	$1,667.26	$2,715.93
09-45-25-P2-00200.0080	SPOTTS STEVEN D + JOY R8318 ADELIO LNFORT	8318 ADELIO LNFORT MYERS, FL 33912	SFA2	$1,048.67	$1,667.26	$2,715.93
09-45-25-P2-00200.0090	KLOZA THOMAS & DIANA8320 ADELIO LNFORT	8320 ADELIO LNFORT MYERS, FL 33912	SFA2	$1,048.67	$1,667.26	$2,715.93
09-45-25-P2-00200.0100	DONALD A YOUNG REVOCABLE TRUSTSHERYL	8322 ADELIO LNFORT MYERS, FL 33912	SFA2	$1,048.67	$1,667.26	$2,715.93
09-45-25-P2-00200.0110	PALAIA KATHLEEN TRFOR KATHLEEN NIXON PA	8324 ADELIO LNFORT MYERS, FL 33912	SFA2	$1,048.67	$1,667.26	$2,715.93
09-45-25-P2-00200.0120	WATZ WARD E TRFOR WARD E WATZ TRUST3519	8326 ADELIO LNFORT MYERS, FL 33912	SFA2	$1,048.67	$1,667.26	$2,715.93
09-45-25-P2-00200.0130	SMITH RANDALL L + MARLA J8328 ADELIO LNFC	8328 ADELIO LNFORT MYERS, FL 33912	SFA2	$1,048.67	$1,667.26	$2,715.93
09-45-25-P2-00200.0140	MARCELLA NICKOLAS RICHARD +MARCELLA S	8330 ADELIO LNFORT MYERS, FL 33912	SFA2	$1,048.67	$1,667.26	$2,715.93
09-45-25-P2-00200.0150	SIMESON ALASTAIR H TRFOR SIMESON FAMILY	8332 ADELIO LNFORT MYERS, FL 33912	SFA2	$1,048.67	$1,667.26	$2,715.93
09-45-25-P2-00200.0160	WALD SHELLY ZIMMER + GOSTOMSKI BEVERLY	8334 ADELIO LNFORT MYERS, FL 33912	SFA2	$1,048.67	$1,667.26	$2,715.93
09-45-25-P2-00200.0170	HEIMBECKER STEPHEN L & HEIMBECKER JOAN	8336 ADELIO LNFORT MYERS, FL 33912	SFA2	$1,048.67	$1,667.26	$2,715.93
09-45-25-P2-00200.0180	DECRISTOFANO GIUSEPPE MARIO +DECRISTOF	8338 ADELIO LNFORT MYERS, FL 33912	SFA2	$1,048.67	$1,667.26	$2,715.93
09-45-25-P2-00200.0190	SZUMINSKI MICHAEL + JULIE L/E8340 ADELIO L	8340 ADELIO LNFORT MYERS, FL 33912	SFA2	$1,048.67	$1,667.26	$2,715.93
09-45-25-P2-00200.0200	SEIFERT KAREN TRFOR KAREN SEIFERT TRUST	8339 ADELIO LNFORT MYERS, FL 33912	SFA2	$1,048.67	$1,667.26	$2,715.93
09-45-25-P2-00200.0210	FRISCHLING GREGG +CHELLEL AMY H/W324 BR	8337 ADELIO LNFORT MYERS, FL 33912	SFA2	$1,048.67	$1,667.26	$2,715.93
09-45-25-P2-00200.0220	DOLL GEORGE E 219 ADAM SMITH ST STE AELD	8335 ADELIO LNFORT MYERS, FL 33912	SFA2	$1,048.67	$1,667.26	$2,715.93
09-45-25-P2-00200.0230	MAHR DOUGLAS J + KIMBERLY F416 CHURCHIL	8333 ADELIO LNFORT MYERS, FL 33912	SFA2	$1,048.67	$1,667.26	$2,715.93
09-45-25-P2-00200.0240	GOSS ARTHUR B + SHARI D8331 ADELIO LNFORT	8331 ADELIO LNFORT MYERS, FL 33912	SFA2	$1,048.67	$1,667.26	$2,715.93
09-45-25-P2-00200.0250	DAMICO ROSARIO +DAMICO MARIA J/T8329 AD	8329 ADELIO LNFORT MYERS, FL 33912	SFA2	$1,048.67	$1,667.26	$2,715.93
09-45-25-P2-00200.0260	ROBERTS EQUITY PARTNERS LLCGENE + DEBBI	8327 ADELIO LNFORT MYERS, FL 33912	SFA2	$1,048.67	$1,667.26	$2,715.93
09-45-25-P2-00200.0270	NEGLEY CHARLES R & NEGLEY CARROLL S8325	8325 ADELIO LNFORT MYERS, FL 33912	SFA2	$1,048.67	$1,667.26	$2,715.93
09-45-25-P2-00200.0280	CAMPISI FRANK M + ANNE T8323 ADELIO LNFOR	8323 ADELIO LNFORT MYERS, FL 33912	SFA2	$1,048.67	$1,667.26	$2,715.93
09-45-25-P2-00200.0290	GUYKER CHARLES L + MARIA E8321 ADELIO LN	8321 ADELIO LNFORT MYERS, FL 33912	SFA2	$1,048.67	$1,667.26	$2,715.93
09-45-25-P2-00200.0300	MACEY JEFFREY MORGAN TR +MACEY LAURA	8319 ADELIO LNFORT MYERS, FL 33912	SFA2	$1,048.67	$1,667.26	$2,715.93
09-45-25-P2-00200.0310	JASZEWSKI JAN R + BEATA8317 ADELIO LNFORT	8317 ADELIO LNFORT MYERS, FL 33912	SFA2	$1,048.67	$1,667.26	$2,715.93
09-45-25-P2-00200.0320	JAGGERS DAVID F TR +JAGGERS JONET A TRFOR	8315 ADELIO LNFORT MYERS, FL 33912	SFA2	$1,048.67	$1,667.26	$2,715.93
09-45-25-P2-00200.0330	LEMMO SALVATOR + CATERINA772 MCMANUS A	8313 ADELIO LNFORT MYERS, FL 33912	SFA2	$1,048.67	$1,667.26	$2,715.93
09-45-25-P2-00200.0340	RIZZO FRANCIS J + LINDA S8311 ADELIO LNFOR	8311 ADELIO LNFORT MYERS, FL 33912	SFA2	$1,048.67	$1,667.26	$2,715.93
09-45-25-P2-00200.0350	VICK KYLE A III + JANET M230 WICKLAWN WAY	8309 ADELIO LNFORT MYERS, FL 33912	SFA2	$1,048.67	$1,667.26	$2,715.93
09-45-25-P2-00200.0360	GAARDER TIMOTHY D +GAARDER JULIA A J/T62	8307 ADELIO LNFORT MYERS, FL 33912	SFA2	$1,048.67	$1,667.26	$2,715.93
09-45-25-P2-00200.0370	JAMES MICHAEL A & A BETH TRFOR MICHAEL A	8305 ADELIO LNFORT MYERS, FL 33912	SFA2	$1,048.67	$1,667.26	$2,715.93
09-45-25-P2-00200.0380	PAPPA FRANCIS R + SUSAN M8364 DARIO WAYF	8364 DARIO WAYFORT MYERS, FL 33912	SFA2	$1,048.67	$1,667.26	$2,715.93
09-45-25-P2-00200.0390	HARPER GREGORY L + JANEL S8366 DARIO WAY	8366 DARIO WAYFORT MYERS, FL 33912	SFA2	$1,048.67	$1,667.26	$2,715.93
09-45-25-P2-00200.0400	GRAETTINGER RALPH A + MARION K8368 DARI	8368 DARIO WAYFORT MYERS, FL 33912	SFA2	$1,048.67	$1,667.26	$2,715.93
09-45-25-P2-00200.0410	MCCLEAVEY JAMES R TRFOR JAMES MCCLEAV	8370 DARIO WAYFORT MYERS, FL 33912	SFA2	$1,048.67	$1,667.26	$2,715.93
09-45-25-P2-00200.0420	LEAHY ROBERT D + ELIZABETH ANN8372 DARI	8372 DARIO WAYFORT MYERS, FL 33912	SFA2	$1,048.67	$1,667.26	$2,715.93
09-45-25-P2-00200.0430	BOHBRINK MARSHALL + LESLIE8374 DARIO WA	8374 DARIO WAYFORT MYERS, FL 33912	SFA2	$1,048.67	$1,667.26	$2,715.93
09-45-25-P2-00200.0440	KEATON ROGERRMK ENTERPRISESP O BOX 104	8376 DARIO WAYFORT MYERS, FL 33912	SFA2	$1,048.67	$1,667.26	$2,715.93
09-45-25-P2-00200.0450	MAHESHWARI VEENA +MAHESHWARI MAHEND	8378 DARIO WAYFORT MYERS, FL 33912	SFA2	$1,048.67	$1,667.26	$2,715.93
09-45-25-P2-00200.0460	SCHMIDT DANIEL R & SCHMIDT ZENAIDA H8380	8380 DARIO WAYFORT MYERS, FL 33912	SFA2	$1,048.67	$1,667.26	$2,715.93
09-45-25-P2-00200.0470	CONWAY MICHAEL M + CHARLENE A8382 DARI	8382 DARIO WAYFORT MYERS, FL 33912	SFA2	$1,048.67	$1,667.26	$2,715.93
09-45-25-P2-00200.0480	RONGO NOEL P + MELU-JEAN P5730 SEA TROUT	8384 DARIO WAYFORT MYERS, FL 33912	SFA2	$1,048.67	$1,667.26	$2,715.93
09-45-25-P2-00200.0490	KOVACH CRAIG & RUTH A SAUCE8383 DARIO W	8383 DARIO WAYFORT MYERS, FL 33912	SFA2	$1,048.67	$1,667.26	$2,715.93
09-45-25-P2-00200.0500	NICCUM DONALD G & DECKER-NICCUM STEFA	8381 DARIO WAYFORT MYERS, FL 33912	SFA2	$1,048.67	$1,667.26	$2,715.93
09-45-25-P2-00200.0510	BUCHINSKI MICHAEL + PATRICIA I8379 DARIO W	8379 DARIO WAYFORT MYERS, FL 33912	SFA2	$1,048.67	$1,667.26	$2,715.93
09-45-25-P2-00200.0520	ANDREAS DAVID SCOTTPO BOX 62334FORT MY	11202 ADORA CTFORT MYERS, FL 33912	SFA2	$1,048.67	$1,667.26	$2,715.93

PASEO COMMUNITY DEVELOPMENT DISTRICT
2019 ASSESSMENT LIEN ROLL (UNIFORM METHOD)

STRAP	Owner	Site Address	LU	SERIES 2018 DEBT SERVICE	O&M	TOTAL
09-45-25-P2-00200.0530	MARTINO ANTONIO & NICOLE352 HARRISON AV	11204 ADORA CTFORT MYERS, FL 33912	SFA2	$1,048.67	$1,667.26	$2,715.93
09-45-25-P2-00200.0540	OCUTO JAMIE11206 ADORA CTFORT MYERS FL,	11206 ADORA CTFORT MYERS, FL 33912	SFA2	$1,048.67	$1,667.26	$2,715.93
09-45-25-P2-00200.0550	ODONNELL THOMAS D +METCALF ROSALIND J/	11208 ADORA CTFORT MYERS, FL 33912	SFA2	$1,048.67	$1,667.26	$2,715.93
09-45-25-P2-00200.0560	SIMESON ALASTAIR H TRFOR SIMESON FAMILY	11211 ADORA CTFORT MYERS, FL 33912	SFA2	$1,048.67	$1,667.26	$2,715.93
09-45-25-P2-00200.0570	SASSER RYAN N11209 ADORA CTFORT MYERS F	11209 ADORA CTFORT MYERS, FL 33912	SFA2	$1,048.67	$1,667.26	$2,715.93
09-45-25-P2-00200.0580	PERRY FELIX A SR11207 ADORA CTFORT MYERS	11207 ADORA CTFORT MYERS, FL 33912	SFA2	$1,048.67	$1,667.26	$2,715.93
09-45-25-P2-00200.0590	JOHNSON GREGORY S + GINGER M11205 ADORA	11205 ADORA CTFORT MYERS, FL 33912	SFA2	$1,048.67	$1,667.26	$2,715.93
09-45-25-P2-00200.0600	CABELL DAVID W TR +CABELL CLAUDIA Y TRFO	11203 ADORA CTFORT MYERS, FL 33912	SFA2	$1,048.67	$1,667.26	$2,715.93
09-45-25-P2-00200.0610	FLOODY BERNARD J 11062 ESTEBAN DRFORT M	11062 ESTEBAN DRFORT MYERS, FL 33912	VILLA2	$1,048.67	$1,667.26	$2,715.93
09-45-25-P2-00200.0620	VINSON THOMAS G + BARBARA W TRFOR VINSO	11064 ESTEBAN DRFORT MYERS, FL 33912	VILLA2	$1,048.67	$1,667.26	$2,715.93
09-45-25-P2-00200.0630	BELMONT VIRGINIA G + LEONARDI JOANNE B11	11066 ESTEBAN DRFORT MYERS, FL 33912	VILLA2	$1,048.67	$1,667.26	$2,715.93
09-45-25-P2-00200.0640	GORASSO WALTER +GORASSO TRACEY +GORAS	11068 ESTEBAN DRFORT MYERS, FL 33912	VILLA2	$1,048.67	$1,667.26	$2,715.93
09-45-25-P2-00200.0650	SOLTANI SHAHROKH TRFOR SOLTANI DISCRETIO	11070 ESTEBAN DRFORT MYERS, FL 33912	VILLA2	$1,048.67	$1,667.26	$2,715.93
09-45-25-P2-00200.0660	MCCOY BRIAN + RENEE 15606 HIDDEN OAKS CT	11072 ESTEBAN DRFORT MYERS, FL 33912	VILLA2	$1,048.67	$1,667.26	$2,715.93
09-45-25-P2-00200.0670	GLOWACKI HENRY + MARILYN ANNE 117 PAXTO	11074 ESTEBAN DRFORT MYERS, FL 33912	VILLA2	$1,048.67	$1,667.26	$2,715.93
09-45-25-P2-00200.0680	BAGDASARIAN VAHAN & NATASHA640 GEDDES	11076 ESTEBAN DRFORT MYERS, FL 33912	VILLA2	$1,048.67	$1,667.26	$2,715.93
09-45-25-P2-00200.0690	SKYBERG JASON L TRFOR JASON L SKYBERG TI	11078 ESTEBAN DRFORT MYERS, FL 33912	VILLA2	$1,048.67	$1,667.26	$2,715.93
09-45-25-P2-00200.0700	WIENECKE ERNST A +WIENECKE DAINA J/T1524	11080 ESTEBAN DRFORT MYERS, FL 33912	VILLA2	$1,048.67	$1,667.26	$2,715.93
09-45-25-P2-00200.0710	DIXON JIM + MARILYN76 ROMANY RANCH RDC	11082 ESTEBAN DRFORT MYERS, FL 33912	VILLA2	$1,048.67	$1,667.26	$2,715.93
09-45-25-P2-00200.0720	JONAS STEPHEN P & CHERYL A TRFOR STEPHEN	11084 ESTEBAN DRFORT MYERS, FL 33912	VILLA2	$1,048.67	$1,667.26	$2,715.93
09-45-25-P2-00200.0730	MAUCK WALTER & SUSAN11086 ESTEBAN DRFO	11086 ESTEBAN DRFORT MYERS, FL 33912	VILLA2	$1,048.67	$1,667.26	$2,715.93
09-45-25-P2-00200.0740	LOFTUS RANDALL J +LOFTUS TAMORA L J/T21 W	11088 ESTEBAN DRFORT MYERS, FL 33912	VILLA2	$1,048.67	$1,667.26	$2,715.93
09-45-25-P2-00200.0750	BODINE DANIEL T TR +EBERHARDT-BODINE SA	11090 ESTEBAN DRFORT MYERS, FL 33912	VILLA2	$1,048.67	$1,667.26	$2,715.93
09-45-25-P2-00200.0760	MORRISON MICHAEL + KARA20928 TORRE DEL	11092 ESTEBAN DRFORT MYERS, FL 33912	VILLA2	$1,048.67	$1,667.26	$2,715.93
09-45-25-P2-00200.0770	FALVO VINCENT JR TR +FALVO JEAN M TRDOR	11094 ESTEBAN DRFORT MYERS, FL 33912	VILLA2	$1,048.67	$1,667.26	$2,715.93
09-45-25-P2-00200.0780	MALAK FAWAZ & CARRIE SOULES11096 ESTEBA	11096 ESTEBAN DRFORT MYERS, FL 33912	VILLA2	$1,048.67	$1,667.26	$2,715.93
09-45-25-P2-00200.0790	ZUCCHETTO MARK + CATHERINE1723 KAVANAG	11098 ESTEBAN DRFORT MYERS, FL 33912	VILLA2	$1,048.67	$1,667.26	$2,715.93
09-45-25-P2-00200.0800	BLACKWELL JAMES L TR +BLACKWELL LINDA L	11100 ESTEBAN DRFORT MYERS, FL 33912	VILLA2	$1,048.67	$1,667.26	$2,715.93
09-45-25-P2-00200.0810	JACOBS MARY DALEY11102 ESTEBAN DRFORT M	11102 ESTEBAN DRFORT MYERS, FL 33912	VILLA2	$1,048.67	$1,667.26	$2,715.93
09-45-25-P2-00200.0820	SHEIPLINE DANNY + KELLI11104 ESTEBAN DRFO	11104 ESTEBAN DRFORT MYERS, FL 33912	VILLA2	$1,048.67	$1,667.26	$2,715.93
09-45-25-P2-00200.0830	HARTING DAVID CHARLES TR +SLOSAR SHARO	11106 ESTEBAN DRFORT MYERS, FL 33912	VILLA2	$1,048.67	$1,667.26	$2,715.93
09-45-25-P2-00200.0840	PARKES EDWARD + PARKES CHRISTINE J/T175 G	11108 ESTEBAN DRFORT MYERS, FL 33912	VILLA2	$1,048.67	$1,667.26	$2,715.93
09-45-25-P2-00200.0850	TORRENT DANTE S + DONNA M11110 ESTEBAN	11110 ESTEBAN DRFORT MYERS, FL 33912	VILLA2	$1,048.67	$1,667.26	$2,715.93
09-45-25-P2-00200.0860	LEONARD HARRY A11112 ESTEBAN DRFORT MY	11112 ESTEBAN DRFORT MYERS, FL 33912	VILLA2	$1,048.67	$1,667.26	$2,715.93
09-45-25-P2-00200.0870	TRUCKSESS JAMES J + MAUREEN E11116 ESTEB	11114 ESTEBAN DRFORT MYERS, FL 33912	VILLA2	$1,048.67	$1,667.26	$2,715.93
09-45-25-P2-00200.0880	TRUCKSESS JAMES J + MAUREEN E11116 ESTEB	11116 ESTEBAN DRFORT MYERS, FL 33912	VILLA2	$1,048.67	$1,667.26	$2,715.93
09-45-25-P2-00200.0890	DONEHOO THOMAS11118 ESTEBAN DRFORT MY	11118 ESTEBAN DRFORT MYERS, FL 33912	VILLA2	$1,048.67	$1,667.26	$2,715.93
09-45-25-P2-00200.0900	LAWRENCE HEATHER S TRFOR HUMPHREY FAM	11120 ESTEBAN DRFORT MYERS, FL 33912	VILLA2	$1,048.67	$1,667.26	$2,715.93
09-45-25-P2-00200.0910	KUZUB LINDA MARION + TERENCE5193 CEDAR	11122 ESTEBAN DRFORT MYERS, FL 33912	VILLA2	$1,048.67	$1,667.26	$2,715.93
09-45-25-P2-00200.0920	CARR MICHAEL + LAUREEN11124 ESTEBAN DRF	11124 ESTEBAN DRFORT MYERS, FL 33912	VILLA2	$1,048.67	$1,667.26	$2,715.93
09-45-25-P2-00200.0930	RACILA RAYMOND L +RACILA LILI E11126 ESTE	11126 ESTEBAN DRFORT MYERS, FL 33912	VILLA2	$1,048.67	$1,667.26	$2,715.93
09-45-25-P2-00200.0940	HACKWORTH DENNIS J + JACKIE L11128 ESTEBA	11128 ESTEBAN DRFORT MYERS, FL 33912	VILLA2	$1,048.67	$1,667.26	$2,715.93
09-45-25-P2-00200.0950	LEMAY GLENDA A3028 SUMMERVALE DRHOLID	11130 ESTEBAN DRFORT MYERS, FL 33912	VILLA2	$1,048.67	$1,667.26	$2,715.93
09-45-25-P2-00200.0960	FRANGIONE MARIO + IVANA10 NANCY STOTTAV	11132 ESTEBAN DRFORT MYERS, FL 33912	VILLA2	$1,048.67	$1,667.26	$2,715.93
09-45-25-P2-00200.0970	STECKER LISA R TRFOR LISA R STECKER LIVING	11134 ESTEBAN DRFORT MYERS, FL 33912	VILLA2	$1,048.67	$1,667.26	$2,715.93
09-45-25-P2-00200.0980	GIANNETTI MARIO + CECILLA16 JEREMIAH PLO	11136 ESTEBAN DRFORT MYERS, FL 33912	VILLA2	$1,048.67	$1,667.26	$2,715.93
09-45-25-P2-00200.0990	STEYER DONALD J11138 ESTEBAN DRFORT MYE	11138 ESTEBAN DRFORT MYERS, FL 33912	VILLA2	$1,048.67	$1,667.26	$2,715.93
09-45-25-P2-00200.1000	BOLGER COLLEEN + GIBSON JANE AGNES11140	11140 ESTEBAN DRFORT MYERS, FL 33912	VILLA2	$1,048.67	$1,667.26	$2,715.93
09-45-25-P2-00200.1010	BORON ARNOLD + BORON LISA633 PRESTWICK	11141 ESTEBAN DRFORT MYERS, FL 33912	VILLA2	$1,048.67	$1,667.26	$2,715.93
09-45-25-P2-00200.1020	FRITZ MARK STEVEN + FRITZ BERNICE JUNE111	11139 ESTEBAN DRFORT MYERS, FL 33912	VILLA2	$1,048.67	$1,667.26	$2,715.93
09-45-25-P2-00200.1030	MCANDREW JASON J + HEIDI Z189 UPPER MOUN	11137 ESTEBAN DRFORT MYERS, FL 33912	VILLA2	$1,048.67	$1,667.26	$2,715.93
09-45-25-P2-00200.1040	JAKARAS INVESTMENTS LLC21911 WATDER OA	11135 ESTEBAN DRFORT MYERS, FL 33912	VILLA2	$1,048.67	$1,667.26	$2,715.93
09-45-25-P2-00200.1050	HABNER JUERGEN +LOEWNAU-HABNER ANGEL	11133 ESTEBAN DRFORT MYERS, FL 33912	VILLA2	$1,048.67	$1,667.26	$2,715.93
09-45-25-P2-00200.1060	GILLESPIE AMY TR +LIEBS-BENKE RENE TR +JO	11131 ESTEBAN DRFORT MYERS, FL 33912	VILLA2	$1,048.67	$1,667.26	$2,715.93

PASEO COMMUNITY DEVELOPMENT DISTRICT
2019 ASSESSMENT LIEN ROLL (UNIFORM METHOD)

STRAP	Owner	Site Address	LU	SERIES 2018 DEBT SERVICE	O&M	TOTAL
09-45-25-P2-00200.1070	CALABRO STEPHEN C + LISA MPO BOX 143MIRR	11129 ESTEBAN DRFORT MYERS, FL 33912	VILLA2	$1,048.67	$1,667.26	$2,715.93
09-45-25-P2-00200.1080	GIANNETTI SANDRO + CECILIA34 FIFESHIRE CR	11127 ESTEBAN DRFORT MYERS, FL 33912	VILLA2	$1,048.67	$1,667.26	$2,715.93
09-45-25-P2-00200.1090	PHILLIPS ARTHUR W TR + PHILLIPS JOANNE B TI	11125 ESTEBAN DRFORT MYERS, FL 33912	VILLA2	$1,048.67	$1,667.26	$2,715.93
09-45-25-P2-00200.1100	MCCARDEL KEITH +PENDRAY LEEANN J/T5100 A	11123 ESTEBAN DRFORT MYERS, FL 33912	VILLA2	$1,048.67	$1,667.26	$2,715.93
09-45-25-P2-00200.1110	ROBERTS MELINDA M TRFOR RALPH V ROBERT	11121 ESTEBAN DRFORT MYERS, FL 33912	VILLA2	$1,048.67	$1,667.26	$2,715.93
09-45-25-P2-00200.1120	ROBERTS MELINDA M TRFOR RALPH V ROBERT	11119 ESTEBAN DRFORT MYERS, FL 33912	VILLA2	$1,048.67	$1,667.26	$2,715.93
09-45-25-P2-00200.1130	MCGUFFEY JANET26 STONEHAVEN DRNORTH B	11117 ESTEBAN DRFORT MYERS, FL 33912	VILLA2	$1,048.67	$1,667.26	$2,715.93
09-45-25-P2-00200.1140	XENIAS STEPHEN J + KATHLEEN M25 OLD WEST	11115 ESTEBAN DRFORT MYERS, FL 33912	VILLA2	$1,048.67	$1,667.26	$2,715.93
09-45-25-P2-00200.1150	MCBRIERTY THOMAS + JENNIFER 11113 ESTEBA	11113 ESTEBAN DRFORT MYERS, FL 33912	VILLA2	$1,048.67	$1,667.26	$2,715.93
09-45-25-P2-00200.1160	CICCHINO JOHN + NICOLINA G +CICCHINO MAR	11111 ESTEBAN DRFORT MYERS, FL 33912	VILLA2	$1,048.67	$1,667.26	$2,715.93
09-45-25-P2-00200.1170	KEATING WILLIAM J JR TRFOR BRIAN K BOURGI	11109 ESTEBAN DRFORT MYERS, FL 33912	VILLA2	$1,048.67	$1,667.26	$2,715.93
09-45-25-P2-00200.1180	LAETHEM LYNN TRFOR LYNN LAETHEM TRUST	11107 ESTEBAN DRFORT MYERS, FL 33912	VILLA2	$1,048.67	$1,667.26	$2,715.93
09-45-25-P2-00200.1190	PATALSKY JAMES E + DONNA C11105 ESTEBAN I	11105 ESTEBAN DRFORT MYERS, FL 33912	VILLA2	$1,048.67	$1,667.26	$2,715.93
09-45-25-P2-00200.1200	KRAMER KENNETH I + DONNA D11103 ESTEBAN	11103 ESTEBAN DRFORT MYERS, FL 33912	VILLA2	$1,048.67	$1,667.26	$2,715.93
09-45-25-P2-00200.1210	SMITH JANE E11091 ESTEBAN DRFORT MYERS F	11101 ESTEBAN DRFORT MYERS, FL 33912	VILLA2	$1,048.67	$1,667.26	$2,715.93
09-45-25-P2-00200.1220	SMITH JANE E11091 ESTEBAN DRFORT MYERS F	11091 ESTEBAN DRFORT MYERS, FL 33912	VILLA2	$1,048.67	$1,667.26	$2,715.93
09-45-25-P2-00200.1230	ST JOHN RANDY C 11089 ESTEBAN DRFORT MYI	11089 ESTEBAN DRFORT MYERS, FL 33912	VILLA2	$1,048.67	$1,667.26	$2,715.93
09-45-25-P2-00200.1240	REUTER THOMAS W + REUTER ROSANN J/T314 I	11087 ESTEBAN DRFORT MYERS, FL 33912	VILLA2	$1,048.67	$1,667.26	$2,715.93
09-45-25-P2-00200.1250	MANSOURI-DANA FATEMEH +GHOLIZADEH MEI	11085 ESTEBAN DRFORT MYERS, FL 33912	VILLA2	$1,048.67	$1,667.26	$2,715.93
09-45-25-P2-00200.1260	LESKO JAMES E + KIMBERLY A7312 STOCKWOO	11083 ESTEBAN DRFORT MYERS, FL 33912	VILLA2	$1,048.67	$1,667.26	$2,715.93
09-45-25-P2-00200.1270	NICHOLS RAYMOND C JR & NICHOLS NANCY R	11081 ESTEBAN DRFORT MYERS, FL 33912	VILLA2	$1,048.67	$1,667.26	$2,715.93
09-45-25-P2-00200.1280	ROSS GEORGE A & KAREN S9 HICKORY DRMOR	11079 ESTEBAN DRFORT MYERS, FL 33912	VILLA2	$1,048.67	$1,667.26	$2,715.93
09-45-25-P2-00200.1290	TROY ALEXANDER + DALE W4 MIDDLEBROOK I	11077 ESTEBAN DRFORT MYERS, FL 33912	VILLA2	$1,048.67	$1,667.26	$2,715.93
09-45-25-P2-00200.1300	NICHOLLS JAMES + GERALDINE5596 EVENTING	11075 ESTEBAN DRFORT MYERS, FL 33912	VILLA2	$1,048.67	$1,667.26	$2,715.93
09-45-25-P2-00200.1310	FILINGERI VITO +FILINGERI MARILYN M J/T1107	11073 ESTEBAN DRFORT MYERS, FL 33912	VILLA2	$1,048.67	$1,667.26	$2,715.93
09-45-25-P2-00200.1320	ZUCCO JOHN A + ZUCCO LOUISE B J/T11071 EST	11071 ESTEBAN DRFORT MYERS, FL 33912	VILLA2	$1,048.67	$1,667.26	$2,715.93
09-45-25-P2-00200.1330	ANDERSON CHARLES J TRFOR CHARLES J ANDE	11069 ESTEBAN DRFORT MYERS, FL 33912	VILLA2	$1,048.67	$1,667.26	$2,715.93
09-45-25-P2-00200.1340	GAMMON KENT E & ROBERTA H11067 ESTEBAN	11067 ESTEBAN DRFORT MYERS, FL 33912	VILLA2	$1,048.67	$1,667.26	$2,715.93
09-45-25-P2-00200.1350	CURRAN RICHARD J & BRENDA H TRFOR BRENI	11065 ESTEBAN DRFORT MYERS, FL 33912	VILLA2	$1,048.67	$1,667.26	$2,715.93
09-45-25-P2-00200.1360	UNRUH DANIEL M TR FOR UNRUH FAMILY TRUS	11063 ESTEBAN DRFORT MYERS, FL 33912	VILLA2	$1,048.67	$1,667.26	$2,715.93
09-45-25-P2-0020A.0000	PASEO CDDRIZZETTA & COMPANY INC12750 CIT	RIGHT OF WAYFORT MYERS, FL	0	$0.00	$0.00	$0.00
09-45-25-P2-0020C.0010	PASEO CDDRIZZETTA & COMPANY INC12750 CIT	ESPERANZA @ PASEO C/EFORT MYERS, FL	0	$0.00	$0.00	$0.00
09-45-25-P2-0020C.0020	PASEO CDDRIZZETTA & COMPANY INC12750 CIT	ESPERANZA @ PASEO C/EFORT MYERS, FL	0	$0.00	$0.00	$0.00
09-45-25-P2-0020C.0030	PASEO CDDRIZZETTA & COMPANY INC12750 CIT	ESPERANZA @ PASEO C/EFORT MYERS, FL	0	$0.00	$0.00	$0.00
09-45-25-P2-0020C.0040	PASEO CDDRIZZETTA & COMPANY INC12750 CIT	ESPERANZA @ PASEO C/EFORT MYERS, FL	0	$0.00	$0.00	$0.00
09-45-25-P2-0020C.0050	PASEO CDDRIZZETTA & COMPANY INC12750 CIT	ESPERANZA @ PASEO C/EFORT MYERS, FL	0	$0.00	$0.00	$0.00
09-45-25-P2-0020C.0060	PASEO CDDRIZZETTA & COMPANY INC12750 CIT	ESPERANZA @ PASEO C/EFORT MYERS, FL	0	$0.00	$0.00	$0.00
09-45-25-P2-0020C.0070	PASEO CDDRIZZETTA & COMPANY INC12750 CIT	ESPERANZA @ PASEO C/EFORT MYERS, FL	0	$0.00	$0.00	$0.00
09-45-25-P2-0020C.0080	PASEO CDDRIZZETTA & COMPANY INC12750 CIT	ESPERANZA @ PASEO C/EFORT MYERS, FL	0	$0.00	$0.00	$0.00
09-45-25-P2-002B1.0000	PASEO CDDRIZZETTA & COMPANY INC12750 CIT	SUBMERGEDFORT MYERS, FL	0	$0.00	$0.00	$0.00
09-45-25-P2-002B2.0000	PASEO CDDRIZZETTA & COMPANY INC12750 CIT	SUBMERGEDFORT MYERS, FL	0	$0.00	$0.00	$0.00
09-45-25-P2-002B3.0000	PASEO CDDRIZZETTA & COMPANY INC12750 CIT	SUBMERGEDFORT MYERS, FL	0	$0.00	$0.00	$0.00
09-45-25-P2-002B4.0000	PASEO CDDRIZZETTA & COMPANY INC12750 CIT	SUBMERGEDFORT MYERS, FL	0	$0.00	$0.00	$0.00
09-45-25-P2-002B5.0000	PASEO CDDRIZZETTA & COMPANY INC12750 CIT	SUBMERGEDFORT MYERS, FL	0	$0.00	$0.00	$0.00
09-45-25-P2-002B6.0000	PASEO CDDRIZZETTA & COMPANY INC12750 CIT	SUBMERGEDFORT MYERS, FL	0	$0.00	$0.00	$0.00
09-45-25-P2-00300.1370	JOLLOFF TIMOTHY C & WEIL LISA A11300 HIDAL	11300 HIDALGO CTFORT MYERS, FL 33912	SFA2	$1,048.67	$1,667.26	$2,715.93
09-45-25-P2-00300.1380	NAPOLITANO DINO S & NAPOLITANO BENITA M	11304 HIDALGO CTFORT MYERS, FL 33912	SFA2	$1,048.67	$1,667.26	$2,715.93
09-45-25-P2-00300.1390	VARCAK THOMAS J + DEBRA M2250 EVERGREE	11306 HIDALGO CTFORT MYERS, FL 33912	SFA2	$1,048.67	$1,667.26	$2,715.93
09-45-25-P2-00300.1400	GOOSSENS DAVID + CATHY1690 WESTWOOD AV	11310 HIDALGO CTFORT MYERS, FL 33912	SFA2	$1,048.67	$1,667.26	$2,715.93
09-45-25-P2-00300.1410	CERMINARO FRANK J III +CERMINARO DEBORA	11314 HIDALGO CTFORT MYERS, FL 33912	SFA2	$1,048.67	$1,667.26	$2,715.93
09-45-25-P2-00300.1420	BALYEAT JAMES R & JUDITH A TRFOR JAMES R	11318 HIDALGO CTFORT MYERS, FL 33912	SFA2	$1,048.67	$1,667.26	$2,715.93
09-45-25-P2-00300.1430	BLASINI WILFREDO11322 HIDALGO CTFORT MYI	11322 HIDALGO CTFORT MYERS, FL 33912	SFA2	$1,048.67	$1,667.26	$2,715.93
09-45-25-P2-00300.1440	BELANGER PATRICIA L TR FOR PATRICIA L BELA	11326 HIDALGO CTFORT MYERS, FL 33912	SFA2	$1,048.67	$1,667.26	$2,715.93
09-45-25-P2-00300.1450	MEYER CAROL J TRFOR CAROL J MEYER REVO	11330 HIDALGO CTFORT MYERS, FL 33912	SFA2	$1,048.67	$1,667.26	$2,715.93

PASEO COMMUNITY DEVELOPMENT DISTRICT
2019 ASSESSMENT LIEN ROLL (UNIFORM METHOD)

STRAP	Owner	Site Address	LU	SERIES 2018 DEBT SERVICE	O&M	TOTAL
09-45-25-P2-00300.1460	HALEY KELLY D TRFOR KELLY D AHLEY TRUST	11323 HIDALGO CTFORT MYERS, FL 33912	SFA2	$1,048.67	$1,667.26	$2,715.93
09-45-25-P2-00300.1470	GREENE MARY CATHERINE TRFOR MARY CATH	11319 HIDALGO CTFORT MYERS, FL 33912	SFA2	$1,048.67	$1,667.26	$2,715.93
09-45-25-P2-00300.1480	COLETTA VINCENT J & NANCY11315 HIDALGO C	11315 HIDALGO CTFORT MYERS, FL 33912	SFA2	$1,048.67	$1,667.26	$2,715.93
09-45-25-P2-00300.1490	BOND DANIEL KENNETH & BOND FRANCES L11	11311 HIDALGO CTFORT MYERS, FL 33912	SFA2	$1,048.67	$1,667.26	$2,715.93
09-45-25-P2-00300.1500	GRAUEL RICHARD L +MULLER MARJORIE L H/W	11305 HIDALGO CTFORT MYERS, FL 33912	SFA2	$1,048.67	$1,667.26	$2,715.93
09-45-25-P2-00300.1510	LANGFORD ANTHONY R & LANGFORD KATHLEE	11301 HIDALGO CTFORT MYERS, FL 33912	SFA2	$1,048.67	$1,667.26	$2,715.93
09-45-25-P2-00300.1520	WEAVER JAMES M + TERRI L TRFOR TERRI L WE	11055 ESTEBAN DRFORT MYERS, FL 33912	SFA2	$1,048.67	$1,667.26	$2,715.93
09-45-25-P2-00300.1530	HILL WILLIAM D + DONNA D9353 PRATOLINO VI	11051 ESTEBAN DRFORT MYERS, FL 33912	SFA2	$1,048.67	$1,667.26	$2,715.93
09-45-25-P2-00300.1540	THOMPSON WILLIAM F + HISSAM LINDA F11047	11047 ESTEBAN DRFORT MYERS, FL 33912	SFA2	$1,048.67	$1,667.26	$2,715.93
09-45-25-P2-00300.1550	CASH CHARLES EDWARD & CASH JULIANA MAF	11043 ESTEBAN DRFORT MYERS, FL 33912	SFA2	$1,048.67	$1,667.26	$2,715.93
09-45-25-P2-00300.1560	SHAW TRAVIS R & SHAW BELINDA BERRY11035	11035 ESTEBAN DRFORT MYERS, FL 33912	SFA2	$1,048.67	$1,667.26	$2,715.93
09-45-25-P2-00300.1570	GOLDBERG PAUL + FRAN11027 ESTEBAN DRFOR	11027 ESTEBAN DRFORT MYERS, FL 33912	SFA2	$1,048.67	$1,667.26	$2,715.93
09-45-25-P2-00300.1580	PBT RESORT LLC11015 ESTEBAN DRFORT MYER	11015 ESTEBAN DRFORT MYERS, FL 33912	SFA2	$1,048.67	$1,667.26	$2,715.93
09-45-25-P2-00300.1590	ELIAS ROBERT P TRFOR ROBERT P ELIAS TRUST	11001 ESTEBAN DRFORT MYERS, FL 33912	SFA2	$1,048.67	$1,667.26	$2,715.93
09-45-25-P2-00300.1600	RAHILL JOHN GARY350 RUE ANDRE NSAINTE-SA	10987 ESTEBAN DRFORT MYERS, FL 33912	SFA2	$1,048.67	$1,667.26	$2,715.93
09-45-25-P2-00300.1610	BARBATO THOMAS J & MARY E8501 MACARIO C	8501 MACARIO CTFORT MYERS, FL 33912	SFA2	$1,048.67	$1,667.26	$2,715.93
09-45-25-P2-00300.1620	STEVENS JAMES T + ANDREA8505 MACARIO CT	8505 MACARIO CTFORT MYERS, FL 33912	SFA2	$1,048.67	$1,667.26	$2,715.93
09-45-25-P2-00300.1630	LAGUNA HILLS VENTURES INCMARCO ANTONI	8509 MACARIO CTFORT MYERS, FL 33912	SFA2	$1,048.67	$1,667.26	$2,715.93
09-45-25-P2-00300.1640	JOHN S EBERHARD LIVING TRUST +ELAINE F EE	8506 MACARIO CTFORT MYERS, FL 33912	SFA2	$1,048.67	$1,667.26	$2,715.93
09-45-25-P2-00300.1650	OROURKE PATRICIA ANN TRFOR PATRICIA A OR	8502 MACARIO CTFORT MYERS, FL 33912	SFA2	$1,048.67	$1,667.26	$2,715.93
09-45-25-P2-00300.1660	BRIAN MICHAEL MCGOURTY TRUST +ANNE AL	10975 ESTEBAN DRFORT MYERS, FL 33912	SFA2	$1,048.67	$1,667.26	$2,715.93
09-45-25-P2-00300.1670	WHEELER WOODROW W JR TR +WHEELER ROSA	10967 ESTEBAN DRFORT MYERS, FL 33912	SFA2	$1,048.67	$1,667.26	$2,715.93
09-45-25-P2-00300.1680	GAARDER TIMOTHY & JULIA6212 SCHAEFER CI	10959 ESTEBAN DRFORT MYERS, FL 33912	SFA2	$1,048.67	$1,667.26	$2,715.93
09-45-25-P2-00300.1690	MULLEN BRUCE & LYNETTE10953 ESTEBAN DR	10953 ESTEBAN DRFORT MYERS, FL 33912	SFA2	$1,048.67	$1,667.26	$2,715.93
09-45-25-P2-00300.1700	NORMAN JOHN TYLER + NORMAN CHERYL DEN	10949 ESTEBAN DRFORT MYERS, FL 33912	SFA2	$1,048.67	$1,667.26	$2,715.93
09-45-25-P2-00300.1710	MURPHY DANIEL H + SHARON L# 20235613650 F	10945 ESTEBAN DRFORT MYERS, FL 33912	SFA2	$1,048.67	$1,667.26	$2,715.93
09-45-25-P2-00300.1720	CHESLIK JOSEPH J & MALAI M10941 ESTEBAN D	10941 ESTEBAN DRFORT MYERS, FL 33912	SFA2	$1,048.67	$1,667.26	$2,715.93
09-45-25-P2-00300.1730	MILLER JOHN E + KAREN S2362 STATE RD 227 N	10940 ESTEBAN DRFORT MYERS, FL 33912	SFA2	$1,048.67	$1,667.26	$2,715.93
09-45-25-P2-00300.1740	WILLIAMS DOUGLAS A +PETERS PAMELA S H/W	10944 ESTEBAN DRFORT MYERS, FL 33912	SFA2	$1,048.67	$1,667.26	$2,715.93
09-45-25-P2-00300.1750	PEDULLA DENISE E10948 ESTEBAN DRFORT MY	10948 ESTEBAN DRFORT MYERS, FL 33912	SFA2	$1,048.67	$1,667.26	$2,715.93
09-45-25-P2-00300.1760	HILL DAVID G 1/2 + WRIGHT VICTORIA A 1/2 T/C1	10952 ESTEBAN DRFORT MYERS, FL 33912	SFA2	$1,048.67	$1,667.26	$2,715.93
09-45-25-P2-00300.1770	ZIEGLER DALE E TRFOR DALE E ZIEGLER TRUST	10956 ESTEBAN DRFORT MYERS, FL 33912	SFA2	$1,048.67	$1,667.26	$2,715.93
09-45-25-P2-00300.1780	LESKO JAMES E + KIMBERLY A7312 STOCKWOO	10960 ESTEBAN DRFORT MYERS, FL 33912	SFA2	$1,048.67	$1,667.26	$2,715.93
09-45-25-P2-00300.1790	DUSO JOHN E & VICKI L10964 ESTEBAN DRFORT	10964 ESTEBAN DRFORT MYERS, FL 33912	SFA2	$1,048.67	$1,667.26	$2,715.93
09-45-25-P2-00300.1800	PAWIELSKI MICAHEL & HOFFMAN JILL10968 EST	10968 ESTEBAN DRFORT MYERS, FL 33912	SFA2	$1,048.67	$1,667.26	$2,715.93
09-45-25-P2-00300.1810	JEFFERY PETER & LOUISE2120 ITABASHI WAY U	10972 ESTEBAN DRFORT MYERS, FL 33912	SFA2	$1,048.67	$1,667.26	$2,715.93
09-45-25-P2-00300.1820	INGRAM JEREMY D + KELLEY L10976 ESTEBAN	10976 ESTEBAN DRFORT MYERS, FL 33912	SFA2	$1,048.67	$1,667.26	$2,715.93
09-45-25-P2-00300.1830	VOLPE VINCE +VOLPE MICHELLE +VOLPE MON	10980 ESTEBAN DRFORT MYERS, FL 33912	SFA2	$1,048.67	$1,667.26	$2,715.93
09-45-25-P2-00300.1840	GORMAN MARTIN D + MARY SHARON10984 EST	10984 ESTEBAN DRFORT MYERS, FL 33912	SFA2	$1,048.67	$1,667.26	$2,715.93
09-45-25-P2-00300.1850	HARRIS PAUL A + SUZANNE P10988 ESTEBAN DR	10988 ESTEBAN DRFORT MYERS, FL 33912	SFA2	$1,048.67	$1,667.26	$2,715.93
09-45-25-P2-00300.1860	PIROFSKY HOWARD + MAUREEN25 WINDING BR	10992 ESTEBAN DRFORT MYERS, FL 33912	SFA2	$1,048.67	$1,667.26	$2,715.93
09-45-25-P2-00300.1870	DIMICELI JOHN +DIMICELI ILLONA J/T16 SHERW	10996 ESTEBAN DRFORT MYERS, FL 33912	SFA2	$1,048.67	$1,667.26	$2,715.93
09-45-25-P2-00300.1880	NORINE DEAN A + MARY J23395 PINEWOOD RD	11000 ESTEBAN DRFORT MYERS, FL 33912	SFA2	$1,048.67	$1,667.26	$2,715.93
09-45-25-P2-00300.1890	MANCUSO ANTONIO TRFOR ANTONIO MANCUS	11004 ESTEBAN DRFORT MYERS, FL 33912	SFA2	$1,048.67	$1,667.26	$2,715.93
09-45-25-P2-00300.1900	TYUTIN FEDOR + SARAH7871 S ARGONNE STCE	11008 ESTEBAN DRFORT MYERS, FL 33912	SFA2	$1,048.67	$1,667.26	$2,715.93
09-45-25-P2-00300.1910	LOWRY GARY + KELLY L11012 ESTEBAN DRFOR	11012 ESTEBAN DRFORT MYERS, FL 33912	SFA2	$1,048.67	$1,667.26	$2,715.93
09-45-25-P2-00300.1920	KAMINSKI DALE19 REGER RDSUCCASUNNA NJ,	11018 ESTEBAN DRFORT MYERS, FL 33912	SFA2	$1,048.67	$1,667.26	$2,715.93
09-45-25-P2-00300.1930	JEHAIMI CAYCE + BEITELMAL OMIMA H/W11022	11022 ESTEBAN DRFORT MYERS, FL 33912	SFA2	$1,048.67	$1,667.26	$2,715.93
09-45-25-P2-00300.1940	CHESLIK THOMAS W1 CONSULATE DR APT 2HTU	11026 ESTEBAN DRFORT MYERS, FL 33912	SFA2	$1,048.67	$1,667.26	$2,715.93
09-45-25-P2-00300.1950	MCDONNELL BRIAN & TAMARA11030 ESTEBAN	11030 ESTEBAN DRFORT MYERS, FL 33912	SFA2	$1,048.67	$1,667.26	$2,715.93
09-45-25-P2-00300.1960	PIROG STEPHEN T + KATHRYN D11034 ESTEBAN	11034 ESTEBAN DRFORT MYERS, FL 33912	SFA2	$1,048.67	$1,667.26	$2,715.93
09-45-25-P2-00300.1970	BASINAIT CHARLES J & BASINAIT ANDREA M11	11038 ESTEBAN DRFORT MYERS, FL 33912	SFA2	$1,048.67	$1,667.26	$2,715.93
09-45-25-P2-00300.1980	MORRIS JAMES J TR +PREUSS-MORRIS LESLIE T	11042 ESTEBAN DRFORT MYERS, FL 33912	SFA2	$1,048.67	$1,667.26	$2,715.93
09-45-25-P2-00300.1990	HURFORD MONICA L TRFOR MONICA L HURFOR	11046 ESTEBAN DRFORT MYERS, FL 33912	SFA2	$1,048.67	$1,667.26	$2,715.93

PASEO COMMUNITY DEVELOPMENT DISTRICT
2019 ASSESSMENT LIEN ROLL (UNIFORM METHOD)

STRAP	Owner	Site Address	LU	SERIES 2018 DEBT SERVICE	O&M	TOTAL
09-45-25-P2-00300.2000	MORGAN DENNIS PAUL & MORGAN RUTH ELAI	11050 ESTEBAN DRFORT MYERS, FL 33912	SFA2	$1,048.67	$1,667.26	$2,715.93
09-45-25-P2-0030A.0100	PASEO CDDRIZZETTA & COMPANY INC12750 CIT	RIGHT OF WAYFORT MYERS, FL	0	$0.00	$0.00	$0.00
09-45-25-P2-0030A.0200	PASEO CDDRIZZETTA & COMPANY INC12750 CIT	RIGHT OF WAYFORT MYERS, FL	0	$0.00	$0.00	$0.00
09-45-25-P2-0030B.0100	PASEO CDDRIZZETTA & COMPANY INC12750 CIT	ESPERANZA @ PASEO C/EFORT MYERS, FL	0	$0.00	$0.00	$0.00
09-45-25-P2-0030B.0200	PASEO CDDRIZZETTA & COMPANY INC12750 CIT	ESPERANZA @ PASEO C/EFORT MYERS, FL	0	$0.00	$0.00	$0.00
09-45-25-P2-0030B.0300	PASEO CDDRIZZETTA & COMPANY INC12750 CIT	ESPERANZA @ PASEO C/EFORT MYERS, FL	0	$0.00	$0.00	$0.00
09-45-25-P2-0030B.0400	PASEO CDDRIZZETTA & COMPANY INC12750 CIT	ESPERANZA @ PASEO C/EFORT MYERS, FL	0	$0.00	$0.00	$0.00
09-45-25-P2-00500.2010	KINGFIELD ARTHUR J + JOANNE TRFOR ARTHUR	8603 FALISTO PLFORT MYERS, FL 33912	SFA2	$1,048.67	$1,667.26	$2,715.93
09-45-25-P2-00500.2020	WATSON JOHN B & LINDA R8609 FALISTO PLFOR	8609 FALISTO PLFORT MYERS, FL 33912	SFA2	$1,048.67	$1,667.26	$2,715.93
09-45-25-P2-00500.2030	STARCEVIC ANTHONY TREVOR & STARCEVIC C	8615 FALISTO PLFORT MYERS, FL 33912	SFA2	$1,048.67	$1,667.26	$2,715.93
09-45-25-P2-00500.2040	HOPSON MARK A & TANYA S8619 FALISTO PLFO	8619 FALISTO PLFORT MYERS, FL 33912	SFA2	$1,048.67	$1,667.26	$2,715.93
09-45-25-P2-00500.2050	TANSKI DARYL R & CARLEEN8623 FALISTO PLFC	8623 FALISTO PLFORT MYERS, FL 33912	SFA2	$1,048.67	$1,667.26	$2,715.93
09-45-25-P2-00500.2060	MAGUIRE KENNETH & MAGUIRE CAROLE COLL	8627 FALISTO PLFORT MYERS, FL 33912	SFA2	$1,048.67	$1,667.26	$2,715.93
09-45-25-P2-00500.2070	BAASCH PETER C & MELISSA M3538 138TH AVE	8635 FALISTO PLFORT MYERS, FL 33912	SFA2	$1,048.67	$1,667.26	$2,715.93
09-45-25-P2-00500.2080	GRACIOSO LUIZ FRANCISCO & GRACIOSO MON	8639 FALISTO PLFORT MYERS, FL 33912	SFA2	$1,048.67	$1,667.26	$2,715.93
09-45-25-P2-00500.2090	COLLIER SHANE A & LAURA M8643 FALISTO PLF	8643 FALISTO PLFORT MYERS, FL 33912	SFA2	$1,048.67	$1,667.26	$2,715.93
09-45-25-P2-00500.2100	ROSCINI LAWRENCE J JR & ROSCINI DIANA J864	8647 FALISTO PLFORT MYERS, FL 33912	SFA2	$1,048.67	$1,667.26	$2,715.93
09-45-25-P2-00500.2110	COATS WILLIAM +COATS ANN J/T8651 FALISTO F	8651 FALISTO PLFORT MYERS, FL 33912	SFA2	$1,048.67	$1,667.26	$2,715.93
09-45-25-P2-00500.2120	HILD CHARLES N + ARLENE A8640 FALISTO PLFC	8640 FALISTO PLFORT MYERS, FL 33912	SFA2	$1,048.67	$1,667.26	$2,715.93
09-45-25-P2-00500.2130	JARCHOW CHERIE D TRFOR CHERIE D JARCHO	8636 FALISTO PLFORT MYERS, FL 33912	SFA2	$1,048.67	$1,667.26	$2,715.93
09-45-25-P2-00500.2140	KISH JOHN J III & MARCY L8632 FALISTO PLFOR	8632 FALISTO PLFORT MYERS, FL 33912	SFA2	$1,048.67	$1,667.26	$2,715.93
09-45-25-P2-00500.2150	KELLER MATTHEW W + SARAH J8628 FALISTO PI	8628 FALISTO PLFORT MYERS, FL 33912	SFA2	$1,048.67	$1,667.26	$2,715.93
09-45-25-P2-00500.2160	MURRAY DENNIS ALBERT & MURRAY BETH AN	8624 FALISTO PLFORT MYERS, FL 33912	SFA2	$1,048.67	$1,667.26	$2,715.93
09-45-25-P2-00500.2170	SOWERBY ERIN L8620 FALISTO PLFORT MYERS	8620 FALISTO PLFORT MYERS, FL 33912	SFA2	$1,048.67	$1,667.26	$2,715.93
09-45-25-P2-00500.2180	HERRON GAYLE L TRFOR GAYLE L HERRON TRU	8616 FALISTO PLFORT MYERS, FL 33912	SFA2	$1,048.67	$1,667.26	$2,715.93
09-45-25-P2-00500.2190	GREENBERG MARK ALAN & GREENBERG SAND	8612 FALISTO PLFORT MYERS, FL 33912	SFA2	$1,048.67	$1,667.26	$2,715.93
09-45-25-P2-00500.2200	MCLEOD LOMBARDO & LOURDES TRFOR MCLE	8608 FALISTO PLFORT MYERS, FL 33912	SFA2	$1,048.67	$1,667.26	$2,715.93
09-45-25-P2-00500.2210	GARZOLINI BRUNO JR & GARZOLINI KAREN L73	8604 FALISTO PLFORT MYERS, FL 33912	SFA2	$1,048.67	$1,667.26	$2,715.93
09-45-25-P2-00500.2220	VEDVYAS CHETAN & VEDVYAS CHRISTINE LEE	8600 FALISTO PLFORT MYERS, FL 33912	SFA2	$1,048.67	$1,667.26	$2,715.93
09-45-25-P2-00500.2230	SCHROPP RUSSELL P & SCHROPP BARBARA APC	11300 PASEO DRFORT MYERS, FL 33912	SFA2	$1,048.67	$1,667.26	$2,715.93
09-45-25-P2-00500.2240	NEIDIG ROBERT T SR & NEIDIG CAROL A90 WYA	11308 PASEO DRFORT MYERS, FL 33912	SFA2	$1,048.67	$1,667.26	$2,715.93
09-45-25-P2-00500.2250	FORNEY RONALD B & DEBORAH L11316 PASEO I	11316 PASEO DRFORT MYERS, FL 33912	SFA2	$1,048.67	$1,667.26	$2,715.93
09-45-25-P2-00500.2260	WENDEL THOMAS R & WENDEL DERYL LYNNE2	11320 PASEO DRFORT MYERS, FL 33912	SFA2	$1,048.67	$1,667.26	$2,715.93
09-45-25-P2-00500.2270	SCHUCHARDT JEFFREY DEAN & SCHUCHARDT	11324 PASEO DRFORT MYERS, FL 33912	SFA2	$1,048.67	$1,667.26	$2,715.93
09-45-25-P2-00500.2280	THOMPSON JAMES M JR & THOMPSON TAMARA	11328 PASEO DRFORT MYERS, FL 33912	SFA2	$1,048.67	$1,667.26	$2,715.93
09-45-25-P2-00500.2290	BABER MARK D & LINDA LEE11332 PASEO DRFC	11332 PASEO DRFORT MYERS, FL 33912	SFA2	$1,048.67	$1,667.26	$2,715.93
09-45-25-P2-00500.2300	HOLTYN KENNETH L/E719 TURWILL LNKALAMA	11336 PASEO DRFORT MYERS, FL 33912	SFA2	$1,048.67	$1,667.26	$2,715.93
09-45-25-P2-00500.2310	OLIVER IAN ALAN & OLIVER CATHRYN ELIZABE	11340 PASEO DRFORT MYERS, FL 33912	SFA2	$1,048.67	$1,667.26	$2,715.93
09-45-25-P2-00500.2320	SANTINI PASQUALE + SANTINI LAURYN M108 LI	11344 PASEO DRFORT MYERS, FL 33912	SFA2	$1,048.67	$1,667.26	$2,715.93
09-45-25-P2-00500.2330	RANDY C DARBY REV LIVING TRUST11200 HER	11348 PASEO DRFORT MYERS, FL 33912	SFA2	$1,048.67	$1,667.26	$2,715.93
09-45-25-P2-00500.2340	SACCA DOMINIC J3839 OAKLAND DRBLOOMFIE	11352 PASEO DRFORT MYERS, FL 33912	SFA2	$1,048.67	$1,667.26	$2,715.93
09-45-25-P2-00500.2350	SELVANTO JAY + CHARMAINE1014 CLAIRMORE	11356 PASEO DRFORT MYERS, FL 33912	SFA2	$1,048.67	$1,667.26	$2,715.93
09-45-25-P2-00500.2360	BRADLEY LAWRENCE J + NANCY S108 REMINGT	11360 PASEO DRFORT MYERS, FL 33912	SFA2	$1,048.67	$1,667.26	$2,715.93
09-45-25-P2-00500.2370	BAUMGARTEN STEPHEN R + BAUMGARTEN AN	11364 PASEO DRFORT MYERS, FL 33912	SFA2	$1,048.67	$1,667.26	$2,715.93
09-45-25-P2-00500.2380	BARRUS MARK E & JOAN140 ASHBOURNE DRW	11361 PASEO DRFORT MYERS, FL 33912	SFA2	$1,048.67	$1,667.26	$2,715.93
09-45-25-P2-00500.2390	GERSTEIN LEE HOWELL TRFOR GERSTEIN FAMI	11357 PASEO DRFORT MYERS, FL 33912	SFA2	$1,048.67	$1,667.26	$2,715.93
09-45-25-P2-00500.2400	CHECHILO RICHARD & DEBORAH7 WALLAND C	11353 PASEO DRFORT MYERS, FL 33912	SFA2	$1,048.67	$1,667.26	$2,715.93
09-45-25-P2-00500.2410	SGAMBELLURI COSIMO & NORMA22 ANDREW L	11349 PASEO DRFORT MYERS, FL 33912	SFA2	$1,048.67	$1,667.26	$2,715.93
09-45-25-P2-00500.2420	NICHOLS JAMES V + KATHLEEN M11341 PASEO I	11341 PASEO DRFORT MYERS, FL 33912	SFA2	$1,048.67	$1,667.26	$2,715.93
09-45-25-P2-00500.2430	LEE JEFFREY J & CATRINA T9450 SW GEMINI DR	8627 RENATA CTFORT MYERS, FL 33912	SFA2	$1,048.67	$1,667.26	$2,715.93
09-45-25-P2-00500.2440	WIEGARTNER PAUL JR & WIEGARTNER KATHLE	8631 RENATA CTFORT MYERS, FL 33912	SFA2	$1,048.67	$1,667.26	$2,715.93
09-45-25-P2-00500.2450	BARNES MATTHEW D11 WINDAWAY RDBETHEL	8635 RENATA CTFORT MYERS, FL 33912	SFA2	$1,048.67	$1,667.26	$2,715.93
09-45-25-P2-00500.2460	SMITH KRISTIN L & LUKE F8638 RENATA CTFOR	8638 RENATA CTFORT MYERS, FL 33912	SFA2	$1,048.67	$1,667.26	$2,715.93
09-45-25-P2-00500.2470	REINHOLD VERNON N & NORMA B56 RISLOVES	8634 RENATA CTFORT MYERS, FL 33912	SFA2	$1,048.67	$1,667.26	$2,715.93

PASEO COMMUNITY DEVELOPMENT DISTRICT
2019 ASSESSMENT LIEN ROLL (UNIFORM METHOD)

STRAP	Owner	Site Address	LU	SERIES 2018 DEBT SERVICE	O&M	TOTAL
09-45-25-P2-00500.2480	KOHLER MICHAEL TRFOR PETER KOHLER 2014 I	8630 RENATA CTFORT MYERS, FL 33912	SFA2	$1,048.67	$1,667.26	$2,715.93
09-45-25-P2-00500.2490	FEILER JOSEPH & FRANCES8626 RENATA CTFOR	8626 RENATA CTFORT MYERS, FL 33912	SFA2	$1,048.67	$1,667.26	$2,715.93
09-45-25-P2-00500.2500	LISICKI ROBERT & KELLY8622 RENATA CTFORT I	8622 RENATA CTFORT MYERS, FL 33912	SFA2	$1,048.67	$1,667.26	$2,715.93
09-45-25-P2-00500.2510	ELHAMMADY GINA11321 PASEO DRFORT MYER	11321 PASEO DRFORT MYERS, FL 33912	SFA2	$1,048.67	$1,667.26	$2,715.93
09-45-25-P2-00500.2520	COYNE KEVIN J + COYNE JANELLE M335 BRIDG	11317 PASEO DRFORT MYERS, FL 33912	SFA2	$1,048.67	$1,667.26	$2,715.93
09-45-25-P2-00500.2530	BULLARD JOHN E & SANDRA J22 HARPER RDMC	11313 PASEO DRFORT MYERS, FL 33912	SFA2	$1,048.67	$1,667.26	$2,715.93
09-45-25-P2-00500.2540	RYGIEL MICHELLE DAWN11309 PASEO DRFORT I	11309 PASEO DRFORT MYERS, FL 33912	SFA2	$1,048.67	$1,667.26	$2,715.93
09-45-25-P2-00500.2550	ZAMUDIO PASCUAL JR & ZAMUDIO KATHY J113	11305 PASEO DRFORT MYERS, FL 33912	SFA2	$1,048.67	$1,667.26	$2,715.93
09-45-25-P2-00500.2560	BARBER JAMES P11301 PASEO DRFORT MYERS I	11301 PASEO DRFORT MYERS, FL 33912	SFA2	$1,048.67	$1,667.26	$2,715.93
09-45-25-P2-0050A.0000	PASEO CDDRIZZETTA & COMPANY INC12750 CIT	RIGHT OF WAYFORT MYERS, FL 33912	0	$0.00	$0.00	$0.00
09-45-25-P2-005B1.0000	PASEO CDDRIZZETTA & COMPANY INC12750 CIT	RIGHT OF WAYFORT MYERS, FL 33912	0	$0.00	$0.00	$0.00
09-45-25-P2-005B2.0000	PASEO CDDRIZZETTA & COMPANY INC12750 CIT	RIGHT OF WAYFORT MYERS, FL 33912	0	$0.00	$0.00	$0.00
09-45-25-P2-005B3.0000	PASEO CDDRIZZETTA & COMPANY INC12750 CIT	RIGHT OF WAYFORT MYERS, FL 33912	0	$0.00	$0.00	$0.00
09-45-25-P3-00100.0710	PEEBLES DAVID +BRASSFIELD NANCY H/W1548	8227 PROVENCIA CTFORT MYERS, FL 33912	SFA1	$1,048.67	$1,667.26	$2,715.93
09-45-25-P3-00100.0720	J + S BUILDING CO9658 N 1175 WMONTICELLO IN	8223 PROVENCIA CTFORT MYERS, FL 33912	SFA1	$1,048.67	$1,667.26	$2,715.93
09-45-25-P3-00100.0920	CORRENTI CHRISTOPHER T & CORRENTI CYNTI	8601 MERCADO CTFORT MYERS, FL 33912	SFA1	$1,048.67	$1,667.26	$2,715.93
09-45-25-P3-00100.0930	RATTNER-RENZ BETH O8607 MERCADO CTFORT	8607 MERCADO CTFORT MYERS, FL 33912	SFA1	$1,048.67	$1,667.26	$2,715.93
09-45-25-P3-00100.0940	LATELL JOHN D SR & LATELL MARILYN A TRFOR	8613 MERCADO CTFORT MYERS, FL 33912	SFA1	$1,048.67	$1,667.26	$2,715.93
09-45-25-P3-00100.0950	FIGUEROA-REYES NORIS R8619 MERCADO CTFC	8619 MERCADO CTFORT MYERS, FL 33912	SFA1	$1,048.67	$1,667.26	$2,715.93
09-45-25-P3-00100.0960	HELLER PETER F + MICHELE A3 WAGON TRAIL R	8623 MERCADO CTFORT MYERS, FL 33912	SFA1	$1,048.67	$1,667.26	$2,715.93
09-45-25-P3-00100.0970	SARMAZIAN VAHE S + KATHY TR FOR VAHE STE	8629 MERCADO CTFORT MYERS, FL 33912	SFA1	$1,048.67	$1,667.26	$2,715.93
09-45-25-P3-00100.0980	VERA ENRIQUE + SARA G8637 MERCADO CTFOR	8637 MERCADO CTFORT MYERS, FL 33912	SFA1	$1,048.67	$1,667.26	$2,715.93
09-45-25-P3-00100.0990	HENGELI JULIUS J JR + JANICE27 PIZZULLO RDT	8645 MERCADO CTFORT MYERS, FL 33912	SFA1	$1,048.67	$1,667.26	$2,715.93
09-45-25-P3-00100.1000	PDW INVESTMENTS LLC13704 SUNSET LAKE CIR	8651 MERCADO CTFORT MYERS, FL 33912	SFA1	$1,048.67	$1,667.26	$2,715.93
09-45-25-P3-00100.1010	PATTON DONNA S TRFOR PATTON REVOCABLE T	8657 MERCADO CTFORT MYERS, FL 33912	SFA1	$1,048.67	$1,667.26	$2,715.93
09-45-25-P3-00100.1020	SCHOONOVER JAMES C + CANDY M55298 LORD	8661 MERCADO CTFORT MYERS, FL 33912	SFA1	$1,048.67	$1,667.26	$2,715.93
09-45-25-P3-00100.1030	CARPENITO CAROLYN M38 UNDERHILL AVE APT	8665 MERCADO CTFORT MYERS, FL 33912	SFA1	$1,048.67	$1,667.26	$2,715.93
09-45-25-P3-00100.1040	PALLADINO THEODORE M +PALLADINO LUCIA A	8671 MERCADO CTFORT MYERS, FL 33912	SFA1	$1,048.67	$1,667.26	$2,715.93
09-45-25-P3-00100.1050	BASKIN RUSSELL M + LISA M34 ANDERSON WAY	8677 MERCADO CTFORT MYERS, FL 33912	SFA2	$1,048.67	$1,667.26	$2,715.93
09-45-25-P3-00100.1060	ELL GORDON & TIFFANY1 MAINSTREET BOX 58	8683 MERCADO CTFORT MYERS, FL 33912	SFA1	$1,048.67	$1,667.26	$2,715.93
09-45-25-P3-00100.1070	AMBER LISA KATHERINE8688 MERCADO COURT	8688 MERCADO CTFORT MYERS, FL 33912	SFA1	$1,048.67	$1,667.26	$2,715.93
09-45-25-P3-00100.1080	CHANAMOLU RAJI TRFOR RAJI CHANAMOLU TR	8682 MERCADO CTFORT MYERS, FL 33912	SFA1	$1,048.67	$1,667.26	$2,715.93
09-45-25-P3-00100.1090	CANGIALOSI FRANK + GIOVANNA8676 MERCAD	8676 MERCADO CTFORT MYERS, FL 33912	SFA1	$1,048.67	$1,667.26	$2,715.93
09-45-25-P3-00100.1100	CHURCH ROBERT P TRFOR ROBERT P CHURCH T	8670 MERCADO CTFORT MYERS, FL 33912	SFA1	$1,048.67	$1,667.26	$2,715.93
09-45-25-P3-00100.1110	SUTLEY MICHAEL K + DEANN M TRFOR SUTLEY	8664 MERCADO CTFORT MYERS, FL 33912	SFA1	$1,048.67	$1,667.26	$2,715.93
09-45-25-P3-00100.1120	KORTE WAYNE +KORTE LINDA1377 STOWE AVE	8658 MERCADO CTFORT MYERS, FL 33912	SFA1	$1,048.67	$1,667.26	$2,715.93
09-45-25-P3-00100.1130	JOSEPH WAYNE + MARGARET +JOSEPH JODY + I	8652 MERCADO CTFORT MYERS, FL 33912	SFA1	$1,048.67	$1,667.26	$2,715.93
09-45-25-P3-00100.1140	SARMAZIAN JACK + LISA TRFOR H JACK SARMA	8646 MERCADO CTFORT MYERS, FL 33912	SFA1	$1,048.67	$1,667.26	$2,715.93
09-45-25-P3-00100.1150	TOLMIE DANIEL + MARIA8640 MERCADO CTFOR	8640 MERCADO CTFORT MYERS, FL 33912	SFA1	$1,048.67	$1,667.26	$2,715.93
09-45-25-P3-00100.1160	KONOPASKE BRADLEY R + YVONNE M5 CLINTO	8634 MERCADO CTFORT MYERS, FL 33912	SFA1	$1,048.67	$1,667.26	$2,715.93
09-45-25-P3-00100.1170	CUZZOCREA ANTHONY P TRFOR CUZZOCREA F	8628 MERCADO CTFORT MYERS, FL 33912	SFA1	$1,048.67	$1,667.26	$2,715.93
09-45-25-P3-00100.1180	CLEMMER RICHARD TR +CLEMMER MARY ANN	8622 MERCADO CTFORT MYERS, FL 33912	SFA1	$1,048.67	$1,667.26	$2,715.93
09-45-25-P3-00100.1190	SCHULMAN SHELDON C & SCHULMAN SHARON	8616 MERCADO CTFORT MYERS, FL 33912	SFA1	$1,048.67	$1,667.26	$2,715.93
09-45-25-P3-00100.1200	MCCAFFERY JEAN MARIE TRFOR JEAN MARIE M	8610 MERCADO CTFORT MYERS, FL 33912	SFA1	$1,048.67	$1,667.26	$2,715.93
09-45-25-P3-00100.1210	BONWELL BRETT V + PENNY J TRFOR BRETT V I	8799 SARITA CTFORT MYERS, FL 33912	SFA1	$1,048.67	$1,667.26	$2,715.93
09-45-25-P3-00100.1220	DANDREA MARY ANNE TRFOR MARY ANNE DA	8805 SARITA CTFORT MYERS, FL 33912	SFA1	$1,048.67	$1,667.26	$2,715.93
09-45-25-P3-00100.1230	KOLUPANOWICH NICHOLAS C +KOLUPANOWIC	8809 SARITA CTFORT MYERS, FL 33912	SFA2	$1,048.67	$1,667.26	$2,715.93
09-45-25-P3-00100.1240	DEBROUX DEAN L + AMY M L/E8813 SARITA CTF	8813 SARITA CTFORT MYERS, FL 33912	SFA1	$1,048.67	$1,667.26	$2,715.93
09-45-25-P3-00100.1250	MERCIER THOMAS G +MERCIER SANDRA L J/T34	8817 SARITA CTFORT MYERS, FL 33912	SFA1	$1,048.67	$1,667.26	$2,715.93
09-45-25-P3-00100.1260	DELUCA MICHAEL P & ADAMS EDITH M8819 SA	8819 SARITA CTFORT MYERS, FL 33912	SFA2	$1,048.67	$1,667.26	$2,715.93
09-45-25-P3-00100.1270	CIMMINO LOUIS J L/E +CIMMINO ELAINE M L/E8	8823 SARITA CTFORT MYERS, FL 33912	SFA1	$1,048.67	$1,667.26	$2,715.93
09-45-25-P3-00100.1280	RICHARD DEAN KIRSCHNER TRUST +SHERRY L	8829 SARITA CTFORT MYERS, FL 33912	SFA2	$1,048.67	$1,667.26	$2,715.93
09-45-25-P3-00100.1290	CRANFILL JOHN C JR + JANET D8835 SARITA CTF	8835 SARITA CTFORT MYERS, FL 33912	SFA1	$1,048.67	$1,667.26	$2,715.93
09-45-25-P3-00100.1300	CAUDILL KIMBERLY A8841 SARITA CTFORT MYE	8841 SARITA CTFORT MYERS, FL 33912	SFA1	$1,048.67	$1,667.26	$2,715.93

PASEO COMMUNITY DEVELOPMENT DISTRICT
2019 ASSESSMENT LIEN ROLL (UNIFORM METHOD)

STRAP	Owner	Site Address	LU	SERIES 2018 DEBT SERVICE	O&M	TOTAL
09-45-25-P3-00100.1310	MIRR RICHARD L + MAYCEL W TRFOR MIRR TRU	8847 SARITA CTFORT MYERS, FL 33912	SFA1	$1,048.67	$1,667.26	$2,715.93
09-45-25-P3-00100.1320	HYNES JAMES J & JODEAN M8854 SARITA CTFO	8854 SARITA CTFORT MYERS, FL 33912	SFA1	$1,048.67	$1,667.26	$2,715.93
09-45-25-P3-00100.1330	ELSTON JAMES8848 SARITA CTFORT MYERS FL,	8848 SARITA CTFORT MYERS, FL 33912	SFA1	$1,048.67	$1,667.26	$2,715.93
09-45-25-P3-00100.1340	ARNTZ MICHAEL C TR +ARNTZ VICTORIA D TRF	8842 SARITA CTFORT MYERS, FL 33912	SFA1	$1,048.67	$1,667.26	$2,715.93
09-45-25-P3-00100.1350	BENNETT TONY A & PATEL DIPAL K8836 SARITA	8836 SARITA CTFORT MYERS, FL 33912	SFA1	$1,048.67	$1,667.26	$2,715.93
09-45-25-P3-00100.1360	KLEINKORT DONALD B TRFOR DONALD B KLEI	8830 SARITA CTFORT MYERS, FL 33912	SFA1	$1,048.67	$1,667.26	$2,715.93
09-45-25-P3-00100.1370	KRUSEMARK LYNETTE M TRFOR LYNETTE KRU	8824 SARITA CTFORT MYERS, FL 33912	SFA1	$1,048.67	$1,667.26	$2,715.93
09-45-25-P3-00100.1380	BAHL ROBERT C + BAHL KERRY L1632 51ST STR	8818 SARITA CTFORT MYERS, FL 33912	SFA1	$1,048.67	$1,667.26	$2,715.93
09-45-25-P3-00100.1390	DENNIS SCHUTZ TRUST +MEYER PATRICIA S881	8812 SARITA CTFORT MYERS, FL 33912	SFA1	$1,048.67	$1,667.26	$2,715.93
09-45-25-P3-00100.1400	HAUGRUD VICTOR O + JENNIFER L23344 SUNSE	8806 SARITA CTFORT MYERS, FL 33912	SFA1	$1,048.67	$1,667.26	$2,715.93
09-45-25-P3-00100.1410	KAISER DAVID M +KAISER CYNTHIA M J/T500 Y	8800 SARITA CTFORT MYERS, FL 33912	SFA1	$1,048.67	$1,667.26	$2,715.93
09-45-25-P3-0010A.0010	PASEO CDDRIZZETTA & COMPANY INC12750 CIT	11980 PASEO GRANDE BLVDFORT MYERS, FL	0	$0.00	$0.00	$0.00
09-45-25-P3-0010A.0200	PASEO CDDRIZZETTA & COMPANY INC12750 CIT	RIGHT OF WAYFORT MYERS, FL	0	$0.00	$0.00	$0.00
09-45-25-P3-0010A.0300	PASEO CDDRIZZETTA & COMPANY INC12750 CIT	RIGHT OF WAYFORT MYERS, FL	0	$0.00	$0.00	$0.00
09-45-25-P3-0010C.0060	PASEO CDDRIZZETTA & COMPANY INC12750 CIT	SUBMERGEDFORT MYERS, FL	0	$0.00	$0.00	$0.00
09-45-25-P3-0010C.0070	PASEO CDDRIZZETTA & COMPANY INC12750 CIT	SUBMERGEDFORT MYERS, FL	0	$0.00	$0.00	$0.00
09-45-25-P3-0010C.0080	PASEO CDDRIZZETTA & COMPANY INC12750 CIT	SUBMERGEDFORT MYERS, FL	0	$0.00	$0.00	$0.00
09-45-25-P3-0010C.0090	PASEO CDDRIZZETTA & COMPANY INC12750 CIT	SUBMERGEDFORT MYERS, FL	0	$0.00	$0.00	$0.00
09-45-25-P3-0010C.0100	PASEO CDDRIZZETTA & COMPANY INC12750 CIT	SUBMERGEDFORT MYERS, FL	0	$0.00	$0.00	$0.00
09-45-25-P3-0010D.0010	PASEO CDDRIZZETTA & COMPANY INC12750 CIT	PASEO C/EFORT MYERS, FL	0	$0.00	$0.00	$0.00
09-45-25-P3-0010E.0010	PASEO CDDRIZZETTA & COMPANY INC12750 CIT	PASEO C/EFORT MYERS, FL	0	$0.00	$0.00	$0.00
09-45-25-P3-0010E.0020	PASEO CDDRIZZETTA & COMPANY INC12750 CIT	PASEO C/EFORT MYERS, FL	0	$0.00	$0.00	$0.00
09-45-25-P3-0010E.0030	PASEO CDDRIZZETTA & COMPANY INC12750 CIT	PASEO C/EFORT MYERS, FL	0	$0.00	$0.00	$0.00
09-45-25-P3-0010E.0040	PASEO CDDRIZZETTA & COMPANY INC12750 CIT	PASEO C/EFORT MYERS, FL	0	$0.00	$0.00	$0.00
09-45-25-P3-0010E.0070	PASEO CDDRIZZETTA & COMPANY INC12750 CIT	PASEO C/EFORT MYERS, FL	0	$0.00	$0.00	$0.00
09-45-25-P3-0010E.0080	PASEO CDDRIZZETTA & COMPANY INC12750 CIT	PASEO C/EFORT MYERS, FL	0	$0.00	$0.00	$0.00
09-45-25-P3-00200.4001	HUMANN THOMAS A40 STORM DRHOLTSVILLE	11947 TULIO WAY 4001FORT MYERS, FL 33912	MFA1	$524.34	$1,742.36	$2,266.70
09-45-25-P3-00200.4002	RONKIN CHARLES A + KARLA D11947 TULIO WA	11947 TULIO WAY 4002FORT MYERS, FL 33912	MFA1	$524.34	$1,742.36	$2,266.70
09-45-25-P3-00200.4003	KRP LLC2737 WINTON CTWEST DUNDEE IL, 6011	11947 TULIO WAY 4003FORT MYERS, FL 33912	MFA1	$524.34	$1,742.36	$2,266.70
09-45-25-P3-00200.4004	MIANI ROBERT7 SEIR HILL RD APT 21NORWALK	11947 TULIO WAY 4004FORT MYERS, FL 33912	MFA1	$524.34	$1,742.36	$2,266.70
09-45-25-P3-00200.4005	FONTAN JUAN E + EVELYN35 GREYCOURT AVE	11947 TULIO WAY 4005FORT MYERS, FL 33912	MFA1	$524.34	$1,742.36	$2,266.70
09-45-25-P3-00200.4006	HARRINGTON SCOTT A SR + SOPHIA NANCY ET	11947 TULIO WAY 4006FORT MYERS, FL 33912	MFA1	$524.34	$1,742.36	$2,266.70
09-45-25-P3-00200.4101	WYCKS BRENDAN TR +TROY VALERIE TRFOR B	11920 PASEO GRANDE BLVD 4101FORT MYERS, FL 33912	MFA1	$524.34	$1,742.36	$2,266.70
09-45-25-P3-00200.4102	DECRISTOFANO GIUSEPPE M +DECRISTOFANO N	11920 PASEO GRANDE BLVD 4102FORT MYERS, FL 33912	MFA1	$524.34	$1,742.36	$2,266.70
09-45-25-P3-00200.4103	ALTIERI LISA M53 CALDER STPAWTUCKET RI, 02	11920 PASEO GRANDE BLVD 4103FORT MYERS, FL 33912	MFA1	$524.34	$1,742.36	$2,266.70
09-45-25-P3-00200.4104	ABRAMS ANDREA TRFOR ANDREA ABRAMS TRU	11920 PASEO GRANDE BLVD 4104FORT MYERS, FL 33912	MFA1	$524.34	$1,742.36	$2,266.70
09-45-25-P3-00200.4105	BOERSMA DAVID11920 PASEO GRANDE BLVD #4	11920 PASEO GRANDE BLVD 4105FORT MYERS, FL 33912	MFA1	$524.34	$1,742.36	$2,266.70
09-45-25-P3-00200.4106	SCHMIDT DANIEL R TR +SCHMIDT ZENAIDA H T	11920 PASEO GRANDE BLVD 4106FORT MYERS, FL 33912	MFA1	$524.34	$1,742.36	$2,266.70
09-45-25-P3-00200.4107	EMOND LEO A11920 PASEO GRANDE BLVD #4107	11920 PASEO GRANDE BLVD 4107FORT MYERS, FL 33912	MFA1	$524.34	$1,742.36	$2,266.70
09-45-25-P3-00200.4108	DE PAZ GABRIEL11920 PASEO GRANDE BLVD #4	11920 PASEO GRANDE BLVD 4108FORT MYERS, FL 33912	MFA1	$524.34	$1,742.36	$2,266.70
09-45-25-P3-00200.4109	CARR JORDAN & TRISHA11920 PASEO GRANDE	11920 PASEO GRANDE BLVD 4109FORT MYERS, FL 33912	MFA1	$524.34	$1,742.36	$2,266.70
09-45-25-P3-00200.4110	LILLANEY ARUN G + LILLANEY KARISHMA A J/T	11920 PASEO GRANDE BLVD 4110FORT MYERS, FL 33912	MFA1	$524.34	$1,742.36	$2,266.70
09-45-25-P3-00200.4111	SNYDER GRAHAM +SNYDER LUANN J/T28-525 B	11920 PASEO GRANDE BLVD 4111FORT MYERS, FL 33912	MFA1	$524.34	$1,742.36	$2,266.70
09-45-25-P3-00200.4112	NIRANA HOLDINGS LLC5295 LAKEMONT CTMU	11920 PASEO GRANDE BLVD 4112FORT MYERS, FL 33912	MFA1	$524.34	$1,742.36	$2,266.70
09-45-25-P3-00200.4201	NADALIN HENRY +NADALIN JACKIE J/T806 SYE	11889 TULIO WAY 4201FORT MYERS, FL 33912	MFA1	$524.34	$1,742.36	$2,266.70
09-45-25-P3-00200.4202	FORNARO PHILIP + DEBORAH A6 STONE BRIAR	11889 TULIO WAY 4202FORT MYERS, FL 33912	MFA1	$524.34	$1,742.36	$2,266.70
09-45-25-P3-00200.4203	FINE IRA J + FINE BOBBIE11889 TULIO WAY#4203	11889 TULIO WAY 4203FORT MYERS, FL 33912	MFA1	$524.34	$1,742.36	$2,266.70
09-45-25-P3-00200.4204	MUNDSCHENK JAMES DONALD11889 TULIO WA	11889 TULIO WAY 4204FORT MYERS, FL 33912	MFA1	$0.00	$1,742.36	$1,742.36
09-45-25-P3-00200.4205	RUBIANO ROBERT L + ALICIA M11889 TULIO WA	11889 TULIO WAY 4205FORT MYERS, FL 33912	MFA1	$524.34	$1,742.36	$2,266.70
09-45-25-P3-00200.4301	MURPHY DONALD P II +BARR KELLY M H/W64 D	11890 PASEO GRANDE BLVD 4301FORT MYERS, FL 33912	MFA1	$524.34	$1,742.36	$2,266.70
09-45-25-P3-00200.4302	KOUTRAS NICHOLAS + SNEZANAN5935 SOVER	11890 PASEO GRANDE BLVD 4302FORT MYERS, FL 33912	MFA1	$524.34	$1,742.36	$2,266.70
09-45-25-P3-00200.4303	WILLIAMS SHARON TRFOR SHARON WILLIAMS	11890 PASEO GRANDE BLVD 4303FORT MYERS, FL 33912	MFA1	$524.34	$1,742.36	$2,266.70
09-45-25-P3-00200.4304	KOPLIK CARYN BETH11890 PASEO GRANDE BLV	11890 PASEO GRANDE BLVD 4304FORT MYERS, FL 33912	MFA1	$524.34	$1,742.36	$2,266.70
09-45-25-P3-00200.4305	GOERL WILLIAM JPO BOX 211BRIGHTWATERS N	11890 PASEO GRANDE BLVD 4305FORT MYERS, FL 33912	MFA1	$524.34	$1,742.36	$2,266.70

PASEO COMMUNITY DEVELOPMENT DISTRICT
2019 ASSESSMENT LIEN ROLL (UNIFORM METHOD)

STRAP	Owner	Site Address	LU	SERIES 2018 DEBT SERVICE	O&M	TOTAL
09-45-25-P3-00200.4401	OLIVER TOBY 1/2 + MARTINEZ NIKKI 1/2 T/C1186	11861 TULIO WAY 4401FORT MYERS, FL 33912	MFA2	$524.34	$1,742.36	$2,266.70
09-45-25-P3-00200.4402	CHIAPPETTA JOSEPH + DIANE23 WALKER DRCA	11861 TULIO WAY 4402FORT MYERS, FL 33912	MFA2	$524.34	$1,742.36	$2,266.70
09-45-25-P3-00200.4403	GERARD WIKTOR HOLDINGS LLC16748-9C SMOI	11861 TULIO WAY 4403FORT MYERS, FL 33912	MFA2	$524.34	$1,742.36	$2,266.70
09-45-25-P3-00200.4404	GRANT JENNIFER11861 TULIO WAY # 4404FORT M	11861 TULIO WAY 4404FORT MYERS, FL 33912	MFA2	$524.34	$1,742.36	$2,266.70
09-45-25-P3-00200.4405	ZUROMSKI ROBERT C + SUSAN L58 E GLEN DRT	11861 TULIO WAY 4405FORT MYERS, FL 33912	MFA2	$524.34	$1,742.36	$2,266.70
09-45-25-P3-00200.4501	PURNELL MICHAEL H + SHARON TRFOR MICHAI	11860 PASEO GRANDE BLVD 4501FORT MYERS, FL 33912	MFA1	$524.34	$1,742.36	$2,266.70
09-45-25-P3-00200.4502	ROGERS RANDEL A TRFOR RANDEL A ROGERS T	11860 PASEO GRANDE BLVD 4502FORT MYERS, FL 33912	MFA1	$0.00	$1,742.36	$1,742.36
09-45-25-P3-00200.4503	CARON DENISE P TRFOR DENISE P CARON TRUS	11860 PASEO GRANDE BLVD 4503FORT MYERS, FL 33912	MFA1	$524.34	$1,742.36	$2,266.70
09-45-25-P3-00200.4504	TOLIC GABRIELLA TR +BOLLEFER STUART TRFO	11860 PASEO GRANDE BLVD 4504FORT MYERS, FL 33912	MFA1	$524.34	$1,742.36	$2,266.70
09-45-25-P3-00200.4505	LINES JACOB T +LINES MEGAN E J/T11860 PASEO	11860 PASEO GRANDE BLVD 4505FORT MYERS, FL 33912	MFA1	$524.34	$1,742.36	$2,266.70
09-45-25-P3-00200.4601	PEARSON DONALD R JR + JEAN M326 RIVER KN	11830 PASEO GRANDE BLVD 4601FORT MYERS, FL 33912	MFA2	$524.34	$1,742.36	$2,266.70
09-45-25-P3-00200.4602	NEWCOM ROBERT D +HARRIS GLENDA NANETT	11830 PASEO GRANDE BLVD 4602FORT MYERS, FL 33912	MFA2	$524.34	$1,742.36	$2,266.70
09-45-25-P3-00200.4603	ROTONDI ALBERT J JR TRFOR ALBERT J ROTONI	11830 PASEO GRANDE BLVD 4603FORT MYERS, FL 33912	MFA2	$524.34	$1,742.36	$2,266.70
09-45-25-P3-00200.4604	JADUNATH BLAIR + NADINE11830 PASEO GRANI	11830 PASEO GRANDE BLVD 4604FORT MYERS, FL 33912	MFA2	$524.34	$1,742.36	$2,266.70
09-45-25-P3-00200.4605	MUKKAVILLI GANGA303 5TH AVE STE 1205NEW	11830 PASEO GRANDE BLVD 4605FORT MYERS, FL 33912	MFA2	$524.34	$1,742.36	$2,266.70
09-45-25-P3-00200.4606	VALENTINO FRANKMIDLAND TRUST COMPANY	11830 PASEO GRANDE BLVD 4606FORT MYERS, FL 33912	MFA2	$524.34	$1,742.36	$2,266.70
09-45-25-P3-00200.4607	EARNEY MATTHEW L11830 PASEO GRANDE BLV	11830 PASEO GRANDE BLVD 4607FORT MYERS, FL 33912	MFA2	$524.34	$1,742.36	$2,266.70
09-45-25-P3-00200.4608	TROY BARBARA A181 BLIGH STTEWKSBURY MA	11830 PASEO GRANDE BLVD 4608FORT MYERS, FL 33912	MFA2	$524.34	$1,742.36	$2,266.70
09-45-25-P3-00200.4609	MANCHI RAVI113 ST CLAIR CTPRINCETON NJ, 08	11830 PASEO GRANDE BLVD 4609FORT MYERS, FL 33912	MFA2	$524.34	$1,742.36	$2,266.70
09-45-25-P3-00200.4610	NIEZGORSKI EDWIN J +SHIPLEY LAURA H H/W93	11830 PASEO GRANDE BLVD 4610FORT MYERS, FL 33912	MFA2	$524.34	$1,742.36	$2,266.70
09-45-25-P3-00200.4611	BARTLETT MICHAEL J + MARY C2196 FOX CHAS	11830 PASEO GRANDE BLVD 4611FORT MYERS, FL 33912	MFA2	$524.34	$1,742.36	$2,266.70
09-45-25-P3-00200.4612	BODETTI ANGELO +AYRES TIFFANY J/T11751 RO	11830 PASEO GRANDE BLVD 4612FORT MYERS, FL 33912	MFA2	$524.34	$1,742.36	$2,266.70
09-45-25-P3-00200.4701	MALDONADO EVELYN L11796 PASEO GRANDE B	11796 PASEO GRANDE BLVD 4701FORT MYERS, FL 33912	MFA2	$524.34	$1,742.36	$2,266.70
09-45-25-P3-00200.4702	WALKER AMELIA R +WALKER RENEE A J/T11796	11796 PASEO GRANDE BLVD 4702FORT MYERS, FL 33912	MFA2	$524.34	$1,742.36	$2,266.70
09-45-25-P3-00200.4703	PASEO LLC36630 HEATHERTON DRFARMINGTON	11796 PASEO GRANDE BLVD 4703FORT MYERS, FL 33912	MFA2	$524.34	$1,742.36	$2,266.70
09-45-25-P3-00200.4704	STONE LINDA MARY12122 MISSISSIPPI DRCHAM	11796 PASEO GRANDE BLVD 4704FORT MYERS, FL 33912	MFA2	$524.34	$1,742.36	$2,266.70
09-45-25-P3-00200.4705	DREHLE EDWARD + BARBARA12 DEERFIELD TE	11796 PASEO GRANDE BLVD 4705FORT MYERS, FL 33912	MFA2	$524.34	$1,742.36	$2,266.70
09-45-25-P3-00200.4706	DENA M MOERITZ TRUST +OLIVER O MOERITZ T	11796 PASEO GRANDE BLVD 4706FORT MYERS, FL 33912	MFA2	$524.34	$1,742.36	$2,266.70
09-45-25-P3-00200.4707	CANGIALOSI VINCENT A + CANGIALOSI ELIZAB	11796 PASEO GRANDE BLVD 4707FORT MYERS, FL 33912	MFA2	$524.34	$1,742.36	$2,266.70
09-45-25-P3-00200.4708	GRISSOM ILA JEAN + GRISSOM BRUCE J ET AL11	11796 PASEO GRANDE BLVD 4708FORT MYERS, FL 33913	MFA2	$524.34	$1,742.36	$2,266.70
09-45-25-P3-00200.4709	PALAIA KATHLEEN N TRFOR KATHLEEN NIXON	11796 PASEO GRANDE BLVD 4709FORT MYERS, FL 33912	MFA2	$524.34	$1,742.36	$2,266.70
09-45-25-P3-00200.4710	TANG ANDREW JOSEPH + TANG EMILY LAUREN	11796 PASEO GRANDE BLVD 4710FORT MYERS, FL 33912	MFA2	$524.34	$1,742.36	$2,266.70
09-45-25-P3-00200.4711	COTE JOCELYN +FORTIN JOSEE J/T510-500 BOUL	11796 PASEO GRANDE BLVD 4711FORT MYERS, FL 33912	MFA2	$524.34	$1,742.36	$2,266.70
09-45-25-P3-00200.4712	THESIER ROBERT M11796 PASEO GRANDE BLVD	11796 PASEO GRANDE BLVD 4712FORT MYERS, FL 33912	MFA2	$524.34	$1,742.36	$2,266.70
09-45-25-P3-00200.4801	STEINHILBER JAY K TRFOR JAY K STEINHILBER	11767 TULIO WAY 4801FORT MYERS, FL 33912	MFA2	$524.34	$1,742.36	$2,266.70
09-45-25-P3-00200.4802	KHAN WAHEED1516 ORCHARD CIRNAPERVILLE	11767 TULIO WAY 4802FORT MYERS, FL 33912	MFA2	$524.34	$1,742.36	$2,266.70
09-45-25-P3-00200.4803	DEACY KATHLEEN A +GOWAN DANIEL R J/T117	11767 TULIO WAY 4803FORT MYERS, FL 33912	MFA2	$524.34	$1,742.36	$2,266.70
09-45-25-P3-00200.4804	GRANDILLO JOHN S + SUSAN M11767 TULIO WA	11767 TULIO WAY 4804FORT MYERS, FL 33912	MFA2	$524.34	$1,742.36	$2,266.70
09-45-25-P3-00200.4805	ADORNETTO MAURICIO TRFOR DLR HOLDINGS	11767 TULIO WAY 4805FORT MYERS, FL 33912	MFA2	$524.34	$1,742.36	$2,266.70
09-45-25-P3-00200.4901	BRADLEY WILLIAM T JR32 GROVE STCUBA NY,	11768 PASEO GRANDE BLVD 4901FORT MYERS, FL 33912	MFA2	$524.34	$1,742.36	$2,266.70
09-45-25-P3-00200.4902	HEIN KENNETH D & REBECCA LC1969 RIVIERS D	11768 PASEO GRANDE BLVD 4902FORT MYERS, FL 33912	MFA2	$524.34	$1,742.36	$2,266.70
09-45-25-P3-00200.4903	AMORES IRIA V11768 PASEO GRANDE BLVD # 49	11768 PASEO GRANDE BLVD 4903FORT MYERS, FL 33912	MFA2	$524.34	$1,742.36	$2,266.70
09-45-25-P3-00200.4904	VDB WORLD LLC9528 VIA LAGO WAYFORT MYE	11768 PASEO GRANDE BLVD 4904FORT MYERS, FL 33912	MFA2	$524.34	$1,742.36	$2,266.70
09-45-25-P3-00200.4905	DELACRUZ MELISSA M11768 PASEO GRANDE BL	11768 PASEO GRANDE BLVD 4905FORT MYERS, FL 33912	MFA2	$524.34	$1,742.36	$2,266.70
09-45-25-P3-00200.5001	SCHMIDT DANIEL R II TRFOR DANIEL R SCHMID	11714 ADONCIA WAY 5001FORT MYERS, FL 33912	MFA2	$524.34	$1,742.36	$2,266.70
09-45-25-P3-00200.5002	LARRYMORE BRIEN + TONI7916 KINGS RIDGE C	11714 ADONCIA WAY 5002FORT MYERS, FL 33912	MFA2	$524.34	$1,742.36	$2,266.70
09-45-25-P3-00200.5003	WORNER ANDREA & DIEGUEZ OSCARPILAR 261	11714 ADONCIA WAY 5003FORT MYERS, FL 33912	MFA2	$524.34	$1,742.36	$2,266.70
09-45-25-P3-00200.5004	VEDVYAS VINOD & NEERU43 ELEANOR DRKEN	11714 ADONCIA WAY 5004FORT MYERS, FL 33912	MFA2	$524.34	$1,742.36	$2,266.70
09-45-25-P3-00200.5005	EMMITH DAVID & MARIA8 COLONIAL FORGE RI	11714 ADONCIA WAY 5005FORT MYERS, FL 33912	MFA2	$524.34	$1,742.36	$2,266.70
09-45-25-P3-00200.5006	COPLEY LINDA M11714 ADONCIA WAY #5006FOR	11714 ADONCIA WAY 5006FORT MYERS, FL 33912	MFA2	$524.34	$1,742.36	$2,266.70
09-45-25-P3-00200.5007	MICHELETTO RONALD A & JOY M966 SCOTTSDA	11714 ADONCIA WAY 5007FORT MYERS, FL 33912	MFA2	$524.34	$1,742.36	$2,266.70
09-45-25-P3-00200.5008	JOHNSON MARK P8500 W HAWTHORNE RDMEQ	11714 ADONCIA WAY 5008FORT MYERS, FL 33912	MFA2	$524.34	$1,742.36	$2,266.70
09-45-25-P3-00200.5009	BAHL ROBERT + BAHL KERRY1632 51ST ST S AP	11714 ADONCIA WAY 5009FORT MYERS, FL 33912	MFA2	$524.34	$1,742.36	$2,266.70
09-45-25-P3-00200.5010	GILL KYLE13650 FIDDLESTICKS BLVD #202FORT	11714 ADONCIA WAY 5010FORT MYERS, FL 33912	MFA2	$524.34	$1,742.36	$2,266.70

PASEO COMMUNITY DEVELOPMENT DISTRICT
2019 ASSESSMENT LIEN ROLL (UNIFORM METHOD)

STRAP	Owner	Site Address	LU	SERIES 2018 DEBT SERVICE	O&M	TOTAL
09-45-25-P3-00200.5011	PAYES KARLA B11714 ADONCIA WAY #5011FORT	11714 ADONCIA WAY 5011FORT MYERS, FL 33912	MFA2	$524.34	$1,742.36	$2,266.70
09-45-25-P3-00200.5012	ROBINSON SUSAN A & DAVID K3403 SNEAD PAT	11714 ADONCIA WAY 5012FORT MYERS, FL 33912	MFA2	$524.34	$1,742.36	$2,266.70
09-45-25-P3-00200.5101	EGGERT MICHAEL TODD & EGGERT DARLA RAE	11940 PALBA WAY 5101FORT MYERS, FL 33912	MFA2	$524.34	$1,742.36	$2,266.70
09-45-25-P3-00200.5102	BALDASSARRE MARK S & BALDASSARRE JOAN	11940 PALBA WAY 5102FORT MYERS, FL 33912	MFA2	$524.34	$1,742.36	$2,266.70
09-45-25-P3-00200.5103	WURST PAUL HENRY & CHERYL M11940 PALBA	11940 PALBA WAY 5103FORT MYERS, FL 33912	MFA2	$524.34	$1,742.36	$2,266.70
09-45-25-P3-00200.5104	COMMONS FRANK11940 PALBA WAY #5104FORT	11940 PALBA WAY 5104FORT MYERS, FL 33912	MFA2	$524.34	$1,742.36	$2,266.70
09-45-25-P3-00200.5105	BENEDETTO DANIEL & ANGELA107-38 87TH STC	11940 PALBA WAY 5105FORT MYERS, FL 33912	MFA2	$524.34	$1,742.36	$2,266.70
09-45-25-P3-00200.5106	KARNIK KEVIN T & CYNTHIA D11940 PALBA WA	11940 PALBA WAY 5106FORT MYERS, FL 33912	MFA2	$524.34	$1,742.36	$2,266.70
09-45-25-P3-00200.5201	ORNDOFF MICHAEL L +ORNDOFF SHARON A J/T	11220 PASEO GRANDE BLVD 5201FORT MYERS, FL 33912	MFA2	$524.34	$1,742.36	$2,266.70
09-45-25-P3-00200.5202	DETTMAN DENNIS D + ROBERTA A1206 CHARTW	11220 PASEO GRANDE BLVD 5202FORT MYERS, FL 33912	MFA2	$524.34	$1,742.36	$2,266.70
09-45-25-P3-00200.5203	KANE THOMAS E642 GULF STOLEAN NY, 14760	11220 PASEO GRANDE BLVD 5203FORT MYERS, FL 33912	MFA2	$524.34	$1,742.36	$2,266.70
09-45-25-P3-00200.5204	CERIO DANIEL A TR +CERIO MARY J TRFOR CER	11220 PASEO GRANDE BLVD 5204FORT MYERS, FL 33912	MFA2	$524.34	$1,742.36	$2,266.70
09-45-25-P3-00200.5205	ZIZKA GLEN M +ZIZKA GERDA J/TPO BOX 128IN	11220 PASEO GRANDE BLVD 5205FORT MYERS, FL 33912	MFA2	$524.34	$1,742.36	$2,266.70
09-45-25-P3-00200.5206	LITTLE LEIGH A5 HYANIS CTMOUNT SINAI NY, 1	11220 PASEO GRANDE BLVD 5206FORT MYERS, FL 33912	MFA2	$524.34	$1,742.36	$2,266.70
09-45-25-P3-00200.5207	VOSS DAVID C & KIMBERLY M TRFOR VOSS HO	11220 PASEO GRANDE BLVD 5207FORT MYERS, FL 33912	MFA2	$524.34	$1,742.36	$2,266.70
09-45-25-P3-00200.5208	PIERCE DEBORAH DENYSE11220 PASEO GRAND	11220 PASEO GRANDE BLVD 5208FORT MYERS, FL 33912	MFA1	$524.34	$1,742.36	$2,266.70
09-45-25-P3-00200.5209	DINDIAL JOYCE +DINDIAL ASHLEY7 WILLIAMS S	11220 PASEO GRANDE BLVD 5209FORT MYERS, FL 33912	MFA1	$524.34	$1,742.36	$2,266.70
09-45-25-P3-00200.5210	THOMAS KATHLEEN AUNIT 521011220 PASEO GR	11220 PASEO GRANDE BLVD 5210FORT MYERS, FL 33912	MFA1	$524.34	$1,742.36	$2,266.70
09-45-25-P3-00200.5211	FORREST JO ANNA + CHARLES D5547 S PALATIN	11220 PASEO GRANDE BLVD 5211FORT MYERS, FL 33912	MFA2	$524.34	$1,742.36	$2,266.70
09-45-25-P3-00200.5212	RANCK JEREMIAH DAVID11220 PASEO GRANDE	11220 PASEO GRANDE BLVD 5212FORT MYERS, FL 33912	MFA1	$524.34	$1,742.36	$2,266.70
09-45-25-P3-00200.5301	KETTERER SCOTT + HOLLY S1523 N RIDGE RDPE	11238 PASEO GRANDE BLVD 5301FORT MYERS, FL 33912	MFA2	$524.34	$1,742.36	$2,266.70
09-45-25-P3-00200.5302	KAHUT TERESA ELLEN TRFOR TERESA ELLEN K	11238 PASEO GRANDE BLVD 5302FORT MYERS, FL 33912	MFA1	$524.34	$1,742.36	$2,266.70
09-45-25-P3-00200.5303	MARCUCCI JOSEPH J JR +MARCUCCI ANITA J/T8	11238 PASEO GRANDE BLVD 5303FORT MYERS, FL 33912	MFA2	$524.34	$1,742.36	$2,266.70
09-45-25-P3-00200.5304	HOME 2 HOME REALTY LLC112 RADFORD CTST	11238 PASEO GRANDE BLVD 5304FORT MYERS, FL 33912	MFA2	$524.34	$1,742.36	$2,266.70
09-45-25-P3-00200.5305	JOHNSTONE KENNETH P + KAREN M60 OAK PAR	11238 PASEO GRANDE BLVD 5305FORT MYERS, FL 33912	MFA2	$524.34	$1,742.36	$2,266.70
09-45-25-P3-00200.5401	BROWN CYNTHIA ANNE11894 PALBA WAY #5401	11894 PALBA WAY 5401FORT MYERS, FL 33912	MFA2	$524.34	$1,742.36	$2,266.70
09-45-25-P3-00200.5402	KELLER CAROL L 11894 PALBA WAY #5402FORT	11894 PALBA WAY 5402FORT MYERS, FL 33912	MFA2	$524.34	$1,742.36	$2,266.70
09-45-25-P3-00200.5403	PANGER MARIE H TRFOR MARIE H PANGER TRU	11894 PALBA WAY 5403FORT MYERS, FL 33912	MFA2	$524.34	$1,742.36	$2,266.70
09-45-25-P3-00200.5404	RADER MITCH & DIANE + RADER NICOLE11894	11894 PALBA WAY 5404FORT MYERS, FL 33912	MFA2	$524.34	$1,742.36	$2,266.70
09-45-25-P3-00200.5405	SCHANZENBACH SCOTT A + HALENAR LORI A11	11894 PALBA WAY 5405FORT MYERS, FL 33912	MFA2	$524.34	$1,742.36	$2,266.70
09-45-25-P3-00200.5501	REITMEIER KEVIN P TR +REITMEIER JUDY K TR	11256 PASEO GRANDE BLVD 5501FORT MYERS, FL 33912	MFA2	$524.34	$1,742.36	$2,266.70
09-45-25-P3-00200.5502	GARDNER KENT J & MICHELLE M400 SENTINEL	11256 PASEO GRANDE BLVD 5502FORT MYERS, FL 33912	MFA1	$524.34	$1,742.36	$2,266.70
09-45-25-P3-00200.5503	VANDERWERF MARY ANN TRFOR MARY ANN VA	11256 PASEO GRANDE BLVD 5503FORT MYERS, FL 33912	MFA2	$524.34	$1,742.36	$2,266.70
09-45-25-P3-00200.5504	NOVOKOWSKY CRAIG + LYNN2129 CHATSWORT	11256 PASEO GRANDE BLVD 5504FORT MYERS, FL 33912	MFA1	$524.34	$1,742.36	$2,266.70
09-45-25-P3-00200.5505	ROYAL KIMBERLY B11256 PASEO GRANDE BLVD	11256 PASEO GRANDE BLVD 5505FORT MYERS, FL 33912	MFA2	$524.34	$1,742.36	$2,266.70
09-45-25-P3-00200.5601	LIS MICHAEL11872 PALBA WAY # 5601FORT MYE	11872 PALBA WAY 5601FORT MYERS, FL 33912	MFA2	$524.34	$1,742.36	$2,266.70
09-45-25-P3-00200.5602	THOMPSON LISA M + HEIMAN MATTHEW J ET A	11872 PALBA WAY 5602FORT MYERS, FL 33912	MFA2	$524.34	$1,742.36	$2,266.70
09-45-25-P3-00200.5603	SLAUGHTER SAMUEL T + SLAUGHTER CATHERI	11872 PALBA WAY 5603FORT MYERS, FL 33912	MFA2	$524.34	$1,742.36	$2,266.70
09-45-25-P3-00200.5604	STOPFER PETER T TR +STOPFER LISA L TRFOR P	11872 PALBA WAY 5604FORT MYERS, FL 33912	MFA2	$524.34	$1,742.36	$2,266.70
09-45-25-P3-00200.5605	BRETT TERESA MARIE11872 PALBA WAY#5605FO	11872 PALBA WAY 5605FORT MYERS, FL 33912	MFA2	$524.34	$1,742.36	$2,266.70
09-45-25-P3-00200.5701	SHEEHAN KEVIN A + GAILE M11272 PASEO GRA	11272 PASEO GRANDE BLVD 5701FORT MYERS, FL 33912	MFA2	$524.34	$1,742.36	$2,266.70
09-45-25-P3-00200.5702	HAYDEN STEPHEN + JOYCE2791 DOUBLE EAGL	11272 PASEO GRANDE BLVD 5702FORT MYERS, FL 33912	MFA2	$524.34	$1,742.36	$2,266.70
09-45-25-P3-00200.5703	GM REAL ESTATE PROPERTIES LLC32W956 HON	11272 PASEO GRANDE BLVD 5703FORT MYERS, FL 33912	MFA2	$524.34	$1,742.36	$2,266.70
09-45-25-P3-00200.5704	KEANE DENNIS V144B HERTIAGE VILLAGESOUT	11272 PASEO GRANDE BLVD 5704FORT MYERS, FL 33912	MFA2	$524.34	$1,742.36	$2,266.70
09-45-25-P3-00200.5705	COURTRIGHT DEBRA B + MCQUEENEY EILEEN1	11272 PASEO GRANDE BLVD 5705FORT MYERS, FL 33912	MFA2	$524.34	$1,742.36	$2,266.70
09-45-25-P3-00200.5706	GOPALAKRISHNAN VENKATARAMAN1107 PRIN	11272 PASEO GRANDE BLVD 5706FORT MYERS, FL 33912	MFA2	$524.34	$1,742.36	$2,266.70
09-45-25-P3-00200.5707	ADVANTAIRA TRUST LLCFOR DOUGLAS W BUC	11272 PASEO GRANDE BLVD 5707FORT MYERS, FL 33912	MFA2	$524.34	$1,742.36	$2,266.70
09-45-25-P3-00200.5708	BHAVNANI VINOD DHARAMRAJ9528 VIA LAGO	11272 PASEO GRANDE BLVD 5708FORT MYERS, FL 33912	MFA2	$524.34	$1,742.36	$2,266.70
09-45-25-P3-00200.5709	AOUCHICHE RACHID + KIM414 LIGHT ST APT 80	11272 PASEO GRANDE BLVD 5709FORT MYERS, FL 33912	MFA2	$524.34	$1,742.36	$2,266.70
09-45-25-P3-00200.5710	HERNANDEZ PAUL E11272 PASEO GRANDE BLVD	11272 PASEO GRANDE BLVD 5710FORT MYERS, FL 33912	MFA2	$524.34	$1,742.36	$2,266.70
09-45-25-P3-00200.5711	MOON MATTHEW J + MEREDITH L26495 W RIVE	11272 PASEO GRANDE BLVD 5711FORT MYERS, FL 33912	MFA2	$524.34	$1,742.36	$2,266.70
09-45-25-P3-00200.5712	JOE MARE LLC16 WIMBLEDON WAYMARLTON N	11272 PASEO GRANDE BLVD 5712FORT MYERS, FL 33912	MFA2	$524.34	$1,742.36	$2,266.70
09-45-25-P3-00200.5801	SCHULE DAVID + PATRICIAAPT 580111296 PASEO	11296 PASEO GRANDE BLVD 5801FORT MYERS, FL 33912	MFA2	$524.34	$1,742.36	$2,266.70
09-45-25-P3-00200.5802	WORTHINGTON ROBERT E TRFOR ROBERT E WO	11296 PASEO GRANDE BLVD 5802FORT MYERS, FL 33912	MFA2	$524.34	$1,742.36	$2,266.70

PASEO COMMUNITY DEVELOPMENT DISTRICT
2019 ASSESSMENT LIEN ROLL (UNIFORM METHOD)

STRAP	Owner	Site Address	LU	SERIES 2018 DEBT SERVICE	O&M	TOTAL
09-45-25-P3-00200.5803	STARK MICHAEL +PETERSEN DAVID103 ARGYLE	11296 PASEO GRANDE BLVD 5803FORT MYERS, FL 33912	MFA2	$524.34	$1,742.36	$2,266.70
09-45-25-P3-00200.5804	BENNETT JOHN ROLAND + BENNETT AUDREY L	11296 PASEO GRANDE BLVD 5804FORT MYERS, FL 33912	MFA2	$524.34	$1,742.36	$2,266.70
09-45-25-P3-00200.5805	BOESEN MICHAEL R +CHARLES CHERIE D H/W1	11296 PASEO GRANDE BLVD 5805FORT MYERS, FL 33912	MFA2	$524.34	$1,742.36	$2,266.70
09-45-25-P3-00200.5806	SPOSATO JEREMY2311 SANTA BARBARA BLVD #	11296 PASEO GRANDE BLVD 5806FORT MYERS, FL 33912	MFA2	$524.34	$1,742.36	$2,266.70
09-45-25-P3-00200.5807	BARONE PATRICIA J + HARTFORD JAMES P112961	11296 PASEO GRANDE BLVD 5807FORT MYERS, FL 33912	MFA2	$524.34	$1,742.36	$2,266.70
09-45-25-P3-00200.5808	MOODY JANIS MOSES11296 PASEO GRANDE BLV	11296 PASEO GRANDE BLVD 5808FORT MYERS, FL 33912	MFA2	$524.34	$1,742.36	$2,266.70
09-45-25-P3-00200.5809	NINKE ARDIS EUNICE44677 OLD HIGHWAY 6OUT	11296 PASEO GRANDE BLVD 5809FORT MYERS, FL 33912	MFA2	$524.34	$1,742.36	$2,266.70
09-45-25-P3-00200.5810	REVIS GEORGE SCOTT TRFOR REVIS FAMILY RE	11296 PASEO GRANDE BLVD 5810FORT MYERS, FL 33912	MFA2	$524.34	$1,742.36	$2,266.70
09-45-25-P3-00200.5811	NADERMANN TONY M 1/2 + NADERMANN TERR	11296 PASEO GRANDE BLVD 5811FORT MYERS, FL 33912	MFA2	$524.34	$1,742.36	$2,266.70
09-45-25-P3-00200.5812	AVINA YVONNE M TRFOR YVONNE M AVINA TR	11296 PASEO GRANDE BLVD 5812FORT MYERS, FL 33912	MFA2	$524.34	$1,742.36	$2,266.70
09-45-25-P3-00200.5901	WALKER RENEE11318 PASEO GRANDE BLVD #59	11318 PASEO GRANDE BLVD 5901FORT MYERS, FL 33912	MFA2	$524.34	$1,742.36	$2,266.70
09-45-25-P3-00200.5902	VDB UNIVERSE LLC9528 VIA LAGO WAYFORT M	11318 PASEO GRANDE BLVD 5902FORT MYERS, FL 33912	MFA2	$524.34	$1,742.36	$2,266.70
09-45-25-P3-00200.5903	KARIMI ASSAD + LYNNE J2636 WAKELY RDCOOK	11318 PASEO GRANDE BLVD 5903FORT MYERS, FL 33912	MFA2	$524.34	$1,742.36	$2,266.70
09-45-25-P3-00200.5904	TORO ELMER F12909 KINGSMILL WAYFORT MYE	11318 PASEO GRANDE BLVD 5904FORT MYERS, FL 33912	MFA2	$524.34	$1,742.36	$2,266.70
09-45-25-P3-00200.5905	YKM LLC4001 TAMIAMI TRAIL N STE 300NAPLES	11318 PASEO GRANDE BLVD 5905FORT MYERS, FL 33912	MFA2	$524.34	$1,742.36	$2,266.70
09-45-25-P3-00200.6001	UNRUH DANIEL M TRFOR UNRUH FAMILY TRUS	11766 PALBA WAY 6001FORT MYERS, FL 33912	MFA2	$524.34	$1,742.36	$2,266.70
09-45-25-P3-00200.6002	MCDAGA REALTY LLC4 HERRICK DRIPSWICH M	11766 PALBA WAY 6002FORT MYERS, FL 33912	MFA2	$524.34	$1,742.36	$2,266.70
09-45-25-P3-00200.6003	LUTSKY HERBERT + BARBARA11766 PALBA WAY	11766 PALBA WAY 6003FORT MYERS, FL 33912	MFA2	$524.34	$1,742.36	$2,266.70
09-45-25-P3-00200.6004	BARTH ROBERT G TRFOR BARTH TRUST11766 PA	11766 PALBA WAY 6004FORT MYERS, FL 33912	MFA2	$524.34	$1,742.36	$2,266.70
09-45-25-P3-00200.6005	BOSWELL SALLY ANN11766 PALBA WAY #6005FO	11766 PALBA WAY 6005FORT MYERS, FL 33912	MFA2	$524.34	$1,742.36	$2,266.70
09-45-25-P3-00200.6101	LAMBREV IVO11711 IZARRA WAY#6101FORT MY	11711 IZARRA WAY 6101FORT MYERS, FL 33912	MFA2	$524.34	$1,742.36	$2,266.70
09-45-25-P3-00200.6102	DAVIS IAN LANE30 VINE STANDOVER MA, 01810	11711 IZARRA WAY 6102FORT MYERS, FL 33912	MFA2	$524.34	$1,742.36	$2,266.70
09-45-25-P3-00200.6103	DAVIS IAN LANE30 VINE STANDOVER MA, 01810	11711 IZARRA WAY 6103FORT MYERS, FL 33912	MFA2	$524.34	$1,742.36	$2,266.70
09-45-25-P3-00200.6104	VAN KLEEF DANIEL39 BONAVENTURE DRHAMIL	11711 IZARRA WAY 6104FORT MYERS, FL 33912	MFA2	$524.34	$1,742.36	$2,266.70
09-45-25-P3-00200.6105	HALKER GARY & MCCARTHY MAUREENPO BOX	11711 IZARRA WAY 6105FORT MYERS, FL 33912	MFA2	$524.34	$1,742.36	$2,266.70
09-45-25-P3-00200.6106	SHINGLETON KRISTIAN A11711 IZARRA WAY #61	11711 IZARRA WAY 6106FORT MYERS, FL 33912	MFA2	$524.34	$1,742.36	$2,266.70
09-45-25-P3-00200.6107	NORTHRUP CHRISTA N11711 IZARRA WAY #6107	11711 IZARRA WAY 6107FORT MYERS, FL 33912	MFA2	$524.34	$1,742.36	$2,266.70
09-45-25-P3-00200.6108	BUNNELLE WILLIAM L & BUNNELLE SARAH S16	11711 IZARRA WAY 6108FORT MYERS, FL 33912	MFA2	$524.34	$1,742.36	$2,266.70
09-45-25-P3-00200.6109	GUPTA ARUNA J & SUSHIL K15211 CRYSTAL SPR	11711 IZARRA WAY 6109FORT MYERS, FL 33912	MFA2	$524.34	$1,742.36	$2,266.70
09-45-25-P3-00200.6110	LOMBARDI MATTHEW & CYNTHIA11711 IZARRA	11711 IZARRA WAY 6110FORT MYERS, FL 33912	MFA2	$524.34	$1,742.36	$2,266.70
09-45-25-P3-00200.6111	WALLER ANTHONY J11711 IZARRA WAY #6111FO	11711 IZARRA WAY 6111FORT MYERS, FL 33912	MFA2	$524.34	$1,742.36	$2,266.70
09-45-25-P3-00200.6112	WOLFF KEVIN M & KATHLEEN C3415 RAMSGATE	11711 IZARRA WAY 6112FORT MYERS, FL 33912	MFA2	$524.34	$1,742.36	$2,266.70
09-45-25-P3-00200.6201	LALIBERTE JEAN-GUY & BLANCHETTE SONIA36	11959 PALBA WAY 6201FORT MYERS, FL 33912	MFA1	$524.34	$1,742.36	$2,266.70
09-45-25-P3-00200.6202	MATTIACIO NANCY + ANTHONY 1 TEA OLIVE LN	11959 PALBA WAY 6202FORT MYERS, FL 33912	MFA1	$524.34	$1,742.36	$2,266.70
09-45-25-P3-00200.6203	ELLIS RAYMOND D + EILEEN11959 PALBA WAY #	11959 PALBA WAY 6203FORT MYERS, FL 33912	MFA1	$524.34	$1,742.36	$2,266.70
09-45-25-P3-00200.6204	PURNELL MICHAEL H + SHARON TRFOR MICHAE	11959 PALBA WAY 6204FORT MYERS, FL 33912	MFA1	$524.34	$1,742.36	$2,266.70
09-45-25-P3-00200.6301	TOY SAM +RICE ALEXANDRA J/T408 ROUTE 22 U	11973 PALBA WAY 6301FORT MYERS, FL 33912	MFA1	$524.34	$1,742.36	$2,266.70
09-45-25-P3-00200.6302	COBB CLAYTON W & COBB STEPHANIE A11973 P	11973 PALBA WAY 6302FORT MYERS, FL 33912	MFA1	$524.34	$1,742.36	$2,266.70
09-45-25-P3-00200.6303	GM REAL ESTATE PROPERTIES LLC32W956 HONI	11973 PALBA WAY 6303FORT MYERS, FL 33912	MFA1	$524.34	$1,742.36	$2,266.70
09-45-25-P3-00200.6304	FIORELLA CHRISTOPHER & & FIORELLA ANITA1	11973 PALBA WAY 6304FORT MYERS, FL 33912	MFA1	$524.34	$1,742.36	$2,266.70
09-45-25-P3-00200.6305	SIMMONS RUTH CURRY11973 PALBA WAY # 6305	11973 PALBA WAY 6305FORT MYERS, FL 33912	MFA1	$524.34	$1,742.36	$2,266.70
09-45-25-P3-00200.6306	ZINCK TERRY G & SANDRA JPO BOX 419BARRIN	11973 PALBA WAY 6306FORT MYERS, FL 33912	MFA1	$524.34	$1,742.36	$2,266.70
09-45-25-P3-00200.6401	JOHNSON RONALD + LIETTE J11999 PALBA WAY#	11999 PALBA WAY 6401FORT MYERS, FL 33912	MFA1	$524.34	$1,742.36	$2,266.70
09-45-25-P3-00200.6402	BRADDOCK EDGAR H JR11999 PALBA WAY #6402	11999 PALBA WAY 6402FORT MYERS, FL 33912	MFA1	$524.34	$1,742.36	$2,266.70
09-45-25-P3-00200.6403	RANDY C DARBY REV LIVING TRUST11200 HERO	11999 PALBA WAY 6403FORT MYERS, FL 33912	MFA1	$524.34	$1,742.36	$2,266.70
09-45-25-P3-00200.6404	PALERMO PAUL M + PALERMO JOAN A & CARL E	11999 PALBA WAY 6404FORT MYERS, FL 33912	MFA1	$524.34	$1,742.36	$2,266.70
09-45-25-P3-00200.6405	SCHEFFLER EDWARD C SR + ANN B1022 HANCO	11999 PALBA WAY 6405FORT MYERS, FL 33912	MFA1	$524.34	$1,742.36	$2,266.70
09-45-25-P3-00200.6406	CHINERY MICHAEL + CYNTHIA27 WARWICK RD	11999 PALBA WAY 6406FORT MYERS, FL 33912	MFA1	$524.34	$1,742.36	$2,266.70
09-45-25-P3-00200.6501	FEGAN LYNNE ANNE TRFOR VILLA SOUTH TRUS	11937 PALBA WAY 6501FORT MYERS, FL 33912	MFA2	$524.34	$1,742.36	$2,266.70
09-45-25-P3-00200.6502	AGASSI ANTOINE A810 SHADOWSTONE PLNASH	11937 PALBA WAY 6502FORT MYERS, FL 33912	MFA2	$524.34	$1,742.36	$2,266.70
09-45-25-P3-00200.6503	CHRISTIANO RONALD A + DEBRA A4 HYACINTH	11937 PALBA WAY 6503FORT MYERS, FL 33912	MFA2	$524.34	$1,742.36	$2,266.70
09-45-25-P3-00200.6504	RICHARDSON RODNEY K & PRETELIN KELLY CO	11937 PALBA WAY 6504FORT MYERS, FL 33912	MFA1	$524.34	$1,742.36	$2,266.70
09-45-25-P3-00200.6505	KUSER JAMIE K + KATHLEEN M11937 PALBA WA	11937 PALBA WAY 6505FORT MYERS, FL 33912	MFA1	$524.34	$1,742.36	$2,266.70
09-45-25-P3-00200.6506	JOYCE WILLIAM & JOYCE LESLIE BENAVIDES11	11937 PALBA WAY 6506FORT MYERS, FL 33912	MFA2	$524.34	$1,742.36	$2,266.70

PASEO COMMUNITY DEVELOPMENT DISTRICT
2019 ASSESSMENT LIEN ROLL (UNIFORM METHOD)

STRAP	Owner	Site Address	LU	SERIES 2018 DEBT SERVICE	O&M	TOTAL
09-45-25-P3-00200.6601	WILKINS BRADY W15714 CREEKVIEW DRPLAINI	11936 IZARRA WAY 6601FORT MYERS, FL 33912	MFA1	$524.34	$1,742.36	$2,266.70
09-45-25-P3-00200.6602	MCFETRIDGE PATRICK +KARKOUTI VERITA J/T3	11936 IZARRA WAY 6602FORT MYERS, FL 33912	MFA1	$524.34	$1,742.36	$2,266.70
09-45-25-P3-00200.6603	CROSS BRIAN N & BARBETTE3782 SPERONE DR	11936 IZARRA WAY 6603FORT MYERS, FL 33912	MFA1	$524.34	$1,742.36	$2,266.70
09-45-25-P3-00200.6604	HUNTOON LARRY R + HUNTOON SHEREE A2199	11936 IZARRA WAY 6604FORT MYERS, FL 33912	MFA1	$524.34	$1,742.36	$2,266.70
09-45-25-P3-00200.6605	COOK GEORGE W + PATRICIA A11936 IZARRA WA	11936 IZARRA WAY 6605FORT MYERS, FL 33912	MFA1	$524.34	$1,742.36	$2,266.70
09-45-25-P3-00200.6606	BLOSS BRADLEY HENRY & BLOSS PENNY JO119	11936 IZARRA WAY 6606FORT MYERS, FL 33912	MFA1	$524.34	$1,742.36	$2,266.70
09-45-25-P3-00200.6607	DONEHOO TOM410 INDEPENDENCE LNFREEDOI	11936 IZARRA WAY 6607FORT MYERS, FL 33912	MFA2	$524.34	$1,742.36	$2,266.70
09-45-25-P3-00200.6608	PALETSKY FAULLIN11936 IZARRA WAY # 6608FO	11936 IZARRA WAY 6608FORT MYERS, FL 33912	MFA1	$524.34	$1,742.36	$2,266.70
09-45-25-P3-00200.6701	PALCHAUDHURI MONU11919 PALBA WAY # 6701	11919 PALBA WAY 6701FORT MYERS, FL 33912	MFA2	$524.34	$1,742.36	$2,266.70
09-45-25-P3-00200.6702	MULLARKEY JOHN + DENISE11919 PALBA WAY #	11919 PALBA WAY 6702FORT MYERS, FL 33912	MFA2	$524.34	$1,742.36	$2,266.70
09-45-25-P3-00200.6703	VIGNALI CALASSO MARIO +MUNOZ DE VIGNAL	11919 PALBA WAY 6703FORT MYERS, FL 33912	MFA2	$524.34	$1,742.36	$2,266.70
09-45-25-P3-00200.6704	SIMON JOSEPH & CONCETTA + SIMON JOSEPH JI	11919 PALBA WAY 6704FORT MYERS, FL 33912	MFA2	$524.34	$1,742.36	$2,266.70
09-45-25-P3-00200.6705	PARADISE RENTALS LLC 11919 PALBA WAY #670	11919 PALBA WAY 6705FORT MYERS, FL 33912	MFA2	$524.34	$1,742.36	$2,266.70
09-45-25-P3-00200.6706	TURCOTTE RAYMOND & LIZA L1568 VICTORY H	11919 PALBA WAY 6706FORT MYERS, FL 33912	MFA2	$524.34	$1,742.36	$2,266.70
09-45-25-P3-00200.6801	QUINTUS EARL W + DONNA L11920 IZARRA WAY	11920 IZARRA WAY 6801FORT MYERS, FL 33912	MFA2	$524.34	$1,742.36	$2,266.70
09-45-25-P3-00200.6802	PAREDES ROBERTO C11612 RIVERSTONE LNFOR	11920 IZARRA WAY 6802FORT MYERS, FL 33912	MFA2	$524.34	$1,742.36	$2,266.70
09-45-25-P3-00200.6803	COSTELLO JAMES & PATRICIA9088 CHARDONNA	11920 IZARRA WAY 6803FORT MYERS, FL 33912	MFA2	$524.34	$1,742.36	$2,266.70
09-45-25-P3-00200.6804	LUNA JAMES +LUNA JONAS +PEREZ-LUNA YADI	11920 IZARRA WAY 6804FORT MYERS, FL 33912	MFA2	$524.34	$1,742.36	$2,266.70
09-45-25-P3-00200.6805	OLIVER ROBERT + SANDRA11920 IZARRA WAY #	11920 IZARRA WAY 6805FORT MYERS, FL 33912	MFA2	$524.34	$1,742.36	$2,266.70
09-45-25-P3-00200.6806	GUBITOSE CHARLES R TRFOR GUBITOSE FAMIL	11920 IZARRA WAY 6806FORT MYERS, FL 33912	MFA2	$524.34	$1,742.36	$2,266.70
09-45-25-P3-00200.6901	NEILSON DIANE M TRFOR JEFFREY B + DIANE M	11907 PALBA WAY 6901FORT MYERS, FL 33912	MFA2	$524.34	$1,742.36	$2,266.70
09-45-25-P3-00200.6902	FINDLEY HAROLD J + NANCY L11907 PALBA WAY	11907 PALBA WAY 6902FORT MYERS, FL 33912	MFA2	$524.34	$1,742.36	$2,266.70
09-45-25-P3-00200.6903	BENN STEPHEN G + SARAH MPO BOX 398NEW D	11907 PALBA WAY 6903FORT MYERS, FL 33912	MFA2	$524.34	$1,742.36	$2,266.70
09-45-25-P3-00200.6904	OLIVE JERRY S1109 N OAKLEY LNWESTMONT IL	11907 PALBA WAY 6904FORT MYERS, FL 33912	MFA2	$524.34	$1,742.36	$2,266.70
09-45-25-P3-00200.6905	LOZADA JENNIFER11907 PALBA WAY # 6905FORT	11907 PALBA WAY 6905FORT MYERS, FL 33912	MFA2	$524.34	$1,742.36	$2,266.70
09-45-25-P3-00200.6906	JULOW JACLYN C11907 PALBA WAY # 6906FORT M	11907 PALBA WAY 6906FORT MYERS, FL 33912	MFA2	$524.34	$1,742.36	$2,266.70
09-45-25-P3-00200.7001	SUAREZ ERNESTO4849 206TH STBAYSIDE NY, 11	11908 IZARRA WAY 7001FORT MYERS, FL 33912	MFA2	$524.34	$1,742.36	$2,266.70
09-45-25-P3-00200.7002	HIGGINSON IAN MICHAEL14750 MAHOE CTFORT	11908 IZARRA WAY 7002FORT MYERS, FL 33912	MFA2	$524.34	$1,742.36	$2,266.70
09-45-25-P3-00200.7003	MORELOCK DOLORES J625 W ALKALINE SPRING	11908 IZARRA WAY 7003FORT MYERS, FL 33912	MFA2	$524.34	$1,742.36	$2,266.70
09-45-25-P3-00200.7004	ZAGER WILBERT S + PAULA11908 IZARRA WAY #	11908 IZARRA WAY 7004FORT MYERS, FL 33912	MFA2	$524.34	$1,742.36	$2,266.70
09-45-25-P3-00200.7005	RONSHAWN LLC8780 PASEO DE VALENCIA STFO	11908 IZARRA WAY 7005FORT MYERS, FL 33912	MFA2	$524.34	$1,742.36	$2,266.70
09-45-25-P3-00200.7006	EDGAR DAVID A100 7TH ST APT 901PITTSBURGH	11908 IZARRA WAY 7006FORT MYERS, FL 33912	MFA2	$524.34	$1,742.36	$2,266.70
09-45-25-P3-00200.7101	WENDEL CHARLENE + MARTINSEN SUZANNE11	11863 PALBA WAY 7101FORT MYERS, FL 33912	MFA2	$524.34	$1,742.36	$2,266.70
09-45-25-P3-00200.7102	KAABER DEBRA L + KENNEDY BRIAN T20412 MA	11863 PALBA WAY 7102FORT MYERS, FL 33912	MFA2	$524.34	$1,742.36	$2,266.70
09-45-25-P3-00200.7103	SCHNEIDER MICHAEL S11863 PALBA WAY #7103I	11863 PALBA WAY 7103FORT MYERS, FL 33912	MFA2	$524.34	$1,742.36	$2,266.70
09-45-25-P3-00200.7104	FLOCK GREGORY C + MARY E28 STONEHEDGE V	11863 PALBA WAY 7104FORT MYERS, FL 33912	MFA2	$524.34	$1,742.36	$2,266.70
09-45-25-P3-00200.7105	BOLTREK WILLIAM III11863 PALBA WAY APT 710	11863 PALBA WAY 7105FORT MYERS, FL 33912	MFA2	$524.34	$1,742.36	$2,266.70
09-45-25-P3-00200.7106	SMITH ROBERT B TRFOR R BRUCE SMITH REVO	11863 PALBA WAY 7106FORT MYERS, FL 33912	MFA2	$524.34	$1,742.36	$2,266.70
09-45-25-P3-00200.7201	WALLACE DARRIN + KIMBERLY11864 IZARRA W	11864 IZARRA WAY 7201FORT MYERS, FL 33912	MFA2	$524.34	$1,742.36	$2,266.70
09-45-25-P3-00200.7202	PROVENZANO ALBERT + GAIL2232 CLEVELAN D	11864 IZARRA WAY 7202FORT MYERS, FL 33912	MFA2	$524.34	$1,742.36	$2,266.70
09-45-25-P3-00200.7203	GRAY DANIEL J + GRAY YANELIS L11864 IZARRA	11864 IZARRA WAY 7203FORT MYERS, FL 33912	MFA2	$524.34	$1,742.36	$2,266.70
09-45-25-P3-00200.7204	OAKES MARY ANN +OAKES DEBORAH ANN J/T1	11864 IZARRA WAY 7204FORT MYERS, FL 33912	MFA2	$0.00	$1,742.36	$1,742.36
09-45-25-P3-00200.7205	BRANDT RICHARD E & JANICE A2575 CHURCHIL	11864 IZARRA WAY 7205FORT MYERS, FL 33912	MFA2	$524.34	$1,742.36	$2,266.70
09-45-25-P3-00200.7206	LOGAN DEAN A & FICCA-LOGAN GINA E841 HIGH	11864 IZARRA WAY 7206FORT MYERS, FL 33912	MFA2	$524.34	$1,742.36	$2,266.70
09-45-25-P3-00200.7301	NADERMANN TONY MICHAEL & NADERMANN I	11845 PALBA WAY 7301FORT MYERS, FL 33912	MFA2	$524.34	$1,742.36	$2,266.70
09-45-25-P3-00200.7302	REYES ANDRES11845 PALBA WAY # 7302FORT M	11845 PALBA WAY 7302FORT MYERS, FL 33912	MFA2	$524.34	$1,742.36	$2,266.70
09-45-25-P3-00200.7303	FLYNN EDWARD J + IRENE519 BARRETT AVEATL	11845 PALBA WAY 7303FORT MYERS, FL 33912	MFA2	$524.34	$1,742.36	$2,266.70
09-45-25-P3-00200.7304	VANDERWALL RICHARD + KAREN22 MYRTLE AV	11845 PALBA WAY 7304FORT MYERS, FL 33912	MFA2	$524.34	$1,742.36	$2,266.70
09-45-25-P3-00200.7305	MUENCH KENT + CARRIE +JLABERT AARON + C	11845 PALBA WAY 7305FORT MYERS, FL 33912	MFA2	$524.34	$1,742.36	$2,266.70
09-45-25-P3-00200.7306	HITZ HEATHER11845 PALBA WAY #7306 FORT MY	11845 PALBA WAY 7306FORT MYERS, FL 33912	MFA2	$524.34	$1,742.36	$2,266.70
09-45-25-P3-00200.7401	GRAFF W CURTIS + GRAFF NANCY K11846 IZARR	11846 IZARRA WAY 7401FORT MYERS, FL 33912	MFA2	$524.34	$1,742.36	$2,266.70
09-45-25-P3-00200.7402	HARMATY JAMES N11846 IZARRA WAY #7402FOR	11846 IZARRA WAY 7402FORT MYERS, FL 33912	MFA2	$524.34	$1,742.36	$2,266.70
09-45-25-P3-00200.7403	JANOVYAK RICHARD J + PAMELA R13912 CHICA	11846 IZARRA WAY 7403FORT MYERS, FL 33912	MFA2	$524.34	$1,742.36	$2,266.70
09-45-25-P3-00200.7404	JOHNSTON RICHARD P11846 IZARRA WAY #7404	11846 IZARRA WAY 7404FORT MYERS, FL 33912	MFA2	$524.34	$1,742.36	$2,266.70

PASEO COMMUNITY DEVELOPMENT DISTRICT
2019 ASSESSMENT LIEN ROLL (UNIFORM METHOD)

STRAP	Owner	Site Address	LU	SERIES 2018 DEBT SERVICE	O&M	TOTAL
09-45-25-P3-00200.7405	KELTNER JASON RADFORD & KELTNER MICHEL	11846 IZARRA WAY 7405FORT MYERS, FL 33912	MFA2	$524.34	$1,742.36	$2,266.70
09-45-25-P3-00200.7406	RIOS YOLANDA1620 RUGBY RDEAST MEADOW	11846 IZARRA WAY 7406FORT MYERS, FL 33912	MFA2	$524.34	$1,742.36	$2,266.70
09-45-25-P3-00200.7501	SS BOWMAN INVESTMENTS LLC972 WYNDHAM	8663 OLINDA WAY 7501FORT MYERS, FL 33912	MFA2	$524.34	$1,742.36	$2,266.70
09-45-25-P3-00200.7502	LAMONICA MATTHEW E + JILLIAN141 TITLEIST	8663 OLINDA WAY 7502FORT MYERS, FL 33912	MFA2	$524.34	$1,742.36	$2,266.70
09-45-25-P3-00200.7503	STOCK DEVELOPMENT LLC2639 PROFESSIONAL	8663 OLINDA WAY 7503FORT MYERS, FL 33912	MFA2	$524.34	$1,742.36	$2,266.70
09-45-25-P3-00200.7504	CALLOZZO PHILLIP A & CALLOZZO CHRISTINE8	8663 OLINDA WAY 7504FORT MYERS, FL 33912	MFA2	$524.34	$1,742.36	$2,266.70
09-45-25-P3-00200.7505	TOWNLEY CHERYL A201-1941 QUEEN ST EASTT	8663 OLINDA WAY 7505FORT MYERS, FL 33912	MFA2	$524.34	$1,742.36	$2,266.70
09-45-25-P3-00200.7506	LYNCH EVELYN C + HILLMAN KATHLEEN S11948	8663 OLINDA WAY 7506FORT MYERS, FL 33912	MFA2	$524.34	$1,742.36	$2,266.70
09-45-25-P3-00200.7507	GARVELINK RICHARD N & ANN M183 BUCKINGI	8663 OLINDA WAY 7507FORT MYERS, FL 33912	MFA2	$524.34	$1,742.36	$2,266.70
09-45-25-P3-00200.7508	HARTLEY DON A + HARROD MICHAEL A8663 OL	8663 OLINDA WAY 7508FORT MYERS, FL 33912	MFA2	$524.34	$1,742.36	$2,266.70
09-45-25-P3-00200.7509	CROCCO TONY8663 OLINDA WAY #7509FORT MY	8663 OLINDA WAY 7509FORT MYERS, FL 33912	MFA2	$524.34	$1,742.36	$2,266.70
09-45-25-P3-00200.7510	HART MICHAEL D +WILLIAMS BILLY S H/W16604	8663 OLINDA WAY 7510FORT MYERS, FL 33912	MFA2	$524.34	$1,742.36	$2,266.70
09-45-25-P3-00200.7601	8697 OLINDA 7601 LLC321 N 28TH STCAMP HILL	8697 OLINDA WAY 7601FORT MYERS, FL 33912	MFA2	$524.34	$1,742.36	$2,266.70
09-45-25-P3-00200.7602	KRAEER CATHY L8697 OLINDA WAY#7602FORT M	8697 OLINDA WAY 7602FORT MYERS, FL 33912	MFA2	$524.34	$1,742.36	$2,266.70
09-45-25-P3-00200.7603	PIASTRELLI LISA M +PERSINGER GARY W/H19 O	8697 OLINDA WAY 7603FORT MYERS, FL 33912	MFA2	$524.34	$1,742.36	$2,266.70
09-45-25-P3-00200.7604	PASEO LLC36630 HEATHERTON DRFARMINGTON	8697 OLINDA WAY 7604FORT MYERS, FL 33912	MFA2	$524.34	$1,742.36	$2,266.70
09-45-25-P3-00200.7605	INGRAHAM GAIL6335 BOYKIN SPANIEL RDCHAR	8697 OLINDA WAY 7605FORT MYERS, FL 33912	MFA2	$524.34	$1,742.36	$2,266.70
09-45-25-P3-00200.7606	CHU LOLA C TRFOR LOLA C CHU REVOCABLE T	8697 OLINDA WAY 7606FORT MYERS, FL 33912	MFA2	$524.34	$1,742.36	$2,266.70
09-45-25-P3-00200.7607	RUSSO PETER + DEBORAH107 MIDDLE RIVER R	8697 OLINDA WAY 7607FORT MYERS, FL 33912	MFA2	$524.34	$1,742.36	$2,266.70
09-45-25-P3-00200.7608	NADERMANN TONY M 1/2 + NADERMANN TERR	8697 OLINDA WAY 7608FORT MYERS, FL 33912	MFA2	$524.34	$1,742.36	$2,266.70
09-45-25-P3-00200.7609	OKEEFE JOSEPH A +OKEEFE NATALIE M KUNSM	8697 OLINDA WAY 7609FORT MYERS, FL 33912	MFA2	$524.34	$1,742.36	$2,266.70
09-45-25-P3-00200.7610	GOTTSCHALK ANTHONY E + GOTTSCHALK JOR	8697 OLINDA WAY 7610FORT MYERS, FL 33912	MFA2	$524.34	$1,742.36	$2,266.70
09-45-25-P3-00200.7701	CASEY MARK C + KELLY A +JOBE KAROL T/C65-	11758 IZARRA WAY 7701FORT MYERS, FL 33912	MFA2	$524.34	$1,742.36	$2,266.70
09-45-25-P3-00200.7702	MICHAEL J HALL TRUST +KIMBERLY S HALL TR	11758 IZARRA WAY 7702FORT MYERS, FL 33912	MFA2	$524.34	$1,742.36	$2,266.70
09-45-25-P3-00200.7703	OTTO TRAVIS & MELISSA905 ASTER CTFAIRFAX	11758 IZARRA WAY 7703FORT MYERS, FL 33912	MFA2	$524.34	$1,742.36	$2,266.70
09-45-25-P3-00200.7704	GAUTHIER LIONEL +LABELLE SYLVIE J/T224 RU	11758 IZARRA WAY 7704FORT MYERS, FL 33912	MFA2	$524.34	$1,742.36	$2,266.70
09-45-25-P3-00200.7705	COTT JERRY M + PATRICIA R11327 HARRISON ST	11758 IZARRA WAY 7705FORT MYERS, FL 33912	MFA2	$524.34	$1,742.36	$2,266.70
09-45-25-P3-00200.7706	TOOHEY BERNADETTE MARGARET + TOOHEY J	11758 IZARRA WAY 7706FORT MYERS, FL 33912	MFA2	$524.34	$1,742.36	$2,266.70
09-45-25-P3-00200.7707	PALMISANO JOSEPH A365 LEGEND VIEW WALES	11758 IZARRA WAY 7707FORT MYERS, FL 33912	MFA2	$524.34	$1,742.36	$2,266.70
09-45-25-P3-00200.7708	BOYCE WILLIAM JOHN +HANES KAREN ANN H/	11758 IZARRA WAY 7708FORT MYERS, FL 33912	MFA2	$524.34	$1,742.36	$2,266.70
09-45-25-P3-00200.7709	POLITANO AURELIO & POLITANO LORRAINE A1	11758 IZARRA WAY 7709FORT MYERS, FL 33912	MFA2	$524.34	$1,742.36	$2,266.70
09-45-25-P3-00200.7710	WESCH RICHARD WM + DIANE L11758 IZARRA W	11758 IZARRA WAY 7710FORT MYERS, FL 33912	MFA2	$524.34	$1,742.36	$2,266.70
09-45-25-P3-00200.7801	FOX DANIEL T + CAROL M8127 LARK STFOGELS	11736 IZARRA WAY 7801FORT MYERS, FL 33912	MFA2	$524.34	$1,742.36	$2,266.70
09-45-25-P3-00200.7802	GOMEZ JOSE G11736 IZARRA WAY #7802FORT M	11736 IZARRA WAY 7802FORT MYERS, FL 33912	MFA2	$524.34	$1,742.36	$2,266.70
09-45-25-P3-00200.7803	SHREFFLER TERESA M7135 SECLUDED PINES DF	11736 IZARRA WAY 7803FORT MYERS, FL 33912	MFA2	$524.34	$1,742.36	$2,266.70
09-45-25-P3-00200.7804	SCHREINER STEPHEN + FAY67 GREEN FOREST C	11736 IZARRA WAY 7804FORT MYERS, FL 33912	MFA2	$524.34	$1,742.36	$2,266.70
09-45-25-P3-00200.7805	CLAAR VICTOR V11736 IZARRA WAY # 7805FORT	11736 IZARRA WAY 7805FORT MYERS, FL 33912	MFA2	$524.34	$1,742.36	$2,266.70
09-45-25-P3-00200.7806	BLAKE RICHARD A & NANACY A TRFOR BLAKE	11736 IZARRA WAY 7806FORT MYERS, FL 33912	MFA2	$524.34	$1,742.36	$2,266.70
09-45-25-P3-00200.7807	MERSCHEN CHERYL A + WILLIAM L11736 IZARR	11736 IZARRA WAY 7807FORT MYERS, FL 33912	MFA2	$524.34	$1,742.36	$2,266.70
09-45-25-P3-00200.7808	BINDY REALTY LLC18 NUTMEG LANE STAMFOR	11736 IZARRA WAY 7808FORT MYERS, FL 33912	MFA2	$524.34	$1,742.36	$2,266.70
09-45-25-P3-00200.7809	COTT HUSHMAND J + CLAUDIA Z3830 N VERNO	11736 IZARRA WAY 7809FORT MYERS, FL 33912	MFA2	$524.34	$1,742.36	$2,266.70
09-45-25-P3-00200.7810	JERWERS DUSTIN +JERWERS MARTIN J/T11736 I	11736 IZARRA WAY 7810FORT MYERS, FL 33912	MFA2	$524.34	$1,742.36	$2,266.70
09-45-25-P3-00200.7901	CECCHINI SANDRA J11977 IZARRA WAY#7901FO	11977 IZARRA WAY 7901FORT MYERS, FL 33912	MFA2	$524.34	$1,742.36	$2,266.70
09-45-25-P3-00200.7902	THEBERGE NORMAND H & THEBERGE PAULINE	11977 IZARRA WAY 7902FORT MYERS, FL 33912	MFA2	$524.34	$1,742.36	$2,266.70
09-45-25-P3-00200.7903	DENT BETTY J TRFOR BETTY J DENT TRUST1197	11977 IZARRA WAY 7903FORT MYERS, FL 33912	MFA2	$524.34	$1,742.36	$2,266.70
09-45-25-P3-00200.7904	SWEET VICTORIA RAE11977 IZARRA WAY #7904F	11977 IZARRA WAY 7904FORT MYERS, FL 33912	MFA2	$524.34	$1,742.36	$2,266.70
09-45-25-P3-00200.8001	PENALVER JESUS +CROSTA MICHAEL + RAQUEL	8760 MELOSIA ST 8001FORT MYERS, FL 33912	MFA2	$524.34	$1,742.36	$2,266.70
09-45-25-P3-00200.8002	BOLGER COLLEEN +GIBSON JANE A J/T11140 ES	8760 MELOSIA ST 8002FORT MYERS, FL 33912	MFA2	$524.34	$1,742.36	$2,266.70
09-45-25-P3-00200.8003	GODDARD STUART P & NANCY L8 EASTBROOK	8760 MELOSIA ST 8003FORT MYERS, FL 33912	MFA2	$524.34	$1,742.36	$2,266.70
09-45-25-P3-00200.8004	WILLIAMS VIRGIL R JR TRFOR WILLIAMS LIVIN	8760 MELOSIA ST 8004FORT MYERS, FL 33912	MFA2	$524.34	$1,742.36	$2,266.70
09-45-25-P3-00200.8005	BIRD JAMES P III +MUGOMBA-BIRD ESTHER H/W	8760 MELOSIA ST 8005FORT MYERS, FL 33912	MFA2	$524.34	$1,742.36	$2,266.70
09-45-25-P3-00200.8006	SEIBEL D ARTHUR + SHEARL V1805 MUIRFIELD	8760 MELOSIA ST 8006FORT MYERS, FL 33912	MFA2	$524.34	$1,742.36	$2,266.70
09-45-25-P3-00200.8101	TANKER SCOTT A86 BUCKINGHAM DRSOUTHA	11993 NALDA ST 8101FORT MYERS, FL 33912	MFA2	$524.34	$1,742.36	$2,266.70
09-45-25-P3-00200.8102	BOLLINGER SHERRINE B186 COLVILLA DRWEST	11993 NALDA ST 8102FORT MYERS, FL 33912	MFA2	$524.34	$1,742.36	$2,266.70

PASEO COMMUNITY DEVELOPMENT DISTRICT
2019 ASSESSMENT LIEN ROLL (UNIFORM METHOD)

STRAP	Owner	Site Address	LU	SERIES 2018 DEBT SERVICE	O&M	TOTAL
09-45-25-P3-00200.8103	RETALIS ARTHUR P + TAMMY M11993 NALDA ST	11993 NALDA ST 8103FORT MYERS, FL 33912	MFA2	$524.34	$1,742.36	$2,266.70
09-45-25-P3-00200.8104	DURAND DAVID V & TAMARA L11993 NALDA ST	11993 NALDA ST 8104FORT MYERS, FL 33912	MFA2	$524.34	$1,742.36	$2,266.70
09-45-25-P3-00200.8201	ST LAURENT RICHARD + DIANE28 BLOSSOM LN	8753 MELOSIA ST 8201FORT MYERS, FL 33912	MFA2	$524.34	$1,742.36	$2,266.70
09-45-25-P3-00200.8202	WILLIS WILLIAM JOHN SAMUEL +MEJALLI-WILL	8753 MELOSIA ST 8202FORT MYERS, FL 33912	MFA2	$524.34	$1,742.36	$2,266.70
09-45-25-P3-00200.8203	SLOMSKI NANCY H8753 MELOSIA ST #8203FORT	8753 MELOSIA ST 8203FORT MYERS, FL 33912	MFA2	$524.34	$1,742.36	$2,266.70
09-45-25-P3-00200.8204	VANISKA MICHAEL + DIANE8753 MELOSIA ST # 8	8753 MELOSIA ST 8204FORT MYERS, FL 33912	MFA2	$524.34	$1,742.36	$2,266.70
09-45-25-P3-00200.8205	DAVILA FLOR RODRIGUEZ + RODRIGUEZ LYDIA	8753 MELOSIA ST 8205FORT MYERS, FL 33912	MFA2	$524.34	$1,742.36	$2,266.70
09-45-25-P3-00200.8206	KNACKSTEDT DONALD P + JOY E1105 LORRAINI	8753 MELOSIA ST 8206FORT MYERS, FL 33912	MFA2	$524.34	$1,742.36	$2,266.70
09-45-25-P3-00200.8207	LEVEQUE ROBERT E & ANNE C21 BONNAILLE AV	8753 MELOSIA ST 8207FORT MYERS, FL 33912	MFA2	$524.34	$1,742.36	$2,266.70
09-45-25-P3-00200.8208	KAMBOURIS CRIS +KAMBOURIS NANCY J/T3482	8753 MELOSIA ST 8208FORT MYERS, FL 33912	MFA2	$524.34	$1,742.36	$2,266.70
09-45-25-P3-00200.8209	THOMAS GARY W & PACE THOMAS BARBARA T	8753 MELOSIA ST 8209FORT MYERS, FL 33912	MFA2	$524.34	$1,742.36	$2,266.70
09-45-25-P3-00200.8210	STIER PHILLIP MORGAN8753 MELOSIA ST #8210I	8753 MELOSIA ST 8210FORT MYERS, FL 33912	MFA2	$524.34	$1,742.36	$2,266.70
09-45-25-P3-00200.8301	CIAFFAGLIONE ROBERT C & CIAFFAGLIONE THE	8791 MELOSIA ST 8301FORT MYERS, FL 33912	MFA2	$524.34	$1,742.36	$2,266.70
09-45-25-P3-00200.8302	MAGURA TODD P +BRUCE-MAGURA MANDI A H	8791 MELOSIA ST 8302FORT MYERS, FL 33912	MFA2	$524.34	$1,742.36	$2,266.70
09-45-25-P3-00200.8303	MONYER ROBERT N + EVELYN A1800 NEW JERS	8791 MELOSIA ST 8303FORT MYERS, FL 33912	MFA2	$524.34	$1,742.36	$2,266.70
09-45-25-P3-00200.8304	8791 MELOSIA STREET 8304 LLC321 N 28TH STCA	8791 MELOSIA ST 8304FORT MYERS, FL 33912	MFA2	$524.34	$1,742.36	$2,266.70
09-45-25-P3-00200.8305	GUERRIERI DENNISPO BOX 43679DETROIT MI, 4	8791 MELOSIA ST 8305FORT MYERS, FL 33912	MFA2	$524.34	$1,742.36	$2,266.70
09-45-25-P3-00200.8306	BOYCE WILLIAM JOHN +HANES KAREN ANN J/T	8791 MELOSIA ST 8306FORT MYERS, FL 33912	MFA2	$524.34	$1,742.36	$2,266.70
09-45-25-P3-00200.8307	MORGAN EMILY E8791 MELOSIA ST # 8307FORT	8791 MELOSIA ST 8307FORT MYERS, FL 33912	MFA2	$524.34	$1,742.36	$2,266.70
09-45-25-P3-00200.8308	LOISA LLC TRFOR PIC 3 LAND TRUST2293 FOXFI	8791 MELOSIA ST 8308FORT MYERS, FL 33912	MFA2	$524.34	$1,742.36	$2,266.70
09-45-25-P3-00200.8309	YEITZ ANGELO P JR + TINA M29 N WAWECUS HI	8791 MELOSIA ST 8309FORT MYERS, FL 33912	MFA2	$524.34	$1,742.36	$2,266.70
09-45-25-P3-00200.8310	SHIELDS THOMAS G + ROBIN17 WENDY DRLINW	8791 MELOSIA ST 8310FORT MYERS, FL 33912	MFA2	$524.34	$1,742.36	$2,266.70
09-45-25-P3-00200.8401	SPONSELLER SUSAN G TRFOR SUSAN G SPONSE	8788 JAVIERA WAY 8401FORT MYERS, FL 33912	MFA2	$524.34	$1,742.36	$2,266.70
09-45-25-P3-00200.8402	GILLIS STEPHEN G & FAHEY-GILLIS MARY8788 J	8788 JAVIERA WAY 8402FORT MYERS, FL 33912	MFA2	$524.34	$1,742.36	$2,266.70
09-45-25-P3-00200.8403	HUTTON JENNIFER DIANA TRFOR JENNIFER DIA	8788 JAVIERA WAY 8403FORT MYERS, FL 33912	MFA2	$524.34	$1,742.36	$2,266.70
09-45-25-P3-00200.8404	WACOWICH DAVID ANTHONY +STIRRETT ELIZA	8788 JAVIERA WAY 8404FORT MYERS, FL 33912	MFA2	$524.34	$1,742.36	$2,266.70
09-45-25-P3-00200.8405	ROACH BARBARA RASNER8788 JAVIERA WAY #	8788 JAVIERA WAY 8405FORT MYERS, FL 33912	MFA2	$524.34	$1,742.36	$2,266.70
09-45-25-P3-00200.8406	1322693 ONTARIO LIMITED1811 ASHBURNHAM I	8788 JAVIERA WAY 8406FORT MYERS, FL 33912	MFA2	$524.34	$1,742.36	$2,266.70
09-45-25-P3-00200.8407	LARSON ANN MARIE TRFOR ANN MARIE LARSO	8788 JAVIERA WAY 8407FORT MYERS, FL 33912	MFA2	$524.34	$1,742.36	$2,266.70
09-45-25-P3-00200.8408	SCOLLO ROBERT J + STACIE A8788 JAVIERA WAY	8788 JAVIERA WAY 8408FORT MYERS, FL 33912	MFA2	$524.34	$1,742.36	$2,266.70
09-45-25-P3-00200.8409	KELLY KURT A TRFOR KURT A + ANN M KELLY T	8788 JAVIERA WAY 8409FORT MYERS, FL 33912	MFA2	$524.34	$1,742.36	$2,266.70
09-45-25-P3-00200.8410	HIRD JOHN F JR & ARCIA-HIRD MARIA8788 JAVI	8788 JAVIERA WAY 8410FORT MYERS, FL 33912	MFA2	$524.34	$1,742.36	$2,266.70
09-45-25-P3-00200.8501	MILLENNIUM TRUST COMPANY LLCFBO BRUCE	8752 JAVIERA WAY 8501FORT MYERS, FL 33912	MFA2	$524.34	$1,742.36	$2,266.70
09-45-25-P3-00200.8502	LIBERI PETER & TAMMIE L270 BUTLER BLVDBA	8752 JAVIERA WAY 8502FORT MYERS, FL 33912	MFA2	$524.34	$1,742.36	$2,266.70
09-45-25-P3-00200.8503	GILLENTINE JIMMY T + JUDITH CPO BOX 3055M	8752 JAVIERA WAY 8503FORT MYERS, FL 33912	MFA2	$524.34	$1,742.36	$2,266.70
09-45-25-P3-00200.8504	1876400 ONTARIO LIMITED433 MCKIM STSUDBU	8752 JAVIERA WAY 8504FORT MYERS, FL 33912	MFA2	$524.34	$1,742.36	$2,266.70
09-45-25-P3-00200.8505	STIRRETT LINDA MARIE3431 EAGLEVIEW CRES	8752 JAVIERA WAY 8505FORT MYERS, FL 33912	MFA2	$524.34	$1,742.36	$2,266.70
09-45-25-P3-00200.8506	FOSTER ROBERT J +FOSTER D JILL J/T11 ATWOO	8752 JAVIERA WAY 8506FORT MYERS, FL 33912	MFA2	$524.34	$1,742.36	$2,266.70
09-45-25-P3-00200.8507	DAMICO PAUL A II8752 JAVIERA WAY #8507FORT	8752 JAVIERA WAY 8507FORT MYERS, FL 33912	MFA2	$524.34	$1,742.36	$2,266.70
09-45-25-P3-00200.8508	FIGUEROA DAVID & DOROTHY R8752 JAVIERA W	8752 JAVIERA WAY 8508FORT MYERS, FL 33912	MFA2	$524.34	$1,742.36	$2,266.70
09-45-25-P3-00200.8509	GASPARINO FRANK M & GASPARINO MARIANN	8752 JAVIERA WAY 8509FORT MYERS, FL 33912	MFA2	$524.34	$1,742.36	$2,266.70
09-45-25-P3-00200.8510	WILSON JOHN P + KAREN L5 PLATT DRWALLING	8752 JAVIERA WAY 8510FORT MYERS, FL 33912	MFA2	$524.34	$1,742.36	$2,266.70
09-45-25-P3-00200.8601	ANDRADE DIEGO11901 IZARRA WAY APT 8601FO	11901 IZARRA WAY 8601FORT MYERS, FL 33912	MFA2	$524.34	$1,742.36	$2,266.70
09-45-25-P3-00200.8602	DECRISTOFANO GIUSEPPE + NANCY120 MALTB	11901 IZARRA WAY 8602FORT MYERS, FL 33912	MFA2	$524.34	$1,742.36	$2,266.70
09-45-25-P3-00200.8603	POLLIN CHRISTIE A + KITCHEN NICHOLAS11901	11901 IZARRA WAY 8603FORT MYERS, FL 33912	MFA2	$524.34	$1,742.36	$2,266.70
09-45-25-P3-00200.8604	CARUANA GRAHAM17-58 SHERWOOD AVETORO	11901 IZARRA WAY 8604FORT MYERS, FL 33912	MFA2	$524.34	$1,742.36	$2,266.70
09-45-25-P3-00200.8605	BROWN BRITTANY M + BROWN RICHARD11901	11901 IZARRA WAY 8605FORT MYERS, FL 33912	MFA2	$524.34	$1,742.36	$2,266.70
09-45-25-P3-00200.8606	LOCAST MELISSA A1972 SEAFORD AVEWANTAG	11901 IZARRA WAY 8606FORT MYERS, FL 33912	MFA2	$524.34	$1,742.36	$2,266.70
09-45-25-P3-00200.8607	WHITAKER JEFFERY & CAROLYN4673 W 3000N R	11901 IZARRA WAY 8607FORT MYERS, FL 33912	MFA2	$524.34	$1,742.36	$2,266.70
09-45-25-P3-00200.8608	CHAPMAN ROBERT O +GASPERINI BONNIE L J/T	11901 IZARRA WAY 8608FORT MYERS, FL 33912	MFA2	$524.34	$1,742.36	$2,266.70
09-45-25-P3-00200.8609	REUSSE PATRICK J +DILLON KATHLEEN H/W245	11901 IZARRA WAY 8609FORT MYERS, FL 33912	MFA2	$524.34	$1,742.36	$2,266.70
09-45-25-P3-00200.8610	FINN PAUL NICHOLAS & ZUCCARELLI NANCY C	11901 IZARRA WAY 8610FORT MYERS, FL 33912	MFA2	$524.34	$1,742.36	$2,266.70
09-45-25-P3-00200.8611	SARKIN FREDRIC S + NADA S829 ROCKDALE RD	11901 IZARRA WAY 8611FORT MYERS, FL 33912	MFA2	$524.34	$1,742.36	$2,266.70
09-45-25-P3-00200.8612	PEDULLA DENISE E11901 IZARRA WAY #8612FOR	11901 IZARRA WAY 8612FORT MYERS, FL 33912	MFA2	$524.34	$1,742.36	$2,266.70

PASEO COMMUNITY DEVELOPMENT DISTRICT
2019 ASSESSMENT LIEN ROLL (UNIFORM METHOD)

STRAP	Owner	Site Address	LU	SERIES 2018 DEBT SERVICE	O&M	TOTAL
09-45-25-P3-00200.8701	LEON MANUEL M + ZENOBIA C3 FRINGE CTNAN	11875 IZARRA WAY 8701FORT MYERS, FL 33912	MFA2	$524.34	$1,742.36	$2,266.70
09-45-25-P3-00200.8702	DAMON JACK G & DEBORAH M8236 PROVENCIA	11875 IZARRA WAY 8702FORT MYERS, FL 33912	MFA2	$524.34	$1,742.36	$2,266.70
09-45-25-P3-00200.8703	RASMUSSEN BROCK A +RASMUSSEN ERIC R + L	11875 IZARRA WAY 8703FORT MYERS, FL 33912	MFA2	$524.34	$1,742.36	$2,266.70
09-45-25-P3-00200.8704	ZIEGLER SALLY TRFOR SALLY ZIEGLER TRUST5	11875 IZARRA WAY 8704FORT MYERS, FL 33912	MFA2	$524.34	$1,742.36	$2,266.70
09-45-25-P3-00200.8705	HOUN EDWARD ALBERT +GRENGS AMY JEAN H	11875 IZARRA WAY 8705FORT MYERS, FL 33912	MFA2	$524.34	$1,742.36	$2,266.70
09-45-25-P3-00200.8706	GIONFRIDDO BARRY TR FOR BARRY GIONFRIDI	11875 IZARRA WAY 8706FORT MYERS, FL 33912	MFA2	$524.34	$1,742.36	$2,266.70
09-45-25-P3-00200.8707	SOLLIDAY NANCY MARIE +MCFARLAND RENEE	11875 IZARRA WAY 8707FORT MYERS, FL 33912	MFA2	$524.34	$1,742.36	$2,266.70
09-45-25-P3-00200.8708	DAVIES STEPHEN + SUSAN6 WOOD FARM CLOSE	11875 IZARRA WAY 8708FORT MYERS, FL 33912	MFA2	$524.34	$1,742.36	$2,266.70
09-45-25-P3-00200.8709	CASCONE NICOLE L11875 IZARRA WAY #8709FO	11875 IZARRA WAY 8709FORT MYERS, FL 33912	MFA2	$524.34	$1,742.36	$2,266.70
09-45-25-P3-00200.8710	OLIVER NEIL + DIANE1292 TYANDAGA PARK DR	11875 IZARRA WAY 8710FORT MYERS, FL 33912	MFA2	$524.34	$1,742.36	$2,266.70
09-45-25-P3-00200.8711	STEILS MARY C7145 SUNCREST DRSALINE MI, 4	11875 IZARRA WAY 8711FORT MYERS, FL 33912	MFA2	$524.34	$1,742.36	$2,266.70
09-45-25-P3-00200.8712	JOHN SCOTT NELSON TRUST +BARBARA A NELS	11875 IZARRA WAY 8712FORT MYERS, FL 33912	MFA2	$524.34	$1,742.36	$2,266.70
09-45-25-P3-00200.8801	LARSON ROBERT W + LARSON LORI L11870 LIAN	11870 LIANA ST 8801FORT MYERS, FL 33912	MFA2	$524.34	$1,742.36	$2,266.70
09-45-25-P3-00200.8802	THOMAS WILLIAM ELIAS +THOMAS MARIA M H	11870 LIANA ST 8802FORT MYERS, FL 33912	MFA2	$524.34	$1,742.36	$2,266.70
09-45-25-P3-00200.8803	JONAS RONALD W + ELYSE GRONALD JONAS118	11870 LIANA ST 8803FORT MYERS, FL 33912	MFA2	$524.34	$1,742.36	$2,266.70
09-45-25-P3-00200.8804	KHAN ZIAD M156 FIRST PARISH RD UNIT 5SCITU	11870 LIANA ST 8804FORT MYERS, FL 33912	MFA2	$524.34	$1,742.36	$2,266.70
09-45-25-P3-00200.8805	GUERRA RICHARD + TONI ANN11870 LIANA ST#8	11870 LIANA ST 8805FORT MYERS, FL 33912	MFA2	$524.34	$1,742.36	$2,266.70
09-45-25-P3-00200.8901	BENDELL RONALD J + KIMBERLY A11860 LIANA	11860 LIANA ST 8901FORT MYERS, FL 33912	MFA2	$524.34	$1,742.36	$2,266.70
09-45-25-P3-00200.8902	ARNOLD DOROTHY JEAN H TRFOR DOROTHY JE	11860 LIANA ST 8902FORT MYERS, FL 33912	MFA2	$524.34	$1,742.36	$2,266.70
09-45-25-P3-00200.8903	DAVIS KENNETH L TRFOR KENNETH L DAVIS TR	11860 LIANA ST 8903FORT MYERS, FL 33912	MFA2	$524.34	$1,742.36	$2,266.70
09-45-25-P3-00200.8904	STANTON THOMAS P + PATRICIA A11860 LIANA S	11860 LIANA ST 8904FORT MYERS, FL 33912	MFA2	$524.34	$1,742.36	$2,266.70
09-45-25-P3-00200.9001	CRUMBLY CRAIG DAVIS11850 LIANA ST #9001FO	11850 LIANA ST 9001FORT MYERS, FL 33912	MFA2	$524.34	$1,742.36	$2,266.70
09-45-25-P3-00200.9002	BENEDETTO THOMAS M + MAY JUNE41 STORM	11850 LIANA ST 9002FORT MYERS, FL 33912	MFA2	$524.34	$1,742.36	$2,266.70
09-45-25-P3-00200.9003	TARSI RAYMOND & LAURA11850 LIANA ST #9003	11850 LIANA ST 9003FORT MYERS, FL 33912	MFA2	$524.34	$1,742.36	$2,266.70
09-45-25-P3-00200.9004	VRIEZE KEVIN + KATHIE11450 CIRCLE RIDGE CT	11850 LIANA ST 9004FORT MYERS, FL 33912	MFA2	$524.34	$1,742.36	$2,266.70
09-45-25-P3-00200.9101	GODSK NANCY11840 LIANA ST #9101FORT MYE	11840 LIANA ST 9101FORT MYERS, FL 33912	MFA2	$524.34	$1,742.36	$2,266.70
09-45-25-P3-00200.9102	WHELAN THOMAS M + HILARY TR FOR THOMAS	11840 LIANA ST 9102FORT MYERS, FL 33912	MFA2	$524.34	$1,742.36	$2,266.70
09-45-25-P3-00200.9103	9103 ASSOCIATES LLC226 UPTON RDCOLCHESTI	11840 LIANA ST 9103FORT MYERS, FL 33912	MFA2	$524.34	$1,742.36	$2,266.70
09-45-25-P3-00200.9201	HENDRY ALEXANDER F + HEATHER A11988 NAL	11988 NALDA ST 9201FORT MYERS, FL 33912	MFA2	$524.34	$1,742.36	$2,266.70
09-45-25-P3-00200.9202	WARREN ROBERT & JAYNE M2074 ISLAND CIRW	11988 NALDA ST 9202FORT MYERS, FL 33912	MFA2	$524.34	$1,742.36	$2,266.70
09-45-25-P3-00200.9203	HUNT CHRISTOPHER H + DIANE A39135 LORIEN	11988 NALDA ST 9203FORT MYERS, FL 33912	MFA2	$524.34	$1,742.36	$2,266.70
09-45-25-P3-00200.9204	MEDVEC GERALD J & MIRAMANT BEVERLY A45	11988 NALDA ST 9204FORT MYERS, FL 33912	MFA2	$524.34	$1,742.36	$2,266.70
09-45-25-P3-00200.9301	NEGOVANLIS STEVE141 TOYNBEE TRAILTORON	11976 NALDA ST 9301FORT MYERS, FL 33912	MFA2	$524.34	$1,742.36	$2,266.70
09-45-25-P3-00200.9302	LOPES JOAO M8992 PORTOFINO PLDUBLIN OH, 4	11976 NALDA ST 9302FORT MYERS, FL 33912	MFA2	$524.34	$1,742.36	$2,266.70
09-45-25-P3-00200.9303	TRINLER HANS W & DONNA M L/E11976 NALDA	11976 NALDA ST 9303FORT MYERS, FL 33912	MFA2	$524.34	$1,742.36	$2,266.70
09-45-25-P3-00200.9304	RETALIS TAMMY M & ARTHUR P11976 NALDA ST	11976 NALDA ST 9304FORT MYERS, FL 33912	MFA2	$524.34	$1,742.36	$2,266.70
09-45-25-P3-00200.9401	SCHROEDER SHAWN T + LISA A 11964 NALDA ST	11964 NALDA ST 9401FORT MYERS, FL 33912	MFA2	$524.34	$1,742.36	$2,266.70
09-45-25-P3-00200.9402	WEISS DAVID A + JOYCE M11964 NALDA ST #940	11964 NALDA ST 9402FORT MYERS, FL 33912	MFA2	$524.34	$1,742.36	$2,266.70
09-45-25-P3-00200.9403	COULOURIS WILLIAM J +GRIEPER SANDRA R J/T	11964 NALDA ST 9403FORT MYERS, FL 33912	MFA2	$524.34	$1,742.36	$2,266.70
09-45-25-P3-00200.9404	POLTINNIKOV IGOR + NATALIE5295 LAKEMONT	11964 NALDA ST 9404FORT MYERS, FL 33912	MFA2	$524.34	$1,742.36	$2,266.70
09-45-25-P3-00200.9501	DENEZZA RICHARD ALLEN + VROOM MARK ER	8832 OLIVERIA ST 9501FORT MYERS, FL 33912	MFA2	$524.34	$1,742.36	$2,266.70
09-45-25-P3-00200.9502	RONDINELLI DAVID F +BERNADETTE8832 OLIVE	8832 OLIVERIA ST 9502FORT MYERS, FL 33912	MFA2	$524.34	$1,742.36	$2,266.70
09-45-25-P3-00200.9503	ROJAS MIGUEL A8832 OLIVERIA ST #9503FORT M	8832 OLIVERIA ST 9503FORT MYERS, FL 33912	MFA2	$524.34	$1,742.36	$2,266.70
09-45-25-P3-00200.9504	LIOS MARINA6704 MILL RDEGG HARBOR TOWN	8832 OLIVERIA ST 9504FORT MYERS, FL 33912	MFA2	$524.34	$1,742.36	$2,266.70
09-45-25-P3-00200.9505	MCLEAN DALE A + LESLIE A8832 OLIVERIA ST #	8832 OLIVERIA ST 9505FORT MYERS, FL 33912	MFA2	$524.34	$1,742.36	$2,266.70
09-45-25-P3-00200.9506	RIETERGEN STEPHANUS W8832 OLIVERIA ST # 9	8832 OLIVERIA ST 9506FORT MYERS, FL 33912	MFA2	$524.34	$1,742.36	$2,266.70
09-45-25-P3-00200.9601	HURWITZ JONATHAN M + REBECCA S8856 OLIVI	8856 OLIVERIA ST 9601FORT MYERS, FL 33912	MFA2	$524.34	$1,742.36	$2,266.70
09-45-25-P3-00200.9602	TORRES JOSE L525 CENTRAL AVE # 205WESTFIE	8856 OLIVERIA ST 9602FORT MYERS, FL 33912	MFA2	$524.34	$1,742.36	$2,266.70
09-45-25-P3-00200.9603	YEAGER NICOLE8856 OLIVERIA ST # 9603FORT M	8856 OLIVERIA ST 9603FORT MYERS, FL 33912	MFA2	$524.34	$1,742.36	$2,266.70
09-45-25-P3-00200.9604	ABRIL OLGA5733 RUE GALILEE LN SANFORD FL	8856 OLIVERIA ST 9604FORT MYERS, FL 33912	MFA2	$524.34	$1,742.36	$2,266.70
09-45-25-P3-00200.9605	PAPAZIAN EDWARD S +ZINDELL RENEE M H/W3	8856 OLIVERIA ST 9605FORT MYERS, FL 33912	MFA2	$524.34	$1,742.36	$2,266.70
09-45-25-P3-00200.9606	TURLEY ROBERT C & RORY L8856 OLIVERIA ST #	8856 OLIVERIA ST 9606FORT MYERS, FL 33912	MFA2	$524.34	$1,742.36	$2,266.70
09-45-25-P3-00200.9701	MENON CHANDRA S + ESTELLE G444 KING AVE	8900 OLIVERIA ST 9701FORT MYERS, FL 33912	MFA2	$524.34	$1,742.36	$2,266.70
09-45-25-P3-00200.9702	HAMMEN CARLATTA J + THOMAS E8900 OLIVER	8900 OLIVERIA ST 9702FORT MYERS, FL 33912	MFA2	$524.34	$1,742.36	$2,266.70

PASEO COMMUNITY DEVELOPMENT DISTRICT
2019 ASSESSMENT LIEN ROLL (UNIFORM METHOD)

STRAP	Owner	Site Address	LU	SERIES 2018 DEBT SERVICE	O&M	TOTAL
09-45-25-P3-00200.9703	THOMPSON JON D & SARA E2098 DEMPSTER DR	8900 OLIVERIA ST 9703FORT MYERS, FL 33912	MFA2	$524.34	$1,742.36	$2,266.70
09-45-25-P3-00200.9704	KREISSL RALPH R TRFOR KREISSL FAMILY TRUS	8900 OLIVERIA ST 9704FORT MYERS, FL 33912	MFA2	$524.34	$1,742.36	$2,266.70
09-45-25-P3-00200.9705	WEISS JACK A + JORDANA S8900 OLIVERIA ST #	8900 OLIVERIA ST 9705FORT MYERS, FL 33912	MFA2	$524.34	$1,742.36	$2,266.70
09-45-25-P3-00200.9706	DIGBY EMILIE V3329 EDGEWOOD AVE # 9706FOI	8900 OLIVERIA ST 9706FORT MYERS, FL 33912	MFA2	$524.34	$1,742.36	$2,266.70
09-45-25-P3-00200.9801	LAU STEPHEN LAWRENCE +WU YUN ANNA H/W	11915 KEMENA STFORT MYERS, FL 33912	MFA2	$524.34	$1,742.36	$2,266.70
09-45-25-P3-00200.9901	MADDOX AUSTIN D11901 KEMENA STFORT MYE	11901 KEMENA STFORT MYERS, FL 33912	MFA2	$524.34	$1,742.36	$2,266.70
09-45-25-P3-00201.0001	BARTON DAVID B + MIRIAM L TRFOR BARTON T	11893 KEMENA STFORT MYERS, FL 33912	MFA2	$524.34	$1,742.36	$2,266.70
09-45-25-P3-00201.0101	GREER DANAE11887 KEMENA STFORT MYERS F	11887 KEMENA STFORT MYERS, FL 33912	MFA2	$524.34	$1,742.36	$2,266.70
09-45-25-P3-00201.0201	LUNA JONAS +PEREZ-LUNA YADIRIS H/W11875 K	11875 KEMENA STFORT MYERS, FL 33912	MFA2	$524.34	$1,742.36	$2,266.70
09-45-25-P3-00201.0301	SHOWLER LARRY J + CHRISTINE E5038 CEDER R	11863 KEMENA STFORT MYERS, FL 33912	MFA2	$524.34	$1,742.36	$2,266.70
09-45-25-P3-00201.0401	ANSON MICHAEL E 1/2 + MOFFATT SUSAN L 1/2 T	11851 KEMENA STFORT MYERS, FL 33912	MFA2	$524.34	$1,742.36	$2,266.70
09-45-25-P3-00201.0501	CLINE BRADLEY J + ANNE R11839 KEMENA STFO	11839 KEMENA STFORT MYERS, FL 33912	MFA2	$524.34	$1,742.36	$2,266.70
09-45-25-P3-00201.0601	CHOHAN ZAHID M + SUSAN M3 SATELLITE CIRC	11827 KEMENA STFORT MYERS, FL 33912	MFA2	$524.34	$1,742.36	$2,266.70
09-45-25-P3-00201.0701	COLANTONI JAMES V III +COLANTONI LAUREN	11826 NALDA STFORT MYERS, FL 33912	MFA2	$524.34	$1,742.36	$2,266.70
09-45-25-P3-00201.0801	MULLEN BRUCE + LYNETTE10953 ESTEBAN DRI	11834 NALDA STFORT MYERS, FL 33912	MFA2	$524.34	$1,742.36	$2,266.70
09-45-25-P3-00201.0901	ADAM DOUGLAS A + JENNIFER L257 MARKLANI	11846 NALDA STFORT MYERS, FL 33912	MFA2	$524.34	$1,742.36	$2,266.70
09-45-25-P3-00201.1001	TRESSEL DAVID P + AMY K2250 TIMBER CREEK	11854 NALDA STFORT MYERS, FL 33912	MFA2	$524.34	$1,742.36	$2,266.70
09-45-25-P3-00201.1101	SPIDEL SCOTT A + STEFFANIE B2544 ROYAL BLV	11862 NALDA STFORT MYERS, FL 33912	MFA2	$524.34	$1,742.36	$2,266.70
09-45-25-P3-00201.1201	MILLER ELLIOT T + SMITH MEREDYTH11876 NA	11876 NALDA STFORT MYERS, FL 33912	MFA2	$524.34	$1,742.36	$2,266.70
09-45-25-P3-00201.1301	MOON MELISSA850 VILLAGE CENTER DR # 210B	11886 NALDA STFORT MYERS, FL 33912	MFA2	$524.34	$1,742.36	$2,266.70
09-45-25-P3-00201.1401	MULLIN RICHARD J + CHRISTINE E71 BEECH NU	11894 NALDA STFORT MYERS, FL 33912	MFA2	$524.34	$1,742.36	$2,266.70
09-45-25-P3-00201.1501	ATWATER SUSAN M11902 NALDA STFORT MYER	11902 NALDA STFORT MYERS, FL 33912	MFA2	$524.34	$1,742.36	$2,266.70
09-45-25-P3-00201.1601	KIRRANE MARJORIE A17 LOCUST LANE SAG HA	11914 NALDA STFORT MYERS, FL 33912	MFA2	$524.34	$1,742.36	$2,266.70
09-45-25-P3-00201.1701	TABOR ANDREW B +LEON-PEREIRA MAURELIS	11947 NALDA ST 11701FORT MYERS, FL 33912	MFA2	$524.34	$1,742.36	$2,266.70
09-45-25-P3-00201.1702	NICHOLS JAYNE73 APRIL LNNANUET NY, 10954	11947 NALDA ST 11702FORT MYERS, FL 33912	MFA2	$524.34	$1,742.36	$2,266.70
09-45-25-P3-00201.1703	MCKEEVER JAMES L + LUCILLE11947 NALDA ST	11947 NALDA ST 11703FORT MYERS, FL 33912	MFA2	$524.34	$1,742.36	$2,266.70
09-45-25-P3-00201.1704	CHESLIK THOMAS1 CONSULATE DR APT 2HTUC	11947 NALDA ST 11704FORT MYERS, FL 33912	MFA2	$524.34	$1,742.36	$2,266.70
09-45-25-P3-00201.1705	CATAPANO MARK TREVOR & CATAPANO RINET	11947 NALDA ST 11705FORT MYERS, FL 33912	MFA2	$524.34	$1,742.36	$2,266.70
09-45-25-P3-00201.1706	TRAINER CURTIS L3102 EMERALD BLVDKOKOM	11947 NALDA ST 11706FORT MYERS, FL 33912	MFA2	$524.34	$1,742.36	$2,266.70
09-45-25-P3-00201.1801	HAMILTON WILLIAM L + SHARON M11931 NALD	11931 NALDA ST 11801FORT MYERS, FL 33912	MFA2	$524.34	$1,742.36	$2,266.70
09-45-25-P3-00201.1802	RZEMYK CATHY11931 NALDA ST #11802FORT M	11931 NALDA ST 11802FORT MYERS, FL 33912	MFA2	$524.34	$1,742.36	$2,266.70
09-45-25-P3-00201.1803	HILLMAN WALTER G + ALICIA L11931 NALDA ST	11931 NALDA ST 11803FORT MYERS, FL 33912	MFA2	$524.34	$1,742.36	$2,266.70
09-45-25-P3-00201.1804	SAN GIACOMO RENEE11931 NALDA ST # 11804F	11931 NALDA ST 11804FORT MYERS, FL 33912	MFA2	$524.34	$1,742.36	$2,266.70
09-45-25-P3-00201.1805	HILL LAURIE + DONA10 INGLEVIEW DRCALEDO	11931 NALDA ST 11805FORT MYERS, FL 33912	MFA2	$524.34	$1,742.36	$2,266.70
09-45-25-P3-00201.1806	FISHMAN HENRY + LOIS11931 NALDA ST # 11806	11931 NALDA ST 11806FORT MYERS, FL 33912	MFA2	$524.34	$1,742.36	$2,266.70
09-45-25-P3-00201.1901	NOBLE TIMOTHY + ROBYN202 ANCHOR DRSEAS	11907 NALDA ST 11901FORT MYERS, FL 33912	MFA2	$524.34	$1,742.36	$2,266.70
09-45-25-P3-00201.1902	SULLIVAN MICHAEL P11907 NALDA ST #11902 F	11907 NALDA ST 11902FORT MYERS, FL 33912	MFA2	$524.34	$1,742.36	$2,266.70
09-45-25-P3-00201.1903	WOLZ ANDREAS181 CHIPMINK HILL MOUNTAIN	11907 NALDA ST 11903FORT MYERS, FL 33912	MFA2	$524.34	$1,742.36	$2,266.70
09-45-25-P3-00201.1904	BROOKS SANDRA L TRFOR SANDRA L BROOKS	11907 NALDA ST 11904FORT MYERS, FL 33912	MFA2	$524.34	$1,742.36	$2,266.70
09-45-25-P3-00201.1905	DUNWODY JASON E & TEELEE A11907 NALDA S	11907 NALDA ST 11905FORT MYERS, FL 33912	MFA2	$524.34	$1,742.36	$2,266.70
09-45-25-P3-00201.1906	1438737 ONTARIO INC55 COSMOS AVEUXBRIDG	11907 NALDA ST 11906FORT MYERS, FL 33912	MFA2	$524.34	$1,742.36	$2,266.70
09-45-25-P3-00201.2001	SKALSKI CRAIG M + KRISTA11893 NALDA ST # 1	11893 NALDA ST 12001FORT MYERS, FL 33912	MFA2	$524.34	$1,742.36	$2,266.70
09-45-25-P3-00201.2002	COWART TERRY L & JANICE M39611 LAKESHOR	11893 NALDA ST 12002FORT MYERS, FL 33912	MFA2	$524.34	$1,742.36	$2,266.70
09-45-25-P3-00201.2003	WINDT BARBARA11893 NALDA ST # 12003FORT	11893 NALDA ST 12003FORT MYERS, FL 33912	MFA2	$524.34	$1,742.36	$2,266.70
09-45-25-P3-00201.2004	PASEO CORDOVA LLC365 LEGEND VIEWWALES	11893 NALDA ST 12004FORT MYERS, FL 33912	MFA2	$524.34	$1,742.36	$2,266.70
09-45-25-P3-00201.2005	SOMASUNDARAM MANA + VASANTHI18 HEATH	11893 NALDA ST 12005FORT MYERS, FL 33912	MFA2	$524.34	$1,742.36	$2,266.70
09-45-25-P3-00201.2006	BLASI JOHN R + AMELIA11893 NALDA ST #12006	11893 NALDA ST 12006FORT MYERS, FL 33912	MFA2	$524.34	$1,742.36	$2,266.70
09-45-25-P3-00201.2101	NEWHOUSE JAKE + MARY11879 NALDA ST APT	11879 NALDA ST 12101FORT MYERS, FL 33912	MFA2	$524.34	$1,742.36	$2,266.70
09-45-25-P3-00201.2102	GONZALEZ JAIME +BRORSON KURT H/W8300 HA	11879 NALDA ST 12102FORT MYERS, FL 33912	MFA2	$524.34	$1,742.36	$2,266.70
09-45-25-P3-00201.2103	SPREHN GEORGE W + SUSAN M TRFOR GEORGE	11879 NALDA ST 12103FORT MYERS, FL 33912	MFA2	$524.34	$1,742.36	$2,266.70
09-45-25-P3-00201.2104	COY JOHN M + TONI H11879 NALDA ST #12104FO	11879 NALDA ST 12104FORT MYERS, FL 33912	MFA2	$524.34	$1,742.36	$2,266.70
09-45-25-P3-00201.2105	LAMPINEN JOHN JAMES + LINDA A2503 WEST 18	11879 NALDA ST 12105FORT MYERS, FL 33912	MFA2	$524.34	$1,742.36	$2,266.70
09-45-25-P3-00201.2106	FONTAN JUAN E + EVELYN35 GREYCOURT AVE	11879 NALDA ST 12106FORT MYERS, FL 33912	MFA2	$524.34	$1,742.36	$2,266.70
09-45-25-P3-00201.2201	TAYLOR SUNNIE INA + POWERMAX FINANCIAL	11861 NALDA ST 12201FORT MYERS, FL 33912	MFA2	$524.34	$1,742.36	$2,266.70

PASEO COMMUNITY DEVELOPMENT DISTRICT
2019 ASSESSMENT LIEN ROLL (UNIFORM METHOD)

STRAP	Owner	Site Address	LU	SERIES 2018 DEBT SERVICE	O&M	TOTAL
09-45-25-P3-00201.2202	KRZYZEK THOMAS + KRZYZEK SUZANNE J/T10	11861 NALDA ST 12202FORT MYERS, FL 33912	MFA2	$524.34	$1,742.36	$2,266.70
09-45-25-P3-00201.2203	WALD SHELLY ZIMMER11861 NALDA ST # 12203F	11861 NALDA ST 12203FORT MYERS, FL 33912	MFA2	$524.34	$1,742.36	$2,266.70
09-45-25-P3-00201.2204	NAGY ALBERT G TR FOR ALBERT G NAGY TRUST	11861 NALDA ST 12204FORT MYERS, FL 33912	MFA2	$524.34	$1,742.36	$2,266.70
09-45-25-P3-00201.2205	BELT LISA E TRFOR JOHN H BELT TRUST11868 G	11861 NALDA ST 12205FORT MYERS, FL 33912	MFA2	$524.34	$1,742.36	$2,266.70
09-45-25-P3-00201.2206	CLIFFORD WILLIAM N & CLIFFORD LORETTA M1	11861 NALDA ST 12206FORT MYERS, FL 33912	MFA2	$524.34	$1,742.36	$2,266.70
09-45-25-P3-00201.2301	MACCO JEFFREY P & LISA A2568 RIVERSIDE DR	11847 NALDA ST 12301FORT MYERS, FL 33912	MFA2	$524.34	$1,742.36	$2,266.70
09-45-25-P3-00201.2302	TRESSEL DAVID PAUL + TRESSEL AMY KATHLEE	11847 NALDA ST 12302FORT MYERS, FL 33912	MFA2	$524.34	$1,742.36	$2,266.70
09-45-25-P3-00201.2303	HEDIN GREGORY JOHN & HEDIN CAROLYN SUE	11847 NALDA ST 12303FORT MYERS, FL 33912	MFA2	$524.34	$1,742.36	$2,266.70
09-45-25-P3-00201.2304	JONES ROBERT WILLIAM11847 NALDA ST #12304	11847 NALDA ST 12304FORT MYERS, FL 33912	MFA2	$524.34	$1,742.36	$2,266.70
09-45-25-P3-00201.2305	HOFFMAN JANICE R + MITCHELL I236 BEARDSL	11847 NALDA ST 12305FORT MYERS, FL 33912	MFA2	$524.34	$1,742.36	$2,266.70
09-45-25-P3-00201.2306	MCGRATH PATRICIA J TRFOR PATRICIA J MCGRA	11847 NALDA ST 12306FORT MYERS, FL 33912	MFA2	$524.34	$1,742.36	$2,266.70
09-45-25-P4-00100.0010	SCHWINGHAMMER PAUL C & SCHWINGHAMME	11751 ROSALINDA CTFORT MYERS, FL 33912	SFA1	$1,048.67	$1,667.26	$2,715.93
09-45-25-P4-00100.0020	STEVENS ROMAN +STEVENS AUDREY11757 RO	11757 ROSALINDA CTFORT MYERS, FL 33912	SFA1	$1,048.67	$1,667.26	$2,715.93
09-45-25-P4-00100.0030	MOLL WILLIAM D + TERESA J TRFOR WILLIAM D	11763 ROSALINDA CTFORT MYERS, FL 33912	SFA1	$1,048.67	$1,667.26	$2,715.93
09-45-25-P4-00100.0040	HEETHER JAMES A TR +HEETHER NINA L TRFOR	11775 ROSALINDA CTFORT MYERS, FL 33912	SFA1	$1,048.67	$1,667.26	$2,715.93
09-45-25-P4-00100.0050	BROWN GARY V + PAMELA K11821 ROSALINDA	11821 ROSALINDA CTFORT MYERS, FL 33912	SFA1	$1,048.67	$1,667.26	$2,715.93
09-45-25-P4-00100.0060	TRAUB SCOTT L & SANDRA K TRFOR SCOTT L +	11831 ROSALINDA CTFORT MYERS, FL 33912	SFA1	$1,048.67	$1,667.26	$2,715.93
09-45-25-P4-00100.0070	MANNON MONICA L. + SHEPPARD MARY11839 R	11839 ROSALINDA CTFORT MYERS, FL 33912	SFA1	$1,048.67	$1,667.26	$2,715.93
09-45-25-P4-00100.0080	KAUFMAN KENNETH & ELLEN1726 N WEST SILV	11845 ROSALINDA CTFORT MYERS, FL 33912	SFA1	$1,048.67	$1,667.26	$2,715.93
09-45-25-P4-00100.0090	COLGAN MICHAEL JOHN & COLGAN JULIE ANN	11851 ROSALINDA CTFORT MYERS, FL 33912	SFA1	$1,048.67	$1,667.26	$2,715.93
09-45-25-P4-00100.0100	MARVIN DAVID E S & MARVIN MARY ANNE7991	11863 ROSALINDA CTFORT MYERS, FL 33912	SFA1	$1,048.67	$1,667.26	$2,715.93
09-45-25-P4-00100.0110	FAGAN MARK J + SUZANNE D11869 ROSALINDA	11869 ROSALINDA CTFORT MYERS, FL 33912	SFA1	$1,048.67	$1,667.26	$2,715.93
09-45-25-P4-00100.0120	VALDESOLO ERNESTO +CASCIO ROSARIO T/C9	11875 ROSALINDA CTFORT MYERS, FL 33912	SFA1	$1,048.67	$1,667.26	$2,715.93
09-45-25-P4-00100.0130	LJG SOUTHERN INVESTMENTS LLC2905 WEST 1	11879 ROSALINDA CTFORT MYERS, FL 33912	SFA1	$1,048.67	$1,667.26	$2,715.93
09-45-25-P4-00100.0140	DEW ROBERT H11883 ROSALINDA CTFORT MYE	11883 ROSALINDA CTFORT MYERS, FL 33912	SFA1	$1,048.67	$1,667.26	$2,715.93
09-45-25-P4-00100.0150	QUAIN MICHAEL P + ELIZABETH L3028 PARKLA	11889 ROSALINDA CTFORT MYERS, FL 33912	SFA1	$1,048.67	$1,667.26	$2,715.93
09-45-25-P4-00100.0160	HUR WOO JUNG &COPP DAVID11890 ROSALIND	11890 ROSALINDA CTFORT MYERS, FL 33912	SFA1	$1,048.67	$1,667.26	$2,715.93
09-45-25-P4-00100.0170	DENGLER FRANK C + CAROL11884 ROSALINDA	11884 ROSALINDA CTFORT MYERS, FL 33912	SFA1	$1,048.67	$1,667.26	$2,715.93
09-45-25-P4-00100.0180	THEODORE N ZACCHEO TRUST +JEANETTE D Z	11878 ROSALINDA CTFORT MYERS, FL 33912	SFA1	$1,048.67	$1,667.26	$2,715.93
09-45-25-P4-00100.0190	BROWN-CESTERO STEVEN A11872 ROSALINDA	11872 ROSALINDA CTFORT MYERS, FL 33912	SFA1	$1,048.67	$1,667.26	$2,715.93
09-45-25-P4-00100.0200	RUSSELL GORDON W III + LINDA J11866 ROSALI	11866 ROSALINDA CTFORT MYERS, FL 33912	SFA1	$1,048.67	$1,667.26	$2,715.93
09-45-25-P4-00100.0210	PERI SALVATORE13910 FRESHMAN LNFORT MYE	11860 ROSALINDA CTFORT MYERS, FL 33912	SFA1	$1,048.67	$1,667.26	$2,715.93
09-45-25-P4-00100.0220	NAGY ALBERT G TRFOR ALBERT G NAGY TRUST	11854 ROSALINDA CTFORT MYERS, FL 33912	SFA1	$1,048.67	$1,667.26	$2,715.93
09-45-25-P4-00100.0230	KAISER PROPERTIES FT MYERS LLC500 YORK S	11848 ROSALINDA CTFORT MYERS, FL 33912	SFA1	$1,048.67	$1,667.26	$2,715.93
09-45-25-P4-00100.0240	LISICKI JOHN M SR + JACQUELYN11842 ROSALI	11842 ROSALINDA CTFORT MYERS, FL 33912	SFA1	$1,048.67	$1,667.26	$2,715.93
09-45-25-P4-00100.0250	POHLMAN LARRY + MARILYN11836 ROSALINDA	11836 ROSALINDA CTFORT MYERS, FL 33912	SFA1	$1,048.67	$1,667.26	$2,715.93
09-45-25-P4-00100.0260	HYATT PAUL H & PAULA A11830 ROSALINDA CT	11830 ROSALINDA CTFORT MYERS, FL 33912	SFA1	$1,048.67	$1,667.26	$2,715.93
09-45-25-P4-00100.0270	GAFFEY THOMAS M TR +GAFFEY REBECCA L TR	11824 ROSALINDA CTFORT MYERS, FL 33912	SFA1	$1,048.67	$1,667.26	$2,715.93
09-45-25-P4-00100.0280	ALBRECHT JAMES THOMAS +ALBRECHT ROBIN	11818 ROSALINDA CTFORT MYERS, FL 33912	SFA1	$1,048.67	$1,667.26	$2,715.93
09-45-25-P4-00100.0290	DANDREA MICHAEL T & FAITH N702 DEMPSEY	11812 ROSALINDA CTFORT MYERS, FL 33912	SFA1	$1,048.67	$1,667.26	$2,715.93
09-45-25-P4-00100.0300	GREENHALGH DANIEL J + TERESA M8106 FELIS	8106 FELISA CTFORT MYERS, FL 33912	SFA1	$1,048.67	$1,667.26	$2,715.93
09-45-25-P4-00100.0310	QUILES FRANCISCO +VELAZQUEZ DORALMA H	8112 FELISA CTFORT MYERS, FL 33912	SFA1	$1,048.67	$1,667.26	$2,715.93
09-45-25-P4-00100.0320	KARPEN JAY L + FRADELLE8118 FELISA CTFORT	8118 FELISA CTFORT MYERS, FL 33912	SFA1	$1,048.67	$1,667.26	$2,715.93
09-45-25-P4-00100.0330	MULLEN CHARLES J TRFOR CHARLES J MULLEN	8115 FELISA CTFORT MYERS, FL 33912	SFA1	$1,048.67	$1,667.26	$2,715.93
09-45-25-P4-00100.0340	SAPORITO SHEILA A TRFOR SHEILA A SAPORITO	8103 FELISA CTFORT MYERS, FL 33912	SFA1	$0.00	$1,667.26	$1,667.26
09-45-25-P4-00100.0350	SALT SUSAN M11776 ROSALINDA CTFORT MYER	11776 ROSALINDA CTFORT MYERS, FL 33912	SFA1	$1,048.67	$1,667.26	$2,715.93
09-45-25-P4-00100.0360	ANDERSON RICHARD J & ANNA M8186 ARCHER	11770 ROSALINDA CTFORT MYERS, FL 33912	SFA1	$1,048.67	$1,667.26	$2,715.93
09-45-25-P4-00100.0370	KHOURI ROBIN N & KHOURI ALLISON NICOL MI	11764 ROSALINDA CTFORT MYERS, FL 33912	SFA1	$1,048.67	$1,667.26	$2,715.93
09-45-25-P4-00100.0380	EISENBERG LOIS JANE TRFOR LOIS JANE EISEN	11758 ROSALINDA CTFORT MYERS, FL 33912	SFA1	$1,048.67	$1,667.26	$2,715.93
09-45-25-P4-00100.0390	PAXSON JAMES T +PAXSON CHERYL A J/T11752	11752 ROSALINDA CTFORT MYERS, FL 33912	SFA1	$1,048.67	$1,667.26	$2,715.93
09-45-25-P4-00100.0400	DRUCKER RICHARD M + LINDA L5 SANDGATE P	8351 PROVENCIA CTFORT MYERS, FL 33912	SFA1	$1,048.67	$1,667.26	$2,715.93
09-45-25-P4-00100.0410	MONTE FRANK +NICOLETTA SUSAN +GUERRIE	8347 PROVENCIA CTFORT MYERS, FL 33912	SFA1	$1,048.67	$1,667.26	$2,715.93
09-45-25-P4-00100.0420	ANDERSON RALPH C + CAROLE8343 PROVENCI	8343 PROVENCIA CTFORT MYERS, FL 33912	SFA1	$1,048.67	$1,667.26	$2,715.93
09-45-25-P4-00100.0430	CELANO MICHAEL V7680 MULBERRY CTNAPLES	8339 PROVENCIA CTFORT MYERS, FL 33912	SFA1	$1,048.67	$1,667.26	$2,715.93

PASEO COMMUNITY DEVELOPMENT DISTRICT
2019 ASSESSMENT LIEN ROLL (UNIFORM METHOD)

STRAP	Owner	Site Address	LU	SERIES 2018 DEBT SERVICE	O&M	TOTAL
09-45-25-P4-00100.0440	FRY RALPH W JR TR +HODGE MARGARET M TR	8335 PROVENCIA CTFORT MYERS, FL 33912	SFA1	$1,048.67	$1,667.26	$2,715.93
09-45-25-P4-00100.0450	RADKE BRUCE W + JUDY26 ASHWOOD DRCAME	8331 PROVENCIA CTFORT MYERS, FL 33912	SFA1	$1,048.67	$1,667.26	$2,715.93
09-45-25-P4-00100.0460	BAKER BONNIE T + JOHN M IV8327 PROVENCIA	8327 PROVENCIA CTFORT MYERS, FL 33912	SFA1	$1,048.67	$1,667.26	$2,715.93
09-45-25-P4-00100.0470	RATLIFF MARY E TRFOR MARY E RATLIFF TRUST	8323 PROVENCIA CTFORT MYERS, FL 33912	SFA1	$1,048.67	$1,667.26	$2,715.93
09-45-25-P4-00100.0480	DELUCA JUDITH A TRFOR JUDITH A DELUCA TR	8319 PROVENCIA CTFORT MYERS, FL 33912	SFA1	$1,048.67	$1,667.26	$2,715.93
09-45-25-P4-00100.0490	KEATON ROGER M TRFOR ROGER M KEATON TR	8315 PROVENCIA CTFORT MYERS, FL 33912	SFA1	$1,048.67	$1,667.26	$2,715.93
09-45-25-P4-00100.0500	FEIOCK KENNETH M TR +FEIOCK PHYLLIS A D T	8311 PROVENCIA CTFORT MYERS, FL 33912	SFA1	$1,048.67	$1,667.26	$2,715.93
09-45-25-P4-00100.0510	BABBIN BRIAN A8307 PROVENCIA CTFORT MYE	8307 PROVENCIA CTFORT MYERS, FL 33912	SFA1	$1,048.67	$1,667.26	$2,715.93
09-45-25-P4-00100.0520	BLACK POINT ASSETS INC TRFOR 8303 PROVEN	8303 PROVENCIA CTFORT MYERS, FL 33912	SFA1	$1,048.67	$1,667.26	$2,715.93
09-45-25-P4-00100.0530	RAND LINDA M8299 PROVENCIA CTFORT MYER	8299 PROVENCIA CTFORT MYERS, FL 33912	SFA1	$1,048.67	$1,667.26	$2,715.93
09-45-25-P4-00100.0540	MICHAEL LOUIS SEVERSON TRUST13078 CRAN	8295 PROVENCIA CTFORT MYERS, FL 33912	SFA1	$1,048.67	$1,667.26	$2,715.93
09-45-25-P4-00100.0550	RALPH GEORGE E + KATHRYN M TRFOR RALPH	8291 PROVENCIA CTFORT MYERS, FL 33912	SFA1	$1,048.67	$1,667.26	$2,715.93
09-45-25-P4-00100.0560	8287 PROVENCIA PROPERTIES LLCMARK SUNA	8287 PROVENCIA CTFORT MYERS, FL 33912	SFA1	$1,048.67	$1,667.26	$2,715.93
09-45-25-P4-00100.0570	PALIANI RICHARD +THOMAS DANIEL J/T1 RIVE	8283 PROVENCIA CTFORT MYERS, FL 33912	SFA1	$1,048.67	$1,667.26	$2,715.93
09-45-25-P4-00100.0580	O'DONNELL MICHAEL TRFOR MICHAEL O'DONN	8279 PROVENCIA CTFORT MYERS, FL 33912	SFA1	$1,048.67	$1,667.26	$2,715.93
09-45-25-P4-00100.0590	ALLAN GEORGE R & DIANE M7 STONEHEDGE D	8275 PROVENCIA CTFORT MYERS, FL 33912	SFA1	$1,048.67	$1,667.26	$2,715.93
09-45-25-P4-00100.0600	HYATT PAUL TRFOR PAUL HYATT TRUST335 S NA	8271 PROVENCIA CTFORT MYERS, FL 33912	SFA1	$1,048.67	$1,667.26	$2,715.93
09-45-25-P4-00100.0610	JOHNSON ROBERT W TR +DEMMERLE DANIEL H	8267 PROVENCIA CTFORT MYERS, FL 33912	SFA1	$1,048.67	$1,667.26	$2,715.93
09-45-25-P4-00100.0620	KRASNIEWSKI WITOLD S+ LIDIA26 BRIARWOOD	8263 PROVENCIA CTFORT MYERS, FL 33912	SFA1	$1,048.67	$1,667.26	$2,715.93
09-45-25-P4-00100.0630	WIEST PAUL H8259 PROVENCIA CTFORT MYERS	8259 PROVENCIA CTFORT MYERS, FL 33912	SFA1	$1,048.67	$1,667.26	$2,715.93
09-45-25-P4-00100.0640	WENDEL CHARLENE A + MARTINSEN SUZANNE	8255 PROVENCIA CTFORT MYERS, FL 33912	SFA1	$1,048.67	$1,667.26	$2,715.93
09-45-25-P4-00100.0650	BAGDASARIAN CAROL8251 PROVENCIA CTFOR	8251 PROVENCIA CTFORT MYERS, FL 33912	SFA1	$1,048.67	$1,667.26	$2,715.93
09-45-25-P4-00100.0660	WIGHTMAN ROBERT R TRFOR ROBERT + BARBA	8247 PROVENCIA CTFORT MYERS, FL 33912	SFA1	$1,048.67	$1,667.26	$2,715.93
09-45-25-P4-00100.0670	HABERKORN CRAIG + AMY8243 PROVENCIA CT	8243 PROVENCIA CTFORT MYERS, FL 33912	SFA1	$1,048.67	$1,667.26	$2,715.93
09-45-25-P4-00100.0680	DELLAVOLPE DANIEL J & DELLAVOLPE DENISE2	8239 PROVENCIA CTFORT MYERS, FL 33912	SFA1	$1,048.67	$1,667.26	$2,715.93
09-45-25-P4-00100.0690	VINSON THOMAS G TR +VINSON BARBARA W T	8235 PROVENCIA CTFORT MYERS, FL 33912	SFA1	$1,048.67	$1,667.26	$2,715.93
09-45-25-P4-00100.0700	SCHAPER-BLOUGH MARY8231 PROVENCIA CTF	8231 PROVENCIA CTFORT MYERS, FL 33912	SFA1	$1,048.67	$1,667.26	$2,715.93
09-45-25-P4-00100.0730	DAMON JACK G & DEBORAH M8236 PROVENCIA	8236 PROVENCIA CTFORT MYERS, FL 33912	SFA1	$1,048.67	$1,667.26	$2,715.93
09-45-25-P4-00100.0740	CASCONE MICHAEL E & CASCONE NICOLE L824	8244 PROVENCIA CTFORT MYERS, FL 33912	SFA1	$1,048.67	$1,667.26	$2,715.93
09-45-25-P4-00100.0750	BURKE ROBERT P + LORI M8248 PROVENCIA CT	8248 PROVENCIA CTFORT MYERS, FL 33912	SFA1	$1,048.67	$1,667.26	$2,715.93
09-45-25-P4-00100.0760	SOWERBY ROBERT M JR & SOWERBY MARILYN	8260 PROVENCIA CTFORT MYERS, FL 33912	SFA1	$1,048.67	$1,667.26	$2,715.93
09-45-25-P4-00100.0770	R AND G DEVELOPMENT LLC1024 PINE LAKE C	8272 PROVENCIA CTFORT MYERS, FL 33912	SFA1	$1,048.67	$1,667.26	$2,715.93
09-45-25-P4-00100.0780	HELMSTAEDTER ROBERT KIRK JR & CAVOLI JO	8274 PROVENCIA CTFORT MYERS, FL 33912	SFA1	$1,048.67	$1,667.26	$2,715.93
09-45-25-P4-00100.0790	ZASLAVSKAYA VALERIA 80% +KUKIN YURIY Z 2	8276 PROVENCIA CTFORT MYERS, FL 33912	SFA1	$1,048.67	$1,667.26	$2,715.93
09-45-25-P4-00100.0800	PHILIPPO HANS F + HYACINTHA P929 HUMES RI	8280 PROVENCIA CTFORT MYERS, FL 33912	SFA1	$1,048.67	$1,667.26	$2,715.93
09-45-25-P4-00100.0810	LEDIN THOMAS M + COLLEEN M TR FOR THOMA	8284 PROVENCIA CTFORT MYERS, FL 33912	SFA1	$1,048.67	$1,667.26	$2,715.93
09-45-25-P4-00100.0820	DISTEFANO ALAN J19 SPRINGDALE RDCROMWE	8300 PROVENCIA CTFORT MYERS, FL 33912	SFA1	$1,048.67	$1,667.26	$2,715.93
09-45-25-P4-00100.0830	LEWIS BRIAN5148 PARK AVMINNEAPOLIS MN, 5	8314 PROVENCIA CTFORT MYERS, FL 33912	SFA1	$1,048.67	$1,667.26	$2,715.93
09-45-25-P4-00100.0840	LAU DAVID S TRFOR DAVID LAU TRUST15762 CI	8328 PROVENCIA CTFORT MYERS, FL 33912	SFA1	$1,048.67	$1,667.26	$2,715.93
09-45-25-P4-00100.0850	SANDLER LARRY7 COMANCHE CTKATONAH NY	8332 PROVENCIA CTFORT MYERS, FL 33912	SFA1	$1,048.67	$1,667.26	$2,715.93
09-45-25-P4-00100.0860	CELANO MICHAEL7680 MULBERRY CTNAPLES F	8334 PROVENCIA CTFORT MYERS, FL 33912	SFA1	$1,048.67	$1,667.26	$2,715.93
09-45-25-P4-00100.0870	VALDESOLO ERNESTO +CASCIO ROSARIO T/C9 S	8336 PROVENCIA CTFORT MYERS, FL 33912	SFA1	$1,048.67	$1,667.26	$2,715.93
09-45-25-P4-00100.0880	BORON LANE + STEFANIE H8338 PROVENCIA CT	8338 PROVENCIA CTFORT MYERS, FL 33912	SFA1	$1,048.67	$1,667.26	$2,715.93
09-45-25-P4-00100.0890	PATEL RAKESH10960 HARMONY PARK DRBONIT	8342 PROVENCIA CTFORT MYERS, FL 33912	SFA1	$1,048.67	$1,667.26	$2,715.93
09-45-25-P4-00100.0900	JOHNSON NOEL M & CINDY R550 25TH AVE NSA	8346 PROVENCIA CTFORT MYERS, FL 33912	SFA1	$1,048.67	$1,667.26	$2,715.93
09-45-25-P4-00100.0910	M D EMERY REVOCABLE MARITAL TR8350 PRO	8350 PROVENCIA CTFORT MYERS, FL 33912	SFA1	$1,048.67	$1,667.26	$2,715.93
09-45-25-P4-0010A.0400	PASEO CDDRIZZETTA & COMPANY INC12750 CIT	RIGHT OF WAYFORT MYERS, FL	0	$0.00	$0.00	$0.00
09-45-25-P4-0010A.0500	PASEO CDDRIZZETTA & COMPANY INC12750 CIT	RIGHT OF WAYFORT MYERS, FL	0	$0.00	$0.00	$0.00
09-45-25-P4-0010C.0010	PASEO CDDRIZZETTA & COMPANY INC12750 CIT	SUBMERGEDFORT MYERS, FL	0	$0.00	$0.00	$0.00
09-45-25-P4-0010C.0020	PASEO CDDRIZZETTA & COMPANY INC12750 CIT	SUBMERGEDFORT MYERS, FL	0	$0.00	$0.00	$0.00
09-45-25-P4-0010C.0030	PASEO CDDRIZZETTA & COMPANY INC12750 CIT	SUBMERGEDFORT MYERS, FL	0	$0.00	$0.00	$0.00
09-45-25-P4-0010C.0040	PASEO CDDRIZZETTA & COMPANY INC12750 CIT	SUBMERGEDFORT MYERS, FL	0	$0.00	$0.00	$0.00
09-45-25-P4-0010C.0050	PASEO CDDRIZZETTA & COMPANY INC12750 CIT	SUBMERGEDFORT MYERS, FL	0	$0.00	$0.00	$0.00
09-45-25-P4-0010E.0050	PASEO CDDRIZZETTA & COMPANY INC12750 CIT	PASEO C/EFORT MYERS, FL	0	$0.00	$0.00	$0.00

PASEO COMMUNITY DEVELOPMENT DISTRICT
2019 ASSESSMENT LIEN ROLL (UNIFORM METHOD)

STRAP	Owner	Site Address	LU	SERIES 2018 DEBT SERVICE	O&M	TOTAL
09-45-25-P4-0010E.0060	PASEO CDDRIZZETTA & COMPANY INC12750 CIT	PASEO C/EFORT MYERS, FL	0	$0.00	$0.00	$0.00
09-45-25-P4-00200.0101	SONGRADY VICTOR C & SONGRADY ILDIKO M8	8132 BIBIANA WAY 101FORT MYERS, FL 33912	MFA1	$524.34	$1,742.36	$2,266.70
09-45-25-P4-00200.0102	DERMODY JOSEPH PAUL JR + DERMODY LAURI	8132 BIBIANA WAY 102FORT MYERS, FL 33912	MFA2	$524.34	$1,742.36	$2,266.70
09-45-25-P4-00200.0103	LAZARUS JEFFREY BRIAN4721 41ST ST APT 4FSU	8132 BIBIANA WAY 103FORT MYERS, FL 33912	MFA1	$524.34	$1,742.36	$2,266.70
09-45-25-P4-00200.0104	ANDERSON RICHARD +ANDERSON ANNA J/T818	8132 BIBIANA WAY 104FORT MYERS, FL 33912	MFA1	$524.34	$1,742.36	$2,266.70
09-45-25-P4-00200.0201	SCHIAVOLIN SEAN J + JARIN N5706 PARKWOOD	8116 BIBIANA WAY 201FORT MYERS, FL 33912	MFA1	$524.34	$1,742.36	$2,266.70
09-45-25-P4-00200.0202	ELZER ROBERT W + LAUREL J4133 HEYWARD PL	8116 BIBIANA WAY 202FORT MYERS, FL 33912	MFA1	$524.34	$1,742.36	$2,266.70
09-45-25-P4-00200.0203	CAPISTRANO INVESTMENT LLCPO BOX 1484BO	8116 BIBIANA WAY 203FORT MYERS, FL 33912	MFA1	$524.34	$1,742.36	$2,266.70
09-45-25-P4-00200.0204	NOY IAN +ADLER LYNDA H/W8116 BIBIANA WAY	8116 BIBIANA WAY 204FORT MYERS, FL 33912	MFA1	$524.34	$1,742.36	$2,266.70
09-45-25-P4-00200.0301	PASEO PARTNERS LLC736 CRAB THICKET LNSAI	8163 BIBIANA WAY 301FORT MYERS, FL 33912	MFA1	$524.34	$1,742.36	$2,266.70
09-45-25-P4-00200.0302	BUSHKO RENATA G + DARIUSZ A4 LAMPLIGHTE	8163 BIBIANA WAY 302FORT MYERS, FL 33912	MFA1	$524.34	$1,742.36	$2,266.70
09-45-25-P4-00200.0303	PIPER ROY WILLIAM +PIPER ELAINE FREDA J/TE	8163 BIBIANA WAY 303FORT MYERS, FL 33912	MFA1	$524.34	$1,742.36	$2,266.70
09-45-25-P4-00200.0304	DOLBY WILLIAM MICHAEL & MCGOVERN MOLL	8163 BIBIANA WAY 304FORT MYERS, FL 33912	MFA1	$524.34	$1,742.36	$2,266.70
09-45-25-P4-00200.0305	METZ DOUGLAS E + SUE A3842 DEER VALLEY LN	8163 BIBIANA WAY 305FORT MYERS, FL 33912	MFA1	$524.34	$1,742.36	$2,266.70
09-45-25-P4-00200.0306	DEWERFF CHRISTINA L +WHALEN BRADLEY J W	8163 BIBIANA WAY 306FORT MYERS, FL 33912	MFA1	$524.34	$1,742.36	$2,266.70
09-45-25-P4-00200.0307	KIRKMAN DWAYNE +KIRKMAN CHRISTI L J/T13	8163 BIBIANA WAY 307FORT MYERS, FL 33912	MFA1	$524.34	$1,742.36	$2,266.70
09-45-25-P4-00200.0308	KEYES BRENT F + JO-ANNA L251 GARDEN RDBE	8163 BIBIANA WAY 308FORT MYERS, FL 33912	MFA1	$524.34	$1,742.36	$2,266.70
09-45-25-P4-00200.0309	8163 BIBIANA LLC1001 GREEN VALLEY RDNEW V	8163 BIBIANA WAY 309FORT MYERS, FL 33912	MFA1	$524.34	$1,742.36	$2,266.70
09-45-25-P4-00200.0310	DAWSON PAUL R + AMY D6084 WINNEBAGO STC	8163 BIBIANA WAY 310FORT MYERS, FL 33912	MFA1	$524.34	$1,742.36	$2,266.70
09-45-25-P4-00200.0401	AMATO ANTHONY & MARY230 SCENIC CTCHESI	8209 BIBIANA WAY 401FORT MYERS, FL 33912	MFA1	$524.34	$1,742.36	$2,266.70
09-45-25-P4-00200.0402	CASIMIRO GINA M & MICHAEL H1125 CRYSTAL I	8209 BIBIANA WAY 402FORT MYERS, FL 33912	MFA1	$524.34	$1,742.36	$2,266.70
09-45-25-P4-00200.0403	WOODALL CHANTELLE1137 COUNTY ROAD 22E	8209 BIBIANA WAY 403FORT MYERS, FL 33912	MFA1	$524.34	$1,742.36	$2,266.70
09-45-25-P4-00200.0404	JSA LLC10471 VIA LAMBARDIA FORT MYERS FL,	8209 BIBIANA WAY 404FORT MYERS, FL 33912	MFA1	$524.34	$1,742.36	$2,266.70
09-45-25-P4-00200.0405	KOHLI CHANDER M + KAREN LEE2200 PINEHUR	8209 BIBIANA WAY 405FORT MYERS, FL 33912	MFA1	$524.34	$1,742.36	$2,266.70
09-45-25-P4-00200.0406	VANDERVEER GORDON + ANITA K TRFOR GORD	8209 BIBIANA WAY 406FORT MYERS, FL 33912	MFA1	$524.34	$1,742.36	$2,266.70
09-45-25-P4-00200.0407	PLATT MICHAEL C +GALLOWAY RICK D T/C518 N	8209 BIBIANA WAY 407FORT MYERS, FL 33912	MFA1	$524.34	$1,742.36	$2,266.70
09-45-25-P4-00200.0408	MORANO RICHARD + DOREEN162 PINE NECK AV	8209 BIBIANA WAY 408FORT MYERS, FL 33912	MFA1	$524.34	$1,742.36	$2,266.70
09-45-25-P4-00200.0409	FALCONE NEIL J + JULIE108 OVERLOOK DREAST	8209 BIBIANA WAY 409FORT MYERS, FL 33912	MFA1	$524.34	$1,742.36	$2,266.70
09-45-25-P4-00200.0410	STEPHENSON TIMOTHY A TRFOR GEORGE V CO	8209 BIBIANA WAY 410FORT MYERS, FL 33912	MFA1	$524.34	$1,742.36	$2,266.70
09-45-25-P4-00200.0501	MCCARTNEY KIMBERLY8067 BIBIANA WAY #501	8067 BIBIANA WAY 501FORT MYERS, FL 33912	MFA1	$524.34	$1,742.36	$2,266.70
09-45-25-P4-00200.0502	LOLISA LLC TRFOR PIC 3 LAND TRUST2293 FOXI	8067 BIBIANA WAY 502FORT MYERS, FL 33912	MFA1	$524.34	$1,742.36	$2,266.70
09-45-25-P4-00200.0503	WIMMERS ALEXANDER8067 BIBIANA WAY #503I	8067 BIBIANA WAY 503FORT MYERS, FL 33912	MFA1	$524.34	$1,742.36	$2,266.70
09-45-25-P4-00200.0504	MCCARRON ROBERT LEWLAN8067 BIBIANA WA	8067 BIBIANA WAY 504FORT MYERS, FL 33912	MFA1	$524.34	$1,742.36	$2,266.70
09-45-25-P4-00200.0505	COVIELLO PHYLLIS M TRFOR PHYLLIS M COVIE	8067 BIBIANA WAY 505FORT MYERS, FL 33912	MFA1	$524.34	$1,742.36	$2,266.70
09-45-25-P4-00200.0506	SAMSON EMMANUEL P + LYNDA M8067 BIBIANA	8067 BIBIANA WAY 506FORT MYERS, FL 33912	MFA1	$524.34	$1,742.36	$2,266.70
09-45-25-P4-00200.0507	BROWNLEE CHRISTOPHER I8067 BIBIANA WAY A	8067 BIBIANA WAY 507FORT MYERS, FL 33912	MFA1	$524.34	$1,742.36	$2,266.70
09-45-25-P4-00200.0508	STROHM JOHN M + BELMONT MARY ELIZABETH	8067 BIBIANA WAY 508FORT MYERS, FL 33912	MFA1	$524.34	$1,742.36	$2,266.70
09-45-25-P4-00200.0509	TORA DEVELOPMENT CO LLC7580 KNIGHTWINC	8067 BIBIANA WAY 509FORT MYERS, FL 33912	MFA1	$524.34	$1,742.36	$2,266.70
09-45-25-P4-00200.0510	OWEN MARSHALL D & DONNA M TRFOR MARSH	8067 BIBIANA WAY 510FORT MYERS, FL 33912	MFA1	$524.34	$1,742.36	$2,266.70
09-45-25-P4-00200.0601	8091 BIBIANA WAY LLC2180 CONNER COVE LND	8091 BIBIANA WAY 601FORT MYERS, FL 33912	MFA1	$524.34	$1,742.36	$2,266.70
09-45-25-P4-00200.0602	PESTALOZZI STEPHAN + DEBORAHTELLSTRASS	8091 BIBIANA WAY 602FORT MYERS, FL 33912	MFA1	$524.34	$1,742.36	$2,266.70
09-45-25-P4-00200.0603	HALL THOMAS M8091 BIBIANA WAY # 603FORT M	8091 BIBIANA WAY 603FORT MYERS, FL 33912	MFA1	$524.34	$1,742.36	$2,266.70
09-45-25-P4-00200.0604	CURCIO JOHN +CURCIO MARGARET +CURCIO	8091 BIBIANA WAY 604FORT MYERS, FL 33912	MFA1	$524.34	$1,742.36	$2,266.70
09-45-25-P4-00200.0605	SCHILLER KIMBERLEY8091 BIBIANA WAY #605F	8091 BIBIANA WAY 605FORT MYERS, FL 33912	MFA1	$524.34	$1,742.36	$2,266.70
09-45-25-P4-00200.0606	EUBANKS RICHARD S + KATHLEEN910 OAKLAN	8091 BIBIANA WAY 606FORT MYERS, FL 33912	MFA1	$524.34	$1,742.36	$2,266.70
09-45-25-P4-00200.0607	PRIDNIA JOHN PATRICK & PRIDNIA MICHELLE A	8091 BIBIANA WAY 607FORT MYERS, FL 33912	MFA1	$524.34	$1,742.36	$2,266.70
09-45-25-P4-00200.0608	BARNES CAROL A8091 BIBIANA WAY #608FORT M	8091 BIBIANA WAY 608FORT MYERS, FL 33912	MFA1	$524.34	$1,742.36	$2,266.70
09-45-25-P4-00200.0609	AMANDOLA MICHAEL + SUSAN41 PEACOCK LN	8091 BIBIANA WAY 609FORT MYERS, FL 33912	MFA1	$524.34	$1,742.36	$2,266.70
09-45-25-P4-00200.0610	WILSON GREGORY D & WILSON KIMBERLY R49	8091 BIBIANA WAY 610FORT MYERS, FL 33912	MFA1	$524.34	$1,742.36	$2,266.70
09-45-25-P4-00200.0701	JONES GREGORY A TRFOR GREGORY A JONES T	8243 BIBIANA WAY 701FORT MYERS, FL 33912	MFA1	$524.34	$1,742.36	$2,266.70
09-45-25-P4-00200.0702	POLTINNIKOV IGOR M + NATALIE5295 LAKEMON	8243 BIBIANA WAY 702FORT MYERS, FL 33912	MFA1	$524.34	$1,742.36	$2,266.70
09-45-25-P4-00200.0703	CHERKIN BRAD J +CHERKIN TERRI L J/T8243 BIB	8243 BIBIANA WAY 703FORT MYERS, FL 33912	MFA1	$524.34	$1,742.36	$2,266.70
09-45-25-P4-00200.0704	YOUNG J D +YOUNG LYNN T/C1503 BRAMOOR D	8243 BIBIANA WAY 704FORT MYERS, FL 33912	MFA1	$524.34	$1,742.36	$2,266.70
09-45-25-P4-00200.0705	JOHN D OROSS TRUST9888 COLONIAL WALK NE	8243 BIBIANA WAY 705FORT MYERS, FL 33912	MFA1	$524.34	$1,742.36	$2,266.70

PASEO COMMUNITY DEVELOPMENT DISTRICT
2019 ASSESSMENT LIEN ROLL (UNIFORM METHOD)

STRAP	Owner	Site Address	LU	SERIES 2018 DEBT SERVICE	O&M	TOTAL
09-45-25-P4-00200.0706	J + S BUILDING CO9658 N 1175 WMONTICELLO IN	8243 BIBIANA WAY 706FORT MYERS, FL 33912	MFA1	$524.34	$1,742.36	$2,266.70
09-45-25-P4-00200.0801	KELLY JANE ANN8281 BIBIANA WAY #801FORT M	8281 BIBIANA WAY 801FORT MYERS, FL 33912	MFA1	$524.34	$1,742.36	$2,266.70
09-45-25-P4-00200.0802	RAGER DENNY G JR +BIRDSONG-RAGER JENNIF	8281 BIBIANA WAY 802FORT MYERS, FL 33912	MFA1	$524.34	$1,742.36	$2,266.70
09-45-25-P4-00200.0803	CALDWELL MAURICE A + JOAN S8281 BIBIANA V	8281 BIBIANA WAY 803FORT MYERS, FL 33912	MFA1	$524.34	$1,742.36	$2,266.70
09-45-25-P4-00200.0804	LAZZARETTO NICHOLAS C + NICOLE604 MCKIN	8281 BIBIANA WAY 804FORT MYERS, FL 33912	MFA1	$524.34	$1,742.36	$2,266.70
09-45-25-P4-00200.0805	WASHBURN MICHAEL & JENNIFER12691 CHART	8281 BIBIANA WAY 805FORT MYERS, FL 33912	MFA1	$524.34	$1,742.36	$2,266.70
09-45-25-P4-00200.0806	BISIGNANI MARGARET E8281 BIBIANA WAY #806	8281 BIBIANA WAY 806FORT MYERS, FL 33912	MFA1	$524.34	$1,742.36	$2,266.70
09-45-25-P4-00200.0901	SCHWINGHAMMER PAUL C & SCHWINGHAMME	11945 ALEGRIA ST 901FORT MYERS, FL 33912	MFA1	$524.34	$1,742.36	$2,266.70
09-45-25-P4-00200.0902	STACEY STEVEN A TR +STACEY DARLENE B TRI	11945 ALEGRIA ST 902FORT MYERS, FL 33912	MFA1	$524.34	$1,742.36	$2,266.70
09-45-25-P4-00200.0903	ABBOTT ARLETTE V11945 ALEGRIA ST # 903FOR	11945 ALEGRIA ST 903FORT MYERS, FL 33912	MFA1	$524.34	$1,742.36	$2,266.70
09-45-25-P4-00200.0904	SOUTHWICK ALAN E TRFOR ALAN E SOUTHWIC	11945 ALEGRIA ST 904FORT MYERS, FL 33912	MFA1	$524.34	$1,742.36	$2,266.70
09-45-25-P4-00200.0905	ARLETTE ABBOTT PLLC11945 ALEGRIA ST #905F	11945 ALEGRIA ST 905FORT MYERS, FL 33912	MFA1	$524.34	$1,742.36	$2,266.70
09-45-25-P4-00200.0906	HARRIS TIMOTHY J + RONDA303 OSPREY PASSH	11945 ALEGRIA ST 906FORT MYERS, FL 33912	MFA1	$524.34	$1,742.36	$2,266.70
09-45-25-P4-00200.1001	LERMER PETER W + MARTINE C951 N WATERWA	8312 BIBIANA WAY 1001FORT MYERS, FL 33912	MFA1	$524.34	$1,742.36	$2,266.70
09-45-25-P4-00200.1002	CHADWICK WAYNE +REED STUART T/C19 VENIC	8312 BIBIANA WAY 1002FORT MYERS, FL 33912	MFA1	$524.34	$1,742.36	$2,266.70
09-45-25-P4-00200.1003	WILLIAMS WILLIAM H III + WILLIAMS BETH G HA	8312 BIBIANA WAY 1003FORT MYERS, FL 33912	MFA1	$524.34	$1,742.36	$2,266.70
09-45-25-P4-00200.1004	SCHOEN GERALD A + KATHLEEN M14587 KILDA	8312 BIBIANA WAY 1004FORT MYERS, FL 33912	MFA1	$524.34	$1,742.36	$2,266.70
09-45-25-P4-00200.1101	SANTANA YASMILE10471 VIA LOMBARDIA CTFO	8340 DELICIA ST 1101FORT MYERS, FL 33912	MFA1	$524.34	$1,742.36	$2,266.70
09-45-25-P4-00200.1102	GIBENS CATHERINE MEGHAN8340 DELICIA ST #	8340 DELICIA ST 1102FORT MYERS, FL 33912	MFA1	$524.34	$1,742.36	$2,266.70
09-45-25-P4-00200.1103	MULHOLLAND MICHAEL8340 DELICIA ST UNIT 1	8340 DELICIA ST 1103FORT MYERS, FL 33912	MFA1	$524.34	$1,742.36	$2,266.70
09-45-25-P4-00200.1104	BABER MARK D + LINDA L11332 PASEO DRFORT	8340 DELICIA ST 1104FORT MYERS, FL 33912	MFA1	$524.34	$1,742.36	$2,266.70
09-45-25-P4-00200.1105	LONG GEORGE L JR + PATRICIA 1928 SE 32 ND TE	8340 DELICIA ST 1105FORT MYERS, FL 33912	MFA1	$524.34	$1,742.36	$2,266.70
09-45-25-P4-00200.1106	SHIMER ROBERT C +FINE BOBBIE H/W8340 DELI	8340 DELICIA ST 1106FORT MYERS, FL 33912	MFA1	$524.34	$1,742.36	$2,266.70
09-45-25-P4-00200.1201	SHERWELL CHERYL L/E11990 ADONCIA WAY #12	11990 ADONCIA WAY 1201FORT MYERS, FL 33912	MFA1	$524.34	$1,742.36	$2,266.70
09-45-25-P4-00200.1202	ANTHONY GAILE H11990 ADONCIA WAY #1202FC	11990 ADONCIA WAY 1202FORT MYERS, FL 33912	MFA1	$524.34	$1,742.36	$2,266.70
09-45-25-P4-00200.1203	MCCUE JENNIFER L11990 ADONCIA WAY # 1203F	11990 ADONCIA WAY 1203FORT MYERS, FL 33912	MFA1	$524.34	$1,742.36	$2,266.70
09-45-25-P4-00200.1204	PHILIPPO HANS F + HYACINTHA P7450 INDUSTR	11990 ADONCIA WAY 1204FORT MYERS, FL 33912	MFA1	$524.34	$1,742.36	$2,266.70
09-45-25-P4-00200.1301	1301 MANAGEMENT LLCPO BOX 431BOHEMIA N	8323 DELICIA ST 1301FORT MYERS, FL 33912	MFA1	$524.34	$1,742.36	$2,266.70
09-45-25-P4-00200.1302	DITTMEIER TIMOTHY + MARIE8323 DELICIA ST #	8323 DELICIA ST 1302FORT MYERS, FL 33912	MFA1	$524.34	$1,742.36	$2,266.70
09-45-25-P4-00200.1303	MCCARTHY JOHN R & BEVERLY A8323 DELICIA	8323 DELICIA ST 1303FORT MYERS, FL 33912	MFA1	$524.34	$1,742.36	$2,266.70
09-45-25-P4-00200.1304	CLASEN LARS + LENE8323 DELICIA ST #1304FOR	8323 DELICIA ST 1304FORT MYERS, FL 33912	MFA1	$524.34	$1,742.36	$2,266.70
09-45-25-P4-00200.1305	GRAY JEAN Y811 TILLSON RDNORTH MYRTLE B	8323 DELICIA ST 1305FORT MYERS, FL 33912	MFA1	$524.34	$1,742.36	$2,266.70
09-45-25-P4-00200.1306	BOWERS PAUL A8323 DELICIA ST #1306FORT MY	8323 DELICIA ST 1306FORT MYERS, FL 33912	MFA1	$524.34	$1,742.36	$2,266.70
09-45-25-P4-00200.1307	STERBA CHARLES J III & KELSEY JULIA E8323 DI	8323 DELICIA ST 1307FORT MYERS, FL 33912	MFA1	$524.34	$1,742.36	$2,266.70
09-45-25-P4-00200.1308	QUIBELL THERESA8323 DELICIA ST APT 1308FOR	8323 DELICIA ST 1308FORT MYERS, FL 33912	MFA1	$524.34	$1,742.36	$2,266.70
09-45-25-P4-00200.1309	IWDC LLCPO BOX 384SAG HARBOR NY, 11963	8323 DELICIA ST 1309FORT MYERS, FL 33912	MFA1	$524.34	$1,742.36	$2,266.70
09-45-25-P4-00200.1310	DELIA SALVATORE A + REGINA8323 DELICIA ST #	8323 DELICIA ST 1310FORT MYERS, FL 33912	MFA1	$524.34	$1,742.36	$2,266.70
09-45-25-P4-00200.1401	BLEW PHILIP GORDON +ZETTEL LENORE A H/W1	8349 DELICIA ST 1401FORT MYERS, FL 33912	MFA1	$524.34	$1,742.36	$2,266.70
09-45-25-P4-00200.1402	HALL JENNIFER W8349 DELICIA ST # 1402FORT M	8349 DELICIA ST 1402FORT MYERS, FL 33912	MFA1	$524.34	$1,742.36	$2,266.70
09-45-25-P4-00200.1403	JEZDIC DANILO D & DUSANKA + KAVANAUGH G	8349 DELICIA ST 1403FORT MYERS, FL 33912	MFA1	$524.34	$1,742.36	$2,266.70
09-45-25-P4-00200.1404	1404 MANAGEMENT LLCPO BOX 431BOHEMIA N	8349 DELICIA ST 1404FORT MYERS, FL 33912	MFA1	$524.34	$1,742.36	$2,266.70
09-45-25-P4-00200.1405	FERGUSON GERARD R + JOAN KPO BOX 8MABO	8349 DELICIA ST 1405FORT MYERS, FL 33912	MFA1	$524.34	$1,742.36	$2,266.70
09-45-25-P4-00200.1406	LLOYD WAYNE + CHRISTINE599 DEER RUN DRW	8349 DELICIA ST 1406FORT MYERS, FL 33912	MFA1	$524.34	$1,742.36	$2,266.70
09-45-25-P4-00200.1407	BROTHERS FOUR LLC6 CARRIAGE LNNEW FAIR	8349 DELICIA ST 1407FORT MYERS, FL 33912	MFA1	$524.34	$1,742.36	$2,266.70
09-45-25-P4-00200.1408	ALTHOFF JARED J & ALI D11011 PARROT DRPEOS	8349 DELICIA ST 1408FORT MYERS, FL 33912	MFA1	$524.34	$1,742.36	$2,266.70
09-45-25-P4-00200.1409	BARANIK DENNIS R & KAREN M TRFOR DENNIS	8349 DELICIA ST 1409FORT MYERS, FL 33912	MFA1	$524.34	$1,742.36	$2,266.70
09-45-25-P4-00200.1410	JAMES ANTHONY & PAMELA8349 DELICIA ST #1	8349 DELICIA ST 1410FORT MYERS, FL 33912	MFA1	$524.34	$1,742.36	$2,266.70
09-45-25-P4-00200.1501	MOZENA TERRY L + MOZENA ANGELA A1036 W	8346 ESPERANZA ST 1501FORT MYERS, FL 33912	MFA1	$524.34	$1,742.36	$2,266.70
09-45-25-P4-00200.1502	KROEKER RANDALL +WEEKS SHEILA H/W180 SH	8346 ESPERANZA ST 1502FORT MYERS, FL 33912	MFA1	$524.34	$1,742.36	$2,266.70
09-45-25-P4-00200.1503	DONOVAN HAROLD + CAROL38 MIDFIELD DRRC	8346 ESPERANZA ST 1503FORT MYERS, FL 33912	MFA1	$524.34	$1,742.36	$2,266.70
09-45-25-P4-00200.1504	RIPLEY THOMAS EPO BOX 239GUILFORD CT, 064	8346 ESPERANZA ST 1504FORT MYERS, FL 33912	MFA1	$524.34	$1,742.36	$2,266.70
09-45-25-P4-00200.1505	OSTERHOLM NICOLE12009 MOOREHOUSE PL FO	8346 ESPERANZA ST 1505FORT MYERS, FL 33912	MFA1	$524.34	$1,742.36	$2,266.70
09-45-25-P4-00200.1506	GIACOBELLO SCOTT M TR +GIACOBELLO MONI	8346 ESPERANZA ST 1506FORT MYERS, FL 33912	MFA1	$524.34	$1,742.36	$2,266.70
09-45-25-P4-00200.1507	REILLY KATHLEEN8346 ESPERANZA ST UNIT 150	8346 ESPERANZA ST 1507FORT MYERS, FL 33912	MFA1	$524.34	$1,742.36	$2,266.70

PASEO COMMUNITY DEVELOPMENT DISTRICT
2019 ASSESSMENT LIEN ROLL (UNIFORM METHOD)

STRAP	Owner	Site Address	LU	SERIES 2018 DEBT SERVICE	O&M	TOTAL
09-45-25-P4-00200.1508	KARATASSOS PANOS ELI & KARATASSOS MARY	8346 ESPERANZA ST 1508FORT MYERS, FL 33912	MFA1	$524.34	$1,742.36	$2,266.70
09-45-25-P4-00200.1509	SCRIBNER SUZANNE K8346 ESPERANZA ST#1509	8346 ESPERANZA ST 1509FORT MYERS, FL 33912	MFA1	$524.34	$1,742.36	$2,266.70
09-45-25-P4-00200.1510	OLIVER IAN + CATHRYN113 WATSON AVEOAKVI	8346 ESPERANZA ST 1510FORT MYERS, FL 33912	MFA1	$524.34	$1,742.36	$2,266.70
09-45-25-P4-00200.1601	MTGLQ INVESTORS LPRUSHMORE LOAN MGMT	8320 ESPERANZA ST 1601FORT MYERS, FL 33912	MFA1	$524.34	$1,742.36	$2,266.70
09-45-25-P4-00200.1602	PARRETT THOMAS G23520 ROAD 110OAKWOOD	8320 ESPERANZA ST 1602FORT MYERS, FL 33912	MFA1	$524.34	$1,742.36	$2,266.70
09-45-25-P4-00200.1603	CHOCHOLEK DARERN D TR +CHOCHOLEK DREV	8320 ESPERANZA ST 1603FORT MYERS, FL 33912	MFA1	$524.34	$1,742.36	$2,266.70
09-45-25-P4-00200.1604	STIRRETT GLENNA M6771 TILTON LAKE RDSUDI	8320 ESPERANZA ST 1604FORT MYERS, FL 33912	MFA1	$524.34	$1,742.36	$2,266.70
09-45-25-P4-00200.1605	KROEKER RANDALL180 SHERWOOD DROTTAWA	8320 ESPERANZA ST 1605FORT MYERS, FL 33912	MFA1	$524.34	$1,742.36	$2,266.70
09-45-25-P4-00200.1606	HICKS LYLE L + NANCY S8320 ESPERANZA ST #1	8320 ESPERANZA ST 1606FORT MYERS, FL 33912	MFA1	$524.34	$1,742.36	$2,266.70
09-45-25-P4-00200.1607	WILLIAMS JOHN M + SHEA D6478 CLEARY RDLIV	8320 ESPERANZA ST 1607FORT MYERS, FL 33912	MFA1	$524.34	$1,742.36	$2,266.70
09-45-25-P4-00200.1608	KENLIND HOLDINGS INC854 LAFFERTY AVELAS	8320 ESPERANZA ST 1608FORT MYERS, FL 33912	MFA1	$524.34	$1,742.36	$2,266.70
09-45-25-P4-00200.1609	WOODALL CHANTELLEPO BOX 398EMERYVILLE	8320 ESPERANZA ST 1609FORT MYERS, FL 33912	MFA1	$524.34	$1,742.36	$2,266.70
09-45-25-P4-00200.1610	TRUSTED REAL PROPERTY LLC409 NORTH MAIN	8320 ESPERANZA ST 1610FORT MYERS, FL 33912	MFA1	$524.34	$1,742.36	$2,266.70
09-45-25-P4-00200.1701	POLTINNIKOV IGOR + NATALIE5295 LAKEMONT	11882 ROCIO ST 1701FORT MYERS, FL 33912	MFA1	$524.34	$1,742.36	$2,266.70
09-45-25-P4-00200.1702	SCOTTO JOSEPH M11882 ROCIO ST # 1702FORT M	11882 ROCIO ST 1702FORT MYERS, FL 33912	MFA1	$524.34	$1,742.36	$2,266.70
09-45-25-P4-00200.1703	FRANCIS ROBERT G + ANN C11882 ROCIO ST #17	11882 ROCIO ST 1703FORT MYERS, FL 33912	MFA1	$524.34	$1,742.36	$2,266.70
09-45-25-P4-00200.1704	MARTINO ANTONIO + NICOLE352 HARRISON AV	11882 ROCIO ST 1704FORT MYERS, FL 33912	MFA1	$524.34	$1,742.36	$2,266.70
09-45-25-P4-00200.1705	MILLS DANIEL W & RACHELE L11882 ROCIO ST #	11882 ROCIO ST 1705FORT MYERS, FL 33912	MFA1	$524.34	$1,742.36	$2,266.70
09-45-25-P4-00200.1801	BERRY JENNIFER J +FARNUM SUSAN B J/TPO BC	11874 ROCIO ST 1801FORT MYERS, FL 33912	MFA1	$524.34	$1,742.36	$2,266.70
09-45-25-P4-00200.1802	DERMODY JOSEPH PAUL JR & DERMODY LAURI	11874 ROCIO ST 1802FORT MYERS, FL 33912	MFA1	$524.34	$1,742.36	$2,266.70
09-45-25-P4-00200.1803	HOWIE SUSAN K11874 ROCIO ST # 1803FORT MY	11874 ROCIO ST 1803FORT MYERS, FL 33912	MFA1	$524.34	$1,742.36	$2,266.70
09-45-25-P4-00200.1804	REYNOLDS PAUL + SHERRIE15037 CARRICK RD	11874 ROCIO ST 1804FORT MYERS, FL 33912	MFA1	$524.34	$1,742.36	$2,266.70
09-45-25-P4-00200.1901	MAGNOZZI ENZO +MAGNOZZI JEANNIE J/T11862	11862 ROCIO ST 1901FORT MYERS, FL 33912	MFA1	$524.34	$1,742.36	$2,266.70
09-45-25-P4-00200.1902	LAZARUS JEFFREY47-21 41ST ST APT 4FSUNNYS	11862 ROCIO ST 1902FORT MYERS, FL 33912	MFA1	$524.34	$1,742.36	$2,266.70
09-45-25-P4-00200.1903	JERABEK ALES11862 ROCIO ST APT 1903FORT MY	11862 ROCIO ST 1903FORT MYERS, FL 33912	MFA1	$524.34	$1,742.36	$2,266.70
09-45-25-P4-00200.1904	CLESCERI MICHAEL + MICHELLE TRFOR MICHA	11862 ROCIO ST 1904FORT MYERS, FL 33912	MFA1	$524.34	$1,742.36	$2,266.70
09-45-25-P4-00200.2001	UNKNOWN HEIRS OFLIND JANICE K + UNKNOW	11856 ROCIO ST 2001FORT MYERS, FL 33912	MFA1	$524.34	$1,742.36	$2,266.70
09-45-25-P4-00200.2002	2002 ROCIO MANAGEMENT LLCPO BOX 431BOH	11856 ROCIO ST 2002FORT MYERS, FL 33912	MFA1	$524.34	$1,742.36	$2,266.70
09-45-25-P4-00200.2003	DANDREA MICHAEL T + FAITH N702 DEMPSEY R	11856 ROCIO ST 2003FORT MYERS, FL 33912	MFA1	$524.34	$1,742.36	$2,266.70
09-45-25-P4-00200.2101	SOTO FERNANDO G SR + SALLY A11880 ADONCI	11880 ADONCIA WAY 2101FORT MYERS, FL 33912	MFA1	$524.34	$1,742.36	$2,266.70
09-45-25-P4-00200.2102	HERRERA HEATHER R TRFOR HEATHER R HERR	11880 ADONCIA WAY 2102FORT MYERS, FL 33912	MFA1	$524.34	$1,742.36	$2,266.70
09-45-25-P4-00200.2103	MAGNUSON MARK ROBERT & MAGNUSON DEB	11880 ADONCIA WAY 2103FORT MYERS, FL 33912	MFA1	$524.34	$1,742.36	$2,266.70
09-45-25-P4-00200.2104	STARCEVIC ANTHONY + CHRISTINA6 TIMBER C	11880 ADONCIA WAY 2104FORT MYERS, FL 33912	MFA1	$524.34	$1,742.36	$2,266.70
09-45-25-P4-00200.2105	SORIANO RAUL STA CRUZ TR +SORIANO MARIN	11880 ADONCIA WAY 2105FORT MYERS, FL 33912	MFA1	$524.34	$1,742.36	$2,266.70
09-45-25-P4-00200.2106	SWIECICKI BRIAN A + TINA15 KENSINGTON AVE	11880 ADONCIA WAY 2106FORT MYERS, FL 33912	MFA1	$524.34	$1,742.36	$2,266.70
09-45-25-P4-00200.2107	FIELD ALISON B11880 ADONCIA WAY #2107FORT	11880 ADONCIA WAY 2107FORT MYERS, FL 33912	MFA1	$524.34	$1,742.36	$2,266.70
09-45-25-P4-00200.2108	KEANE MICHAEL + JULIE145 LAGRANGE STWES	11880 ADONCIA WAY 2108FORT MYERS, FL 33912	MFA1	$524.34	$1,742.36	$2,266.70
09-45-25-P4-00200.2109	WENDEL THOMAS R + DERYL L23 DEERFIELD TI	11880 ADONCIA WAY 2109FORT MYERS, FL 33912	MFA1	$524.34	$1,742.36	$2,266.70
09-45-25-P4-00200.2110	STAPLETON ROBERT +STAPLETON KAREN J/T21	11880 ADONCIA WAY 2110FORT MYERS, FL 33912	MFA1	$524.34	$1,742.36	$2,266.70
09-45-25-P4-00200.2111	BENNETT MAXWELL +BENNETT CAROLYN J/T2	11880 ADONCIA WAY 2111FORT MYERS, FL 33912	MFA1	$524.34	$1,742.36	$2,266.70
09-45-25-P4-00200.2112	POIRIER CLAUDE106 CH MARC ANTOINEVAL DE	11880 ADONCIA WAY 2112FORT MYERS, FL 33912	MFA1	$524.34	$1,742.36	$2,266.70
09-45-25-P4-00200.2201	SMITH MARK TR +SMITH MICHELLE TRFOR MA	11866 ADONCIA WAY 2201FORT MYERS, FL 33912	MFA2	$524.34	$1,742.36	$2,266.70
09-45-25-P4-00200.2202	LEONARD MICHAEL11866 ADONCIA WAY #2202F	11866 ADONCIA WAY 2202FORT MYERS, FL 33912	MFA1	$524.34	$1,742.36	$2,266.70
09-45-25-P4-00200.2203	CHERNOFF GARY H +ANDERSON KIMBERLY E H	11866 ADONCIA WAY 2203FORT MYERS, FL 33912	MFA1	$524.34	$1,742.36	$2,266.70
09-45-25-P4-00200.2204	ESSL JOHN J + GRETCHEN A400 S ASH AVEGALL	11866 ADONCIA WAY 2204FORT MYERS, FL 33912	MFA2	$524.34	$1,742.36	$2,266.70
09-45-25-P4-00200.2205	SAGES PATTI L11866 ADONCIA WAY #2205FORT M	11866 ADONCIA WAY 2205FORT MYERS, FL 33912	MFA1	$524.34	$1,742.36	$2,266.70
09-45-25-P4-00200.2206	ROWE DONALD JR & RACHEL L11866 ADONCIA	11866 ADONCIA WAY 2206FORT MYERS, FL 33912	MFA2	$524.34	$1,742.36	$2,266.70
09-45-25-P4-00200.2207	JANDORF RICHARD11866 ADONCIA WAY#2207FC	11866 ADONCIA WAY 2207FORT MYERS, FL 33912	MFA2	$524.34	$1,742.36	$2,266.70
09-45-25-P4-00200.2208	LEGAULT MARC H TR +LABRECQUE JOHANNE T	11866 ADONCIA WAY 2208FORT MYERS, FL 33912	MFA1	$524.34	$1,742.36	$2,266.70
09-45-25-P4-00200.2209	MINOR MARC G +MINOR MICHELLE L J/T4430 W	11866 ADONCIA WAY 2209FORT MYERS, FL 33912	MFA2	$524.34	$1,742.36	$2,266.70
09-45-25-P4-00200.2210	MACKIE DAVID G + KAREN M11866 ADONCIA W	11866 ADONCIA WAY 2210FORT MYERS, FL 33912	MFA1	$524.34	$1,742.36	$2,266.70
09-45-25-P4-00200.2211	JOE MARE LLC16 WIMBLEDON WAYMARLTON N	11866 ADONCIA WAY 2211FORT MYERS, FL 33912	MFA2	$524.34	$1,742.36	$2,266.70
09-45-25-P4-00200.2212	LALONDE DENIS + COLALILLO-LALONDE FAUST	11866 ADONCIA WAY 2212FORT MYERS, FL 33912	MFA2	$524.34	$1,742.36	$2,266.70
09-45-25-P4-00200.2301	HAEFFNER SCOTT & BARBARA A4 BROCKETT R	11996 TULIO WAY 2301FORT MYERS, FL 33912	MFA1	$524.34	$1,742.36	$2,266.70

PASEO COMMUNITY DEVELOPMENT DISTRICT
2019 ASSESSMENT LIEN ROLL (UNIFORM METHOD)

STRAP	Owner	Site Address	LU	SERIES 2018 DEBT SERVICE	O&M	TOTAL
09-45-25-P4-00200.2302	SERINO CHRISTINE A + DANIEL A4 LEA CTGARN	11996 TULIO WAY 2302FORT MYERS, FL 33912	MFA1	$524.34	$1,742.36	$2,266.70
09-45-25-P4-00200.2303	TSITSOS GEORGE C TR +TSITSOS MONIKA R TR	11996 TULIO WAY 2303FORT MYERS, FL 33912	MFA1	$524.34	$1,742.36	$2,266.70
09-45-25-P4-00200.2304	BASTARACHE BARBARA A11996 TULIO WAY #23	11996 TULIO WAY 2304FORT MYERS, FL 33912	MFA1	$524.34	$1,742.36	$2,266.70
09-45-25-P4-00200.2305	WIGHTMAN ROBERT R TRFOR ROBERT + BARBA	11996 TULIO WAY 2305FORT MYERS, FL 33912	MFA1	$524.34	$1,742.36	$2,266.70
09-45-25-P4-00200.2306	PRICE CHARLES A + CHRISTINE A17 RICHARD PI	11996 TULIO WAY 2306FORT MYERS, FL 33912	MFA1	$524.34	$1,742.36	$2,266.70
09-45-25-P4-00200.2401	WHITE DEBRA J11980 TULIO WAY #2401FORT MY	11980 TULIO WAY 2401FORT MYERS, FL 33912	MFA1	$524.34	$1,742.36	$2,266.70
09-45-25-P4-00200.2402	ATADERO ARSENIO + JENNIFER55 S OAKLEAF R	11980 TULIO WAY 2402FORT MYERS, FL 33912	MFA1	$524.34	$1,742.36	$2,266.70
09-45-25-P4-00200.2403	DAHL CATHERINE M TRFOR CATHERINE M DAH	11980 TULIO WAY 2403FORT MYERS, FL 33912	MFA1	$524.34	$1,742.36	$2,266.70
09-45-25-P4-00200.2404	STITH JAMES A11980 TULIO WAY #2404FORT MY	11980 TULIO WAY 2404FORT MYERS, FL 33912	MFA1	$524.34	$1,742.36	$2,266.70
09-45-25-P4-00200.2405	PETERSON IVY +PETERSON MARK E J/T39 GRAS	11980 TULIO WAY 2405FORT MYERS, FL 33912	MFA1	$524.34	$1,742.36	$2,266.70
09-45-25-P4-00200.2406	VRIEZE KEVIN + KATHIE11450 CIRCLE RIDGE CT	11980 TULIO WAY 2406FORT MYERS, FL 33912	MFA1	$524.34	$1,742.36	$2,266.70
09-45-25-P4-00200.2501	DOEBELE PETER +BUCELWICZ THOMAS F J/T315	11964 TULIO WAY 2501FORT MYERS, FL 33912	MFA1	$524.34	$1,742.36	$2,266.70
09-45-25-P4-00200.2502	DIAZ JUAN +REI FATIMA H/W11964 TULIO WAY #2	11964 TULIO WAY 2502FORT MYERS, FL 33912	MFA1	$524.34	$1,742.36	$2,266.70
09-45-25-P4-00200.2503	BREMS JOETTE H & JOHNSON DEBRA S11964 TU	11964 TULIO WAY 2503FORT MYERS, FL 33912	MFA1	$524.34	$1,742.36	$2,266.70
09-45-25-P4-00200.2504	PIROFSKY HOWARD + MAUREEN L25 WINDING I	11964 TULIO WAY 2504FORT MYERS, FL 33912	MFA1	$0.00	$1,742.36	$1,742.36
09-45-25-P4-00200.2601	ZEILBERGER JEFFREY +EHRLICH SARA J/T219 TI	11948 TULIO WAY 2601FORT MYERS, FL 33912	MFA1	$524.34	$1,742.36	$2,266.70
09-45-25-P4-00200.2602	MASSARO VINCENT C20 BARBARA RDRANDOLI	11948 TULIO WAY 2602FORT MYERS, FL 33912	MFA1	$524.34	$1,742.36	$2,266.70
09-45-25-P4-00200.2603	LYNCH EVELYN C + HILLMAN KATHLEEN S11948	11948 TULIO WAY 2603FORT MYERS, FL 33912	MFA1	$524.34	$1,742.36	$2,266.70
09-45-25-P4-00200.2604	BERROYA MAYE TR +CUEVAS FRANCIS TRFOR F	11948 TULIO WAY 2604FORT MYERS, FL 33912	MFA1	$524.34	$1,742.36	$2,266.70
09-45-25-P4-00200.2605	LYNCH STEVEN R & CAMMIE E11948 TULIO WAY	11948 TULIO WAY 2605FORT MYERS, FL 33912	MFA1	$524.34	$1,742.36	$2,266.70
09-45-25-P4-00200.2606	KNACKSTEDT DONALD P + JOY E1105 LORRAINI	11948 TULIO WAY 2606FORT MYERS, FL 33912	MFA1	$524.34	$1,742.36	$2,266.70
09-45-25-P4-00200.2701	KALPEDIS DENNIS C + SUSAN C7890 KINGSBURY	11947 ADONCIA WAY 2701FORT MYERS, FL 33912	MFA1	$524.34	$1,742.36	$2,266.70
09-45-25-P4-00200.2702	VALENTINO FRANKMIDLAND TRUST COMPANY	11947 ADONCIA WAY 2702FORT MYERS, FL 33912	MFA1	$524.34	$1,742.36	$2,266.70
09-45-25-P4-00200.2703	BELISLE TODD R + CYNTHIA A11947 ADONCIA W	11947 ADONCIA WAY 2703FORT MYERS, FL 33912	MFA1	$524.34	$1,742.36	$2,266.70
09-45-25-P4-00200.2704	BONDY MARC + MARY 1/2 +MARCOTTE VINCE +	11947 ADONCIA WAY 2704FORT MYERS, FL 33912	MFA1	$524.34	$1,742.36	$2,266.70
09-45-25-P4-00200.2705	DENNEBAUM MELISSA L603 SAISBURY RDSOUT	11947 ADONCIA WAY 2705FORT MYERS, FL 33912	MFA1	$524.34	$1,742.36	$2,266.70
09-45-25-P4-00200.2706	FITZPATRICK BRIAN F604 MAGNOLIA STBAYVIL	11947 ADONCIA WAY 2706FORT MYERS, FL 33912	MFA1	$524.34	$1,742.36	$2,266.70
09-45-25-P4-00200.2707	COLBY JEREMY A & KIMBERLY9 BROADMOOR C	11947 ADONCIA WAY 2707FORT MYERS, FL 33912	MFA1	$524.34	$1,742.36	$2,266.70
09-45-25-P4-00200.2708	SALAMONE ANTHONY J + SALAMONE JEANNA I	11947 ADONCIA WAY 2708FORT MYERS, FL 33912	MFA1	$524.34	$1,742.36	$2,266.70
09-45-25-P4-00200.2801	COONER JEFFREY C + SHERRI D11923 ADONCIA	11923 ADONCIA WAY 2801FORT MYERS, FL 33912	MFA1	$524.34	$1,742.36	$2,266.70
09-45-25-P4-00200.2802	LESKO JAMES E + KIMBERLY A7312 STOCKWOO	11923 ADONCIA WAY 2802FORT MYERS, FL 33912	MFA1	$524.34	$1,742.36	$2,266.70
09-45-25-P4-00200.2803	MICHAEL LEVI BURT265 ED ESSICK RDLEXINGT	11923 ADONCIA WAY 2803FORT MYERS, FL 33912	MFA1	$524.34	$1,742.36	$2,266.70
09-45-25-P4-00200.2804	GREENWELL KATHLEEN11923 ADONCIA WAY #28	11923 ADONCIA WAY 2804FORT MYERS, FL 33912	MFA1	$524.34	$1,742.36	$2,266.70
09-45-25-P4-00200.2805	CHADWICK MARK +REED KATHERYN ANNA T/C	11923 ADONCIA WAY 2805FORT MYERS, FL 33912	MFA1	$524.34	$1,742.36	$2,266.70
09-45-25-P4-00200.2806	ECHO HEALTH INC868 CORPORATE WAYWESTLA	11923 ADONCIA WAY 2806FORT MYERS, FL 33912	MFA1	$524.34	$1,742.36	$2,266.70
09-45-25-P4-00200.2901	STEWART JEFFERY GLEN & STEWART HEATHER	11924 TULIO WAY 2901FORT MYERS, FL 33912	MFA1	$524.34	$1,742.36	$2,266.70
09-45-25-P4-00200.2902	ME LLC4252 SANCTUARY WAYBONITA SPRINGS	11924 TULIO WAY 2902FORT MYERS, FL 33912	MFA1	$524.34	$1,742.36	$2,266.70
09-45-25-P4-00200.2903	FERGUSON QUINN KATHLEEN MARYQUINN MIC	11924 TULIO WAY 2903FORT MYERS, FL 33912	MFA1	$524.34	$1,742.36	$2,266.70
09-45-25-P4-00200.2904	BORDNER TIMOTHY A11924 TULIO WAY #2904FO	11924 TULIO WAY 2904FORT MYERS, FL 33912	MFA1	$524.34	$1,742.36	$2,266.70
09-45-25-P4-00200.2905	LANGERMANN LYNNE L11924 TULIO WAY #2905	11924 TULIO WAY 2905FORT MYERS, FL 33912	MFA1	$524.34	$1,742.36	$2,266.70
09-45-25-P4-00200.2906	BAILEY CHRISTINE E + LAFRENIER CHRISTOPHI	11924 TULIO WAY 2906FORT MYERS, FL 33912	MFA1	$524.34	$1,742.36	$2,266.70
09-45-25-P4-00200.3001	COLOMBO VINCENZO & COLOMBO DONNA MA	11907 ADONCIA WAY 3001FORT MYERS, FL 33912	MFA1	$524.34	$1,742.36	$2,266.70
09-45-25-P4-00200.3002	BOOHER AMANDA L11907 ADONCIA WAY #3002F	11907 ADONCIA WAY 3002FORT MYERS, FL 33912	MFA1	$524.34	$1,742.36	$2,266.70
09-45-25-P4-00200.3003	HYNES JAMES J + JODEAN M11907 ADONCIA WA	11907 ADONCIA WAY 3003FORT MYERS, FL 33912	MFA1	$524.34	$1,742.36	$2,266.70
09-45-25-P4-00200.3004	PELLEGRINO RICHARD T + DIANE K3430 STRATI	11907 ADONCIA WAY 3004FORT MYERS, FL 33912	MFA1	$524.34	$1,742.36	$2,266.70
09-45-25-P4-00200.3005	PELZER RICHARD W + LYNN M54 BRYMAN RD R	11907 ADONCIA WAY 3005FORT MYERS, FL 33912	MFA1	$524.34	$1,742.36	$2,266.70
09-45-25-P4-00200.3006	CACCHIO MICHAEL A & CACCHIO MICHELLE L5	11907 ADONCIA WAY 3006FORT MYERS, FL 33912	MFA1	$524.34	$1,742.36	$2,266.70
09-45-25-P4-00200.3101	ROSS GILLES & POISSON DOMINIQUE911-4901 R	11908 TULIO WAY 3101FORT MYERS, FL 33912	MFA1	$524.34	$1,742.36	$2,266.70
09-45-25-P4-00200.3102	GRAY JARED15850 GREY FRIAS CTFORT MYERS	11908 TULIO WAY 3102FORT MYERS, FL 33912	MFA1	$524.34	$1,742.36	$2,266.70
09-45-25-P4-00200.3103	BAHL ROBERT + BAHL KERRY1632 51ST ST S AP	11908 TULIO WAY 3103FORT MYERS, FL 33912	MFA1	$524.34	$1,742.36	$2,266.70
09-45-25-P4-00200.3104	CONFREDA LORI SPREMULLI461 PAVILION AVEV	11908 TULIO WAY 3104FORT MYERS, FL 33912	MFA1	$524.34	$1,742.36	$2,266.70
09-45-25-P4-00200.3105	MULLER MANAGEMENT LC16150 PERFORMANC	11908 TULIO WAY 3105FORT MYERS, FL 33912	MFA1	$524.34	$1,742.36	$2,266.70
09-45-25-P4-00200.3106	FLORIDA REAL ESTATE LLC1036 W 3RD STDUBU	11908 TULIO WAY 3106FORT MYERS, FL 33912	MFA1	$524.34	$1,742.36	$2,266.70
09-45-25-P4-00200.3201	AOUCHICHE RACHID + KIM11855 ADONCIA WAY	11855 ADONCIA WAY 3201FORT MYERS, FL 33912	MFA2	$524.34	$1,742.36	$2,266.70

PASEO COMMUNITY DEVELOPMENT DISTRICT
2019 ASSESSMENT LIEN ROLL (UNIFORM METHOD)

STRAP	Owner	Site Address	LU	SERIES 2018 DEBT SERVICE	O&M	TOTAL
09-45-25-P4-00200.3202	MAURO JOSEPHINE & ROBERT M11855 ADONCIA	11855 ADONCIA WAY 3202FORT MYERS, FL 33912	MFA2	$524.34	$1,742.36	$2,266.70
09-45-25-P4-00200.3203	NOY IAN TRFOR IAN NOY TRUST 8116 BIBIANNA	11855 ADONCIA WAY 3203FORT MYERS, FL 33912	MFA2	$524.34	$1,742.36	$2,266.70
09-45-25-P4-00200.3204	BURR STEVEN F & GAIL A3955 MIDDLE RDCANA	11855 ADONCIA WAY 3204FORT MYERS, FL 33912	MFA2	$524.34	$1,742.36	$2,266.70
09-45-25-P4-00200.3205	LEROUX DAVID J + CONNIE L2388 COPPER CREE	11855 ADONCIA WAY 3205FORT MYERS, FL 33912	MFA2	$524.34	$1,742.36	$2,266.70
09-45-25-P4-00200.3206	RHODES MICHAEL C11855 ADONCIA WAY #3206F	11855 ADONCIA WAY 3206FORT MYERS, FL 33912	MFA2	$524.34	$1,742.36	$2,266.70
09-45-25-P4-00200.3301	BELAIR DOUGLAS E + SUSAN J10157 SYCAMORE	11852 TULIO WAY 3301FORT MYERS, FL 33912	MFA2	$524.34	$1,742.36	$2,266.70
09-45-25-P4-00200.3302	MARI JOSEPH & JANET42 LINDRON AVESMITHTO	11852 TULIO WAY 3302FORT MYERS, FL 33912	MFA2	$524.34	$1,742.36	$2,266.70
09-45-25-P4-00200.3303	SOPHIA NANCY M103 DUNMORE LNWILLISTON	11852 TULIO WAY 3303FORT MYERS, FL 33912	MFA2	$524.34	$1,742.36	$2,266.70
09-45-25-P4-00200.3304	MUNDSCHENK DONALD J + JOYCE A2 CHEROKE	11852 TULIO WAY 3304FORT MYERS, FL 33912	MFA2	$524.34	$1,742.36	$2,266.70
09-45-25-P4-00200.3305	FARINACCI THEODORE J +FARINACCI MICHELLE	11852 TULIO WAY 3305FORT MYERS, FL 33912	MFA2	$524.34	$1,742.36	$2,266.70
09-45-25-P4-00200.3306	RESCH JEFFRY G +RESCH DIANE C J/T11852 TUL	11852 TULIO WAY 3306FORT MYERS, FL 33912	MFA2	$524.34	$1,742.36	$2,266.70
09-45-25-P4-00200.3401	MILLER CHRISTOPHER ANDREWUNIT 2220 BOX	11837 ADONCIA WAY 3401FORT MYERS, FL 33912	MFA2	$524.34	$1,742.36	$2,266.70
09-45-25-P4-00200.3402	SCHIEFERSTEIN LAURA K11837 ADONCIA WAY #	11837 ADONCIA WAY 3402FORT MYERS, FL 33912	MFA2	$524.34	$1,742.36	$2,266.70
09-45-25-P4-00200.3403	GIORGIO RONALD +BOTH NATASHA H/W167 BIR	11837 ADONCIA WAY 3403FORT MYERS, FL 33912	MFA2	$524.34	$1,742.36	$2,266.70
09-45-25-P4-00200.3404	GIONFRIDDO BARRY TR FOR BARRY GIONFRIDI	11837 ADONCIA WAY 3404FORT MYERS, FL 33912	MFA2	$524.34	$1,742.36	$2,266.70
09-45-25-P4-00200.3405	HOOVER SHARON KOZIKOWSKI + SCHEHR JOSE	11837 ADONCIA WAY 3405FORT MYERS, FL 33912	MFA2	$524.34	$1,742.36	$2,266.70
09-45-25-P4-00200.3406	JACL LLC8550 ROUTE 16SHIPMAN IL, 62685	11837 ADONCIA WAY 3406FORT MYERS, FL 33912	MFA2	$524.34	$1,742.36	$2,266.70
09-45-25-P4-00200.3501	LEVINE ALISON B11834 TULIO WAY # 3501FORT M	11834 TULIO WAY 3501FORT MYERS, FL 33912	MFA2	$524.34	$1,742.36	$2,266.70
09-45-25-P4-00200.3502	GRAVEL MICHAEL J + CAROLYN M11834 TULIO W	11834 TULIO WAY 3502FORT MYERS, FL 33912	MFA2	$524.34	$1,742.36	$2,266.70
09-45-25-P4-00200.3503	CRAPELLA FRANK & LILLIAN601 NICHOLS ST AE	11834 TULIO WAY 3503FORT MYERS, FL 33912	MFA2	$524.34	$1,742.36	$2,266.70
09-45-25-P4-00200.3504	HOFFLANDER DAVID + CARY28588 N SKY CREST	11834 TULIO WAY 3504FORT MYERS, FL 33912	MFA2	$524.34	$1,742.36	$2,266.70
09-45-25-P4-00200.3505	LOPRESTI FRANK & MEGHAN11834 TULIO WAY #	11834 TULIO WAY 3505FORT MYERS, FL 33912	MFA2	$524.34	$1,742.36	$2,266.70
09-45-25-P4-00200.3506	TURNER AUSTIN S + ARIELLE C11834 TULIO WAY	11834 TULIO WAY 3506FORT MYERS, FL 33912	MFA2	$524.34	$1,742.36	$2,266.70
09-45-25-P4-00200.3601	BEYER DEAN ALEX +BEYER KIMBERLY ANN H/W	8421 OLINDA WAY 3601FORT MYERS, FL 33912	MFA2	$524.34	$1,742.36	$2,266.70
09-45-25-P4-00200.3602	HENLEY WILLIAM D JR8421 OLINDA WAY # 3602F	8421 OLINDA WAY 3602FORT MYERS, FL 33912	MFA2	$524.34	$1,742.36	$2,266.70
09-45-25-P4-00200.3603	MILKS MATTHEW J + JODI K5124 MAPLERIDGE D	8421 OLINDA WAY 3603FORT MYERS, FL 33912	MFA2	$524.34	$1,742.36	$2,266.70
09-45-25-P4-00200.3604	DOYLE MICHAEL J + SANDRA J74-875 UNIVERSIT	8421 OLINDA WAY 3604FORT MYERS, FL 33912	MFA2	$524.34	$1,742.36	$2,266.70
09-45-25-P4-00200.3605	ROBISON JONATHAN ISAAC +DAVIS-ROBISON JE	8421 OLINDA WAY 3605FORT MYERS, FL 33912	MFA2	$524.34	$1,742.36	$2,266.70
09-45-25-P4-00200.3606	FITTS JOHN + MICHELLE3195 TOULOUSEBOURB	8421 OLINDA WAY 3606FORT MYERS, FL 33912	MFA2	$524.34	$1,742.36	$2,266.70
09-45-25-P4-00200.3607	HICKS KELLY & CRYSTAL SPO BOX 436SUBLETT	8421 OLINDA WAY 3607FORT MYERS, FL 33912	MFA2	$524.34	$1,742.36	$2,266.70
09-45-25-P4-00200.3608	DELIA DOMINICK F8421 OLINDA WAY #3608FORT	8421 OLINDA WAY 3608FORT MYERS, FL 33912	MFA2	$524.34	$1,742.36	$2,266.70
09-45-25-P4-00200.3609	BUHLMAN MICHAEL KENNETH +BUHLMAN LOU	8421 OLINDA WAY 3609FORT MYERS, FL 33912	MFA2	$524.34	$1,742.36	$2,266.70
09-45-25-P4-00200.3610	MESAROS JOHN J + MAYRA R8421 OLINDA WAY #	8421 OLINDA WAY 3610FORT MYERS, FL 33912	MFA2	$524.34	$1,742.36	$2,266.70
09-45-25-P4-00200.3701	TRAFTON WILLIAM J + KAREN LPO BOX 626MOR	8471 OLINDA WAY 3701FORT MYERS, FL 33912	MFA2	$524.34	$1,742.36	$2,266.70
09-45-25-P4-00200.3702	FANNIN WILLIAM JR8471 OLINDA WAY #3702FOR	8471 OLINDA WAY 3702FORT MYERS, FL 33912	MFA2	$524.34	$1,742.36	$2,266.70
09-45-25-P4-00200.3703	JOHNSON CURTIS & LESLIE A TRFOR CURTIS & L	8471 OLINDA WAY 3703FORT MYERS, FL 33912	MFA2	$524.34	$1,742.36	$2,266.70
09-45-25-P4-00200.3704	KUMAR ANJNA DHAMIJA + RAJAN 18 BUFORD R	8471 OLINDA WAY 3704FORT MYERS, FL 33912	MFA2	$524.34	$1,742.36	$2,266.70
09-45-25-P4-00200.3705	BATTLES DENNIS O + BATTLES TODD A J/T8471 O	8471 OLINDA WAY 3705FORT MYERS, FL 33912	MFA2	$524.34	$1,742.36	$2,266.70
09-45-25-P4-00200.3706	GRILLO BRENDAN M + CHELSEA M5394 W LAKE	8471 OLINDA WAY 3706FORT MYERS, FL 33912	MFA2	$524.34	$1,742.36	$2,266.70
09-45-25-P4-00200.3707	KVETON RON + ANGELA16604 CEDAR AVE SROS	8471 OLINDA WAY 3707FORT MYERS, FL 33912	MFA2	$524.34	$1,742.36	$2,266.70
09-45-25-P4-00200.3708	BESELER RICHARD A + JEANNE 79 ALEXANDER	8471 OLINDA WAY 3708FORT MYERS, FL 33912	MFA2	$524.34	$1,742.36	$2,266.70
09-45-25-P4-00200.3709	DAFOCOM HOLDINGS INC33 ROYDON PL UNIT 1	8471 OLINDA WAY 3709FORT MYERS, FL 33912	MFA2	$524.34	$1,742.36	$2,266.70
09-45-25-P4-00200.3710	PENA ADOLFO J + VIRGINIA S8471 OLINDA WAY #	8471 OLINDA WAY 3710FORT MYERS, FL 33912	MFA2	$524.34	$1,742.36	$2,266.70
09-45-25-P4-00200.3801	BIGLIN JAMES C & BIGLIN JACQUELINE A11123 O	11737 ADONCIA WAY 3801FORT MYERS, FL 33912	MFA2	$524.34	$1,742.36	$2,266.70
09-45-25-P4-00200.3802	ARICO DANA MARIE306A EMMANS RDFLANDER	11737 ADONCIA WAY 3802FORT MYERS, FL 33912	MFA2	$524.34	$1,742.36	$2,266.70
09-45-25-P4-00200.3803	TORO ELMER F11737 ADONCIA WAY # 3803FORT	11737 ADONCIA WAY 3803FORT MYERS, FL 33912	MFA2	$524.34	$1,742.36	$2,266.70
09-45-25-P4-00200.3804	PAIGE STEPHEN F JR & PAIGE SANDRA L4955 LA	11737 ADONCIA WAY 3804FORT MYERS, FL 33912	MFA2	$524.34	$1,742.36	$2,266.70
09-45-25-P4-00200.3805	ARTALE SEBASTIAN F + BARBARA A11737 ADON	11737 ADONCIA WAY 3805FORT MYERS, FL 33912	MFA2	$524.34	$1,742.36	$2,266.70
09-45-25-P4-00200.3806	MCCORMICK STEVE + JANET12 GREAVES AVEC	11737 ADONCIA WAY 3806FORT MYERS, FL 33912	MFA2	$524.34	$1,742.36	$2,266.70
09-45-25-P4-00200.3807	BROWN PAULA B11737 ADONCIA WAY # 3807FOR	11737 ADONCIA WAY 3807FORT MYERS, FL 33912	MFA2	$524.34	$1,742.36	$2,266.70
09-45-25-P4-00200.3808	RONALD J RICKMAN TRUST +DONNA J RICKMA	11737 ADONCIA WAY 3808FORT MYERS, FL 33912	MFA2	$524.34	$1,742.36	$2,266.70
09-45-25-P4-00200.3809	BORKOWSKI NORMA R11737 ADONCIA WAY#380	11737 ADONCIA WAY 3809FORT MYERS, FL 33912	MFA2	$524.34	$1,742.36	$2,266.70
09-45-25-P4-00200.3810	VUKEL BECO + MERSIHA11737 ADONCIA WAY #3	11737 ADONCIA WAY 3810FORT MYERS, FL 33912	MFA2	$524.34	$1,742.36	$2,266.70
09-45-25-P4-00200.3901	MELCHIORE FRANK M & MELCHIORE DEBORAH	11761 ADONCIA WAY 3901FORT MYERS, FL 33912	MFA2	$524.34	$1,742.36	$2,266.70

PASEO COMMUNITY DEVELOPMENT DISTRICT
2019 ASSESSMENT LIEN ROLL (UNIFORM METHOD)

STRAP	Owner	Site Address	LU	SERIES 2018 DEBT SERVICE	O&M	TOTAL
09-45-25-P4-00200.3902	ZARKOVICH LOU ANN TRFOR ZARKOVICH FAM	11761 ADONCIA WAY 3902FORT MYERS, FL 33912	MFA2	$524.34	$1,742.36	$2,266.70
09-45-25-P4-00200.3903	WILLIS RUTH C & ROBERT D6406 LONG POINT R	11761 ADONCIA WAY 3903FORT MYERS, FL 33912	MFA2	$524.34	$1,742.36	$2,266.70
09-45-25-P4-00200.3904	RYANS THOMAS RICHARD & RYANS DIANE LESI	11761 ADONCIA WAY 3904FORT MYERS, FL 33912	MFA2	$524.34	$1,742.36	$2,266.70
09-45-25-P4-00200.3905	WESCH CAROL L TRFOR CAROL L WESCH TRUST	11761 ADONCIA WAY 3905FORT MYERS, FL 33912	MFA2	$524.34	$1,742.36	$2,266.70
09-45-25-P4-00200.3906	BRENNSTEINER ERNEST R JR +BRENNSTEINER	11761 ADONCIA WAY 3906FORT MYERS, FL 33912	MFA2	$524.34	$1,742.36	$2,266.70
09-45-25-P4-00200.3907	NIELSEN E MAGDALENE +NIELSEN CHRISTIAN I	11761 ADONCIA WAY 3907FORT MYERS, FL 33912	MFA2	$524.34	$1,742.36	$2,266.70
09-45-25-P4-00200.3908	SINHA NIRAJ KUMAR + MAMTA5111 MISSISSAUG	11761 ADONCIA WAY 3908FORT MYERS, FL 33912	MFA2	$524.34	$1,742.36	$2,266.70
09-45-25-P4-00200.3909	COOK STEPHEN M + CHERYL L6172 APACHE WAY	11761 ADONCIA WAY 3909FORT MYERS, FL 33912	MFA2	$524.34	$1,742.36	$2,266.70
09-45-25-P4-00200.3910	GREEN RICHARD K + CHERYL A14280 W SHERYI	11761 ADONCIA WAY 3910FORT MYERS, FL 33912	MFA2	$524.34	$1,742.36	$2,266.70
10-45-25-P4-0010C.1100	PASEO CDDRIZZETTA & COMPANY INC12750 CIT	SUBMERGEDFORT MYERS, FL	0	$0.00	$0.00	$0.00
10-45-25-P4-0010D.0030	PASEO CDDRIZZETTA & COMPANY INC12750 CIT	PASEO C/EFORT MYERS, FL	0	$0.00	$0.00	$0.00
				$805,906.62	**$1,966,929.86**	**$2,772,836.48**
		Less Collection Costs and Discounts @	**4%**	**($32,236.26)**	**($78,610.73)**	**($110,913.46)**
		Tax Collector Fee ($1.45 per parcel / line)			**($1,661.70)**	**($1,661.70)**
		Net Expected Assessment Revenue		**$773,670.36**	**$1,886,657.43**	**$2,661,923.02**
				29.06%	**70.88%**	**100.00%**

(1) Upon each sale by the Developer to an unrelated third-party, the District shall assign a permanent Series 2018 assessment and annual installment.

TOTAL RECORDS	**1199**
RECORDS ASSESSED	**1146**
RECORDS NOT ASSESSED	**53**
TOTAL ASSESSMENT	**$2,772,836.48**

Tab 11

RESOLUTION 2019-07

A RESOLUTION OF THE BOARD OF SUPERVISORS OF PASEO COMMUNITY DEVELOPMENT DISTRICT DESIGNATING DATES, TIME AND LOCATION FOR REGULAR MEETINGS OF THE BOARD OF SUPERVISORS OF THE DISTRICT, AND PROVIDING FOR AN EFFECTIVE DATE

WHEREAS, Paseo Community Development District (hereinafter the "District") is a local unit of special-purpose government created and existing pursuant to Chapter 190, Florida Statutes, being situated entirely within the City of Fort Myers, Lee County, Florida; and

WHEREAS, the District's Board of Supervisors (hereinafter the "Board") is statutorily authorized to exercise the powers granted to the District; and

WHEREAS, all meetings of the Board shall be open to the public and governed by the provisions of Chapter 286, Florida Statutes; and

WHEREAS, the Board is statutorily required to file annually, with the local governing authority and the Florida Department of Economic Opportunity, a schedule of its regular meetings.

NOW, THEREFORE, BE IT RESOLVED BY THE BOARD OF SUPERVISORS OF PASEO COMMUNITY DEVELOPMENT DISTRICT:

Section 1. Regular meetings of the Board of Supervisors of the District shall be held as provided on the schedule attached as Exhibit "A".

Section 2. In accordance with Section 189.015(1), Florida Statutes, the District's Secretary is hereby directed to file annually, with the City of Fort Myers, Lee County, a schedule of the District's regular meetings.

Section 3. This Resolution shall become effective immediately upon its adoption.

PASSED AND ADOPTED THIS 28th DAY OF AUGUST, 2019.

ATTEST:	**PASEO COMMUNITY DEVELOPMENT DISTRICT**
_____	_____
SECRETARY/ASSISTANT SECRETARY	**CHAIRMAN / VICE CHAIRMAN**

EXHIBIT "A"
BOARD OF SUPERVISORS MEETING DATES
PASEO COMMUNITY DEVELOPMENT DISTRICT
FISCAL YEAR 2019/2020

October 23, 2019 @ 11:00 a.m.
January 22, 2020 @ 11:00 a.m.
February 26, 2020 @ 5:30 p.m.
March 25, 2020 @ 11:00 a.m.
April 22, 2020 @ 5:30 p.m.
May 27, 2020 @ 11:00 a.m.
June 24, 2020 @ 5:30 p.m.
July 22, 2020 @ 11:00 a.m.
August 26, 2020 @ 5:30 p.m.
September 23, 2020 @ 11:00 a.m.

All meetings will be held at the Paseo Village Centre - Theatre, located at 11611 Paseo Grande Boulevard, Fort Myers, Florida 33912.

Tab 12

MINUTES OF MEETING

Each person who decides to appeal any decision made by the Board with respect to any matter considered at the meeting is advised that the person may need to ensure that a verbatim record of the proceedings is made, including the testimony and evidence upon which such appeal is to be based.

PASEO
COMMUNITY DEVELOPMENT DISTRICT

The special meeting of the Board of Supervisors of the Paseo Community Development District was held on **Wednesday, July 17, 2019 at 11:00 a.m.** at the Paseo Village Center, located at 1611 Paseo Grande Boulevard, Fort Myers, Florida 33912.

Present and constituting a quorum:

Manny Samson	**Board Supervisor, Chairman**
Steven Brown	**Board Supervisor, Vice Chairman**
Lyle Hicks	**Board Supervisor, Assistant Secretary**
Jim Heether	**Board Supervisor, Assistant Secretary**
Sharon Schulman	**Board Supervisor, Assistant Secretary**

Also present were:

Belinda Blandon	**District Manager, Rizzetta & Company, Inc.**
Michael Lake	**Field Manager, Rizzetta & Company, Inc.**
Tyree Brown	**Rizzetta & Company, Inc. (via speaker phone)**
Andrew d'Adesky	**District Counsel, Latham, Shuker, Eden & Beaudine, LLP (via speaker phone)**
Doug Tarn	**District Engineer, Barraco & Associates, Inc.**
Joe Fenner	**Pinnacle Landscape**
Audience	

FIRST ORDER OF BUSINESS **Call to Order**

Ms. Blandon called the meeting to order and called the roll.

SECOND ORDER OF BUSINESS **Public Comment**

Ms. Blandon opened the floor for public comment on Agenda items. Questions and comments from the audience were entertained.

THIRD ORDER OF BUSINESS **District Engineer Staff Report**

Mr. Tarn reviewed the additional brick paver proposals that were received from Creative Imprints and Tincher Concrete Construction that were received after the agenda was issued. He advised that the proposal from Creative Imprints was slightly lower than Timo Brothers and the Tincher Concrete Construction proposal was double that of Timo

DRAFT

Brothers. Mr. Tarn advised that the proposals include all needed repairs that fall under the purview of the CDD. Ms. Blandon advised that since the Creative Imprints and Tincher Concrete Construction proposals were not included in the agenda the Board would need to open the item to public comment in order to make a selection.

The item was open to public comment. There were no comments from the public.

Discussion ensued regarding the proposals received for paver repairs.

On a Motion by Mr. Brown, seconded by Ms. Schulman, with all in favor, the Board Approved the Proposal from Creative Imprints, in the Amount of $12,700.00, for Brick Paver Repairs, Subject to Review and Preparation of a Contract by District Counsel, for the Paseo Community Development District.

Ms. Blandon advised that this item will be paid from reserves.

Mr. Tarn discussed the curb repair bid and advised that they have updated their bid to include the sidewalk at the bridge as well as including rust inhibitor.

Mr. Tarn reviewed the drainage inspection exhibit. Discussion ensued. Mr. Tarn recommended cleaning the extreme instances; those that have 24” or 30” of sediment; he advised that the number of extreme instances is approximately 10.

Mr. Hicks recommended that the District Engineer obtain proposals for cleanout of drainage structures holding debris at 18” or greater.

Mr. Brown asked that Mr. Tarn take a look at the structure that is cracked to determine the best course of action, if any is required at this time.

Mr. Tarn advised that bids were requested from four contractors for debris removal of the drainage structures; he advised that we will contact them to only bid those structures with debris greater than 18” at this time and that the Board will re-solicit bids for the remainder of the structures after rainy season.

Ms. Blandon advised that since Mr. Tyree Brown is on the phone and Mr. Fenner of Pinnacle is present, she would like to review and landscape concerns at this time.

Mr. Brown inquired regarding the amount of extra time being added due to utilizing hand or push mowers. Mr. Fenner advised that this time of year it is significant. Mr. Brown advised that since hand/push mowers are not included in the contract, he does not want to receive an invoice for the added labor. Mr. Hicks advised that he would like Mr. Fenner to review an area where a transformer was replaced on condo property that caused damage to the CDD sodded area. Mr. Fenner advised that he will review the areas of concern and address them at the time that the sod arrives. Mr. Samson advised that the additional areas of concern would need to be billed separately in order to back charge the responsible parties. Mr. Fenner advised of trees that were struck by lightening that will need to be replaced.

DRAFT

Mr. Tyree Brown discussed the tree structural pruning project that was discussed a year ago; he had been monitoring the trees to ensure they recovered from the storm and he advised the trees have recovered well and he recommends moving forward with the structural pruning project. Mr. Heether asked if proposals can be obtained for the structural pruning. Mr. Tyree Brown advised that he will obtain proposals from three vendors to present to the Board. Mr. Tyree Brown advised that Pinnacle Landscapes continues to improve and he appreciates their efforts.

FOURTH ORDER OF BUSINESS **Review and Acceptance of Audit for Fiscal Year End September 30, 2018**

Ms. Blandon provided a detailed overview of the audit for fiscal year end September 30, 2018 and advised that the audit was clean and there were no adverse findings in the audit. She asked if there were any questions; there were none.

> On a Motion by Mr. Samson, seconded by Mr. Brown, with all in favor, the Board Accepted the Audit for Fiscal Year End September 30, 2018, as Prepared by McDirmit Davis & Company, for the Paseo Community Development District.

FIFTH ORDER OF BUSINESS **Consideration of Proposals for Gazebo Railing Repairs**

Ms. Blandon reviewed the proposals received from Blast Off for sandblasting and painting in the amount of $42,500.00, and from McCleods for pressure washing and painting in the amount of $15,840.00. She advised that Collier Fencing provided a price of $36,828.00 for replacement, including permit fees. Discussion ensued. The Board recommended obtaining additional proposals for replacement of the gazebo railings.

SIXTH ORDER OF BUSINESS **Consideration of Naples Electric Motor Works Proposals for Irrigation System Controllers and Semi-Annual Pump Station Maintenance - Esperanza**

Ms. Blandon reviewed the proposal received from Naples Electric Motor Works. Discussion ensued.

> On a Motion by Mr. Hicks, seconded by Ms. Schulman, with all in favor, the Board Approved the Naples Electric Motor Works Proposal to Replace Six Irrigation Pump Controls, in the Amount of $18,810.00, Subject to Preparation of an Agreement by Counsel, for the Paseo Community Development District.

SEVENTH ORDER OF BUSINESS **Consideration of Proposals for ADA Website Compliance**

Ms. Blandon distributed a summary comparison of the proposals received from

DRAFT

ADA Site Compliance, Campus Suite, and V Global Tech. She advised that Egis has recommended the three companies that have provided proposals and Egis has set an October 1st deadline to have something in place in order to be covered in the event of a claim. Discussion ensued.

> On a Motion by Mr. Hicks, seconded by Mr. Brown, with all in favor, the Board Approved the Proposal Received from ADA Site Compliance, Subject to Review and Preparation of an Agreement by Counsel, and Further Only Posting Documentation as Required by Florida Statute, for the Paseo Community Development District.

EIGHTH ORDER OF BUSINESS **Consideration of the Minutes of the Board of Supervisors' Meeting held on June 26, 2019**

Ms. Blandon provided an overview of the minutes of the Board of Supervisors' meeting held on June 26, 2019 and asked if there were any questions related to the minutes. There were none.

> On a Motion by Mr. Samson, seconded by Mr. Heether, with all in favor, the Board Approved the Minutes of the Board of Supervisors' Meeting held on May 22, 2019, for the Paseo Community Development District.

NINTH ORDER OF BUSINESS **Staff Reports**

A. District Counsel

Mr. d'Adesky advised that he has been working on routine items. Mr. Heether inquired regarding payment of the vendor for the LED lighting installation. Mr. d'Adesky advised that further information is needed in order to move forward with those discussions related to the technical specifications. Mr. d'Adesky advised that is the issue that needs to be reviewed as the report was preliminary and further investigation needs to be done. Board discussion ensued regarding the LED lighting project. Mr. d'Adesky advised that the Hotwire Easement has been finalized and has been sent for recording.

B. District Manager

Ms. Blandon advised that the next meeting is scheduled for August 28, 2019 at 5:30 p.m. during which the public hearing on the final budget will be held.

Mr. Heether inquired as to information being sent to Mr. d'Adesky that is distributed at the meetings. Mr. d'Adesky advised that Mr. Heether can provide information to Ms. Blandon who will scan and email the information to him.

DRAFT

Ms. Blandon advised that she is working on proposals for the door at the guardhouse.

Mr. Samson inquired as to responsibility of distribution of transponders. Ms. Blandon advised that the process has not changed although the new process will be implemented in the first week of August.

TENTH ORDER OF BUSINESS **Supervisor Requests and Audience Questions**

Ms. Blandon opened the floor to Supervisor requests and comments.

Mr. Brown advised that he discussed with Mr. Lake the landscape lighting; and proposal requirements are being put together to be sent to each of the vendors so that all vendors will quote the same information. Mr. Brown advised that he will provide the information to Ms. Blandon to be distributed to all vendors. He further advised that he would like proposals to be available for the August meeting for consideration. Discussion ensued.

Mr. Samson opened the floor to public comments. There were none.

ELEVENTH ORDER OF BUSINESS **Adjournment**

On a Motion by Mr. Hicks, seconded by Mr. Brown, with all in favor, the Board adjourned the meeting at 12:21 p.m., for the Paseo Community Development District.

_____ _____
Secretary/Assistant Secretary Chairman/Vice Chairman

DRAFT

Tab 13

MINUTES OF MEETING

Each person who decides to appeal any decision made by the Board with respect to any matter considered at the meeting is advised that the person may need to ensure that a verbatim record of the proceedings is made, including the testimony and evidence upon which such appeal is to be based.

PASEO
COMMUNITY DEVELOPMENT DISTRICT

The emergency meeting of the Board of Supervisors of the Paseo Community Development District was held on **Tuesday, August 6, 2019 at 10:00 a.m.** at the Paseo Village Center, located at 1611 Paseo Grande Boulevard, Fort Myers, Florida 33912.

Present and constituting a quorum:

Manny Samson	**Board Supervisor, Chairman (via speaker phone)**
Steven Brown	**Board Supervisor, Vice Chairman**
Lyle Hicks	**Board Supervisor, Assistant Secretary**
Sharon Schulman	**Board Supervisor, Assistant Secretary**

Also present were:

Belinda Blandon	**District Manager, Rizzetta & Company, Inc.**
Michael Lake	**Field Manager, Rizzetta & Company, Inc.**
Andrew d'Adesky	**District Counsel, Latham, Shuker, Eden & Beaudine, LLP (via speaker phone)**
Wes Kayne	**District Engineer, Barraco & Associates, Inc.**
Keith Ferreira	**Hotwire Communications**
Audience	

FIRST ORDER OF BUSINESS **Call to Order**

Ms. Blandon called the meeting to order and called the roll.

SECOND ORDER OF BUSINESS **Discussion Regarding Issues Related to the Hotwire Communications Easement and Work Related to Such Easement**

Mr. Brown provided an overview on the issues related to Hotwire on work being done. Mr. Kayne outlined the deficiencies noted. He advised that a Stop Work Order was issued until such time as this meeting could be held and provided background to the water main issue. Mr. Kayne advised that he reviewed lake number 13. Ms. Schulman stated that she believes Hotwire should pay for the engineer to review the work to be done related to re-sodding. Mr. Hicks commended and spoke regarding laying sod at lake 18. Mr. Kayne spoke regarding what was provided to Hotwire; particularly Hotwires lines being within two feet of waters edge and one foot design control. Mr. Kayne spoke regarding

DRAFT

compaction of sod and some field variations on lake 9. Mr. Kayne directed Hotwire to restore banks to original condition. Mr. Pete Ferreira, director of Construction for Hotwire Communications, spoke regarding the one water main break and two irrigation line breaks. Mr. Ferreira spoke regarding his team checking the depth of the trenches and rectifying any issues as they are found. He advised that regarding restoration; when the pictures were taken, sod placement had not begun although compacting and placement of sod began last Friday. He advised that in reference to the proximity to the lakes; there was some space to deviate, and in some areas they were too close to the lake. He stated that Hotwire is fully responsible for their wires and the CDD will have no expense with any repair that is needed for their infrastructure, per the language in the agreement. He advised he would like to add additional language to be more specific that Hotwire takes full responsibility and cost required in regard to cables being moved. He stated that for future work being done, several lakes have not been touched, he proposed to have a CDD employee or Engineer to walk along with Hotwire as they whiteline the locations for trenching and Hotwire will be responsible for the hours of the CDD employee or engineer. Ms. Blandon inquired as to which lakes, in addition to lake 18, are having an issue. Mr. Ferreira advised there are additional lakes and he will provide that information to Ms. Blandon. He advised the larger lakes in Esperanza and the lakes on the East side of the Condos have not had any work done on them and he would like to walk those with the District Engineer. Ms. Schulman inquired regarding verification of depth. Mr. Ferreira advised that he can provide photos for verification of depth. Mr. Hicks spoke regarding the long term projects for lake bank maintenance after the Hotwire cable is placed and ensuring that the Hotwire cables are not disturbed during the maintenance projects down the road. Mr. Brown inquired as to whether the District Engineer recommends moving of the lines that are placed too close to the waters edge. Mr. Kayne advised it is a concern and the plan provided shows a layout of line location but does not show pull boxes. He asked if there will be pull boxes on the bank. Mr. Ferreira advised the boxes are placed higher than the lakes, a few feet away. Mr. Kayne advised that while this is an HOA project going with Hotwire, they also represent CDD people. When the lakes are remediated, if lines are hit, it is going to be disturbing to the people on those lines and so it is not ideal to have the cable in such close proximity to the banks and it was not shown that way on the plans. Mr. Brown inquired as to whether the CDD should direct Hotwire to move the cables that are too close to the lakes. Mr. Hicks stated it absolutely needs to be moved. Mr. Kayne advised that it would be preferred to have it moved. Mr. Ferreira advised that any future relocations would be the responsibility of Hotwire. Mr. Brown advised that while that is the case, the cables that are currently placed to close to the waters edge needs to be relocated now. Mr. Hicks asked who Hotwire has entered into agreements with. Mr. Ferreira advised they have entered into agreements with the CDD and the Master Association. Mr. Brown advised that any lake that has been worked on needs to be inspected. Ms. Blandon advised that all work that has been conducted on the lakes and berms needs to be inspected. Ms. Schulman advised those inspections should be at the expense of Hotwire. Ms. Blandon confirmed. Mr. Brown reviewed his recommendations: (1) the District Engineer walk with Hotwire, every lake bank where work has been conducted and identify those installations that must be moved (2) the District Engineer walk all the Berms with Hotwire and identify all berms that have been breached or degraded in quality (3) that Hotwire provide a guarantee for a period of time that if anything happens to the berms that Hotwire will pay for the repair of those berms including rip rap behind homes (4) that Hire be required to contract with the District Engineer to whiteline

DRAFT

every future installation of buried cable in Paseo. Ms. Schulman recommended that they also be required to provide documentation identifying the depth of the cable. Mr. Ferreira advised that they will provide pictures. Ms. Blandon discussed the manner of communication and relaying information from homeowners; a lot of the homeowners are approaching the subs and being given different responses. She recommended that Hotwire have a designated representative on site to provide responses to residents to ensure that the information being provided is consistent and correct. Mr. Ferreira advised that those working on site have been directed to refer questions to the proper individuals. Mr. Hicks advised this issue is being addressed; trash is an issue, sometimes it is picked up and sometimes it is not, but for the record it is an issue. Ms. Schulman asked what Mr. Lake and Mr. d'Adesky may have to say. Mr. Kayne advised that most items have been discussed but he wanted to review his concerns: lake proximity, installation corridors, compaction of trenches and sod, perimeter berm impacts, and roadway repairs. He advised that in the letter provided he discussed that Hotwire will be providing record drawings. Mr. Ferreira confirmed. Mr. Kayne asked if it would be GPS located. Mr. Ferreira advised it would not be GPS located; record drawings will be provided based on measurements. Mr. Kayne asked what Hotwire would measure off of. Mr. Ferreira advised that Hotwire would measure off the plat. Mr. Ferreira advised that he will look into GPS locating. Mr. Kayne inquired regarding the plan for the bridge crossing. Mr. Ferreira advised Hotwire will attach the wire to the side of the bridge. Mr. Kayne advised that a detail for that will need to be provided. Mr. Lake spoke regarding recent lake bank work and based on his observations there is no doubt in his mind that the cables at lake 18 will be affected by the future lake bank work. Mr. Lake inquired regarding the installation of sod at the lake where the main fountain feature is behind the condos. Mr. Ferreira advised the sod has been replaced in that area. Mr. Lake spoke regarding the area of sod between the road and sidewalk; Hotwire placed the grass back but some of it has not taken and will need to be replaced. Mr. Kayne asked that Hotwire provide a sketch outlining the areas that have been worked on. Ms. Blandon advised that a work schedule has also been requested so that the CDD knows when Hotwire will be working in which areas. Mr. d'Adesky asked if Counsel from Hotwire has forwarded all correspondence to Hotwire. Mr. Ferreira confirmed. Mr. Brown asked Mr. Ferreira to confirm or agree to the following on the record: (1) Hotwire will provide a full work schedule and current as built drawings for review by the district Engineer (2) Hotwire will conduct a walkthrough with the District Engineer to review all current underground installation for approval or be moved if they do not meet approval (3) Hotwire will conduct a walkthrough with the District Engineer to whiteline any and all future installations (4) Hotwire will provide photos of any and all future installations (5) Hotwire will conduct a walkthrough with the District Engineer to review and inspect all berms to ensure no degradation and provide a written guarantee regarding berm livelihood for a period of time, to be determined by District Counsel (6) Hotwire will provide a record of as built drawings with GPS markings including all pull boxes, junction boxes, and any split offs (7) Hotwire will conduct a final inspection with the District Engineer to ensure compliance with all requirements of the agreement. Mr. Ferreira confirmed. Mr. Brown advised that he will provide the list in writing to the District Manager to have dates applied. He advised that he would like to move forward. Mr. Ferreira asked the CDD to allow Hotwire to address the areas of concern while continuing moving forward. Mr. Brown advised that work can only continue when the areas have been whitelined. Mr. Ferreira confirmed. Discussion ensued regarding when work can continue. Mr. Brown confirmed that no work can be conducted on the CDD property until it has been

DRAFT

approved by the District Engineer. Mr. Hicks asked that Staff keep the Board in the loop as to work that has been approved. Ms. Schulman asked that remediation work take priority. Mr. Ferreira advised that there are different crews conducting new installations versus necessary remediation work. Discussion was held regarding ongoing work as well as Hotwire's knowledge of property responsibilities.

THIRD ORDER OF BUSINESS **Public Comment**

Mr. d'Adesky advised that because this is an emergency meeting the only public comment that can be taken must be related to the Hotwire discussion.

Mr. Duso inquired regarding the need for a Board resolution to allow Hotwire to utilize a CDD vendor for work on CDD property. Mr. d'Adesky advised that it is essentially covered in the easement agreement.

> On a Motion by Mr. Samson, seconded by Mr. Hicks, with all in favor, the Board Delegated Authority to Supervisor Steve Brown to Take Any and All Action Necessary as it Relates to the Hotwire Easement, for the Paseo Community Development District.

FOURTH ORDER OF BUSINESS **Adjournment**

> On a Motion by Mr. Brown, seconded by Mr. Samson, with all in favor, the Board adjourned the meeting at 10:56 a.m., for the Paseo Community Development District.

_____ _____
Secretary/Assistant Secretary Chairman/Vice Chairman

DRAFT

Tab 14

PASEO COMMUNITY DEVELOPMENT DISTRICT

DISTRICT OFFICE · 12750 CITRUS PARK LANE · SUITE 150 · TAMPA, FLORIDA 33625

Operation and Maintenance Expenditures
June 2019
For Board Approval

Attached please find the check register listing the Operation and Maintenance expenditures paid from June 1, 2019 through June 30, 2019. This does not include expenditures previously approved by the Board.

The total items being presented: **$79,463.93**

Approval of Expenditures:

_____

_____ Chairperson

_____ Vice Chairperson

_____ Assistant Secretary

Paseo Community Development District

Paid Operation & Maintenance Expenditures

June 1, 2019 Through June 30, 2019

Vendor Name	Check Number	Invoice Number	Invoice Description	Invoice Amount
Barraco and Associates, Inc.	006248	19692	Engineering Services 05/19	$ 5,717.50
CenturyLink	006245	311416420-06/19	Telephone Service 06/19	$ 541.04
City of Fort Myers	006242	1-015317-00 05/19	Compactor 11604 Paseo Grande Blvd 05/19	$ 4,027.88
Crystal Clean Inc.	006249	684	Gatehouse Janitorial Services 06/19	$ 180.00
Cypress Access Systems, Inc.	006232	9481	Service Contract 06/19	$ 269.20
Cypress Access Systems, Inc.	006250	9798	E-GO Plate Tags 06/19	$ 45.70
Emmanuel P. Samson	006238	MS 052219	Board of Supervisors Meeting 05/22/19	$ 200.00
Florida Power & Light Company	006243	Electric Summary 05/19	FPL Electric Summary 05/19	$ 11,302.27
Home Team Pest Defense Inc	006251	63666230	Pest Control 06/19	$ 30.00
James A. Heether	006233	JH 052219	Board of Supervisors Meeting 05/22/19	$ 200.00
Johnson Engineering, Inc.	006252	20097877-018-11	WUP Compliance Monitoring Svcs 05/19	$ 1,550.50

Paseo Community Development District

Paid Operation & Maintenance Expenditures

June 1, 2019 Through June 30, 2019

Vendor Name	Check Number	Invoice Number	Invoice Description	Invoice Amount
Lyle L. Hicks	006234	LH 052219	Board of Supervisors Meeting 05/22/19	$ 200.00
Passarella & Associates Inc.	006253	19PCD3028-3	Professional Services Through 05/31/19	$ 1,715.00
Paseo Debit Card	CD069	CD069	Debit Card Replenishment	$ 2,054.55
Pinnacle Landscapes, Inc.	006254	11024	General Monthly Maintenace 05/19	$ 19,434.55
Pinnacle Landscapes, Inc.	006254	11061	Flower Bed Corrected due to Vehicle Damage 05/19	$ 250.00
Pinnacle Landscapes, Inc.	006254	11066	Irrigation Repairs 05/19	$ 225.15
Pinnacle Landscapes, Inc.	006254	11074	Replaced Plants to Conceal Pump 06/19	$ 700.00
Rizzetta & Company, Inc.	006236	INV0000041038	District Management Fee 06/19	$ 6,789.17
Rizzetta Amenity Services, Inc.	006235	INV00000000006335	Amenity Management Services & Actual Bi-Weekly Payroll 05/19	$ 2,076.71
Rizzetta Amenity Services, Inc.	006244	INV00000000006366	Mileage & Cell Phone 05/19	$ 194.84
Rizzetta Amenity Services, Inc.	006244	INV00000000006399	Actual Bi-Weekly Payroll 06/19	$ 2,826.71
Rizzetta Technology Services, LLC	006237	INV0000004428	Website Email & Hosting Services 06/19	$ 190.00

Paseo Community Development District

Paid Operation & Maintenance Expenditures

June 1, 2019 Through June 30, 2019

Vendor Name	Check Number	Invoice Number	Invoice Description	Invoice Amount
Sharon E. Schulman	006239	SS 052219	Board of Supervisors Meeting 05/22/19	$ 200.00
Solitude Lake Management, LLC	006255	PI-A00269461	Lake & Pond Management Services 06/19	$ 2,041.00
Steven A. Brown-Cestero	006231	SB 052219	Board of Supervisors Meeting 05/22/19	$ 200.00
Suntech Electrical Contractors, Inc.	006240	7906	Damaged Pole Repair #112 05/19	$ 443.00
Suntech Electrical Contractors, Inc.	006240	7907	Replaced Wire Damage for Street lights 05/19	$ 1,085.00
Suntech Electrical Contractors, Inc.	006240	7908	Replaced Bad Photo Cell for Lake Lights 05/19	$ 193.00
Suntech Electrical Contractors, Inc.	006240	7909	Replaced Broken 9 Round Box 05/19	$ 228.00
Suntech Electrical Contractors, Inc.	006240	7910	Replaced 2 Photo Cells at Guard House 05/19	$ 365.00
Universal Protection Service, LP	006247	8532134	Security Services 01/25/19-01/31/19	$ 2,666.88
Universal Protection Service, LP	006247	8865345	Security Services 05/17/19-05/23/19	$ 2,666.88
Universal Protection Service, LP	006247	8881124	Security Services 05/24/19-05/30/19	$ 2,860.64
Universal Protection Service, LP	006247	8909749	Security Services 05/31/19-06/06/19	$ 2,666.88

Paseo Community Development District

Paid Operation & Maintenance Expenditures

June 1, 2019 Through June 30, 2019

Vendor Name	Check Number	Invoice Number	Invoice Description	Invoice Amount
Universal Protection Service, LP	006247	8943648	Security Services 06/07/19-06/13/19	$ 2,666.88
Vertex Water Features	006241	I5011	Fountian Cleaning 05/19	$ 460.00
Report Total				$ 79,463.93

RECEIVED

Barraco and Associates
2271 McGregor Boulevard, Suite 100
Fort Myers, FL 33901

Date Rec'd Rizzetta & Co, Inc JUN 14 2019
D/M approval Belinda Blandon Date 6/14/19
Date entered JUN 14 2019
Fund 001 GL 51300 OC 3103
Check #

Paseo CDD
Rizzetta & Company, Inc.
9530 Market Place Rd, Suite 206
Fort Myers, FL 33912

Invoice number 19692
Date 06/12/2019

Project **22168 Paseo CDD**

Description	Contract Amount	Percent Complete	Billed To Date	Less Previous Billing	Amount Due This Billing
01 (TM) Misc. Engineering Services	0.00	0.00	158,135.56	157,955.56	180.00
02 (TM) Updated Engineers Report	10,500.00	371.65	39,023.75	39,023.75	0.00
03 (TM) Out of Scope Services	0.00	0.00	147,374.80	141,837.30	5,537.50
04 (TM) Reimbursables	0.00	0.00	1,364.26	1,364.26	0.00
Total	10,500.00	3,294.27	345,898.37	340,180.87	5,717.50

01 (TM) Misc. Engineering Services

	Hours	Rate	Billed Amount
Project Manager			
CDD meeting	1.50	120.00	180.00
Misc. Engineering Services subtotal			180.00

03 (TM) Out of Scope Services

	Hours	Rate	Billed Amount
Construction Observer	16.00	95.00	1,520.00
Located ribbon curb cracks throughout site. *Check curb cracks and lake repairs.* *paver dip location*			
Professional Engineer	4.50	195.00	877.50
Hotwire correspondence re: plans and specs. Concrete curb maintenance correspondence. *Lake bank review and exhibit prep.* *Ribbon curb exhibit assistance.* *Falisto sidewalk drainage review.* *Ribbon curb exhibit assistance. Lake bank maintenance record exhibit.* *Review Hotwire plan.* *Correspondence re: Hotwire plan.* *Curb repair exhibit*			
Project Manager	6.25	120.00	750.00
Coordinate field review *Bid exhibit* *Curb repair exhibit and coordinate drainage pipe repair with Crocker Land Development*			
Project Technician	17.50	100.00	1,750.00
Lake Bank Maintenance Record Exhibit Phase I for Doug/Wes. *PDF. Printing for Wes.* *Curb & Paver repair exhibit*			
Planning Technician	4.00	100.00	400.00
Update CDD Maintenance Exhibits			

03 (TM) Out of Scope Services

	Hours	Rate	Billed Amount
Senior Project Technician	2.00	120.00	240.00
Processed broken curb asbuilts			
subtotal	50.25		5,537.50
Out of Scope Services subtotal			5,537.50

Invoice total **5,717.50**

Aging Summary

Invoice Number	Invoice Date	Outstanding	Current	Over 30	Over 60	Over 90	Over 120
19692	06/12/2019	5,717.50	5,717.50				
	Total	5,717.50	5,717.50	0.00	0.00	0.00	0.00

CenturyLink®

Account Name: PASEO COMM DEVELOPMENT DIST
Account Number: 311416420

RECEIVED
JUN 25 2019

P.O. Box 1319
Charlotte, NC 28201-1319

Bill Date: Jun. 13, 2019

Previous Balance	Payments	Adjustments Credits	Current Charges
564.30	0.00	0.00	590.20

Payment Summary

Previous Balance	564.30
Less Payments	0.00
Balance	564.30

Paid 5/28/19 Check 6216

Adjustments/Credits Summary

Adjustments to Previous Balance	0.00
Total Adjustments	0.00

Current Charge Summary

Monthly Charges	551.04
One-Time Charges	0.00
Usage Charges	1.56
Discount	10.00 CR
Adjustments	0.00
Taxes, Fees, and Surcharges	18.68
Late Fee	28.92
Total Current Charges	590.20

Due Date Jul. 05, 2019 **Amount Due** 1,154.50

Just a friendly reminder that your account is past due. If you have already made your payment, thank you for bringing your account up to date.

IMPORTANT NEWS

Date Rec'd Rizzetta & Co. Inc.
D/M approval Belinda Blandin Date 6/25/19
Date entered JUN 25 2019
Fund 001 GL 54100 OC 4103
Check #

PLEASE FOLD, TEAR HERE AND RETURN THIS PORTION WITH YOUR PAYMENT

FOR CHANGE OF ADDRESS OR PAYMENT AUTHORIZATION:
☐ Please check here and complete reverse. Thank You.

D

Account Number: 311416420
Amount Due By Jul. 05, 2019 ~~1,154.50~~ 541.04

62201000 C7 RP 12 20190612 NNNNNNNY 0109546 0380

PASEO COMM DEVELOPMENT DIST
12750 CITRUS PARK LN STE 115 ATTN ATT ACCT PAYABLE
TAMPA FL 33625-3784

CenturyLink
P.O. Box 1319
Charlotte, NC 28201-1319

0000311416420900000005643030000000000613190000115450990000000

CenturyLink®

Account Name: PASEO COMM DEVELOPMENT DIST
Account Number: 311416420

P.O. Box 1319
Charlotte, NC 28201-1319

Bill Date: Jun. 13, 2019

Important Notices and Information :

Allocation of charges:

Service Categories	Past Due	Current Month	Total Due
Basic Services	235.24	235.24	470.48
Other Services	329.06	354.96	684.02
All Services	564.30	590.20	1,154.50

Failure to pay Basic charges may result in the disconnection of those Services. Please contact CenturyLink regarding any questions or problems with your bill before the due date.

CenturyLink works every day to bring you solutions that best meet your total communication needs. Learn more about our value pricing that will help reduce your household expenses when you bundle all of your services with CenturyLink. You can pay your bill and check out our newest products and services by visiting www.centurylink.com .

LATE FEE REMINDER: Late fees may be charged each month for any eligible unpaid balances not paid in full by the due date listed on your bill. The methods for calculating late fee amounts vary by state and product. For more information you may access Terms and Conditions and Tariff materials at http://www.centurylink.com/tariffs.

Thank you for choosing CenturyLink for your communication needs--we value you as our customer.

Third-Party Billing Block
Cramming occurs when unauthorized charges appear on your telephone bill. To help prevent unwanted third party charges on your bill, contact CenturyLink and request, at no charge, a bill block that will prevent some third party charges such as charitable contributions, dial-up Internet by non-CenturyLink companies or other non-telecommunications charges from appearing on your bill.

Pure Broadband Package includes the following services: High Speed Internet, access line, 911 service, Outbound Call Block, Toll Restriction, Subscriber Line Charge, and non-published number.

EMBARQ Florida, Inc. DBA CenturyLink

FREE Enrollment! With Control Center, you can update your billing information, view and pay your bill and much more. Visit us online at www.centurylink.com/business/login.

CenturyLink should be notified within 90 days after the CenturyLink Bill Date of any billing discrepancies on your statement.

311416420
PASEO COMM DEVELOPMENT DIST
ATTN: ATT ACCT PAYABLES
12750 CITRUS PARK LANE Cir STE 115
TAMPA, FL 33625-0393

Address Information Changes Effective Date _____

New Address _____

City _____ State _____ Zip _____

Work Phone ( ) _____ Home Phone ( ) _____

MONTHLY AUTOPAY AUTHORIZATION FORM
I authorize CenturyLink to draft my savings or checking account for any accrued balance on my account.

(We reserve the right to revoke this if bank approval is denied)

☐ **Checking Account** ☐ **Savings Account**
(Select the type of account to be drafted and attach a voided check/savings slip.)

_____ *Signature required* _____ *Date*

Please continue to pay your bill until notified on your statement that autopay is active.

CenturyLink®

Account Name: PASEO COMM DEVELOPMENT DIST
Account Number: 311416420

P.O. Box 1319
Charlotte, NC 28201-1319

Bill Date: Jun. 13, 2019

Current Charges Summary — Service From Jun. 13, 2019

Monthly Charges	Qty	Rate	Amount
Broadband Cost Recovery Fee	3 @	3.99	11.97
Facility Relocation Cost Recovery Fee	4 @	0.53	2.12
Fed Universal Service Chg	4 @	1.52	6.08
Inside Wire Maintenance	3 @	7.00	21.00
Long Distance Line Charge	4 @	3.99	15.96
Non-Telecom Services Surcharge	1 @	2.99	2.99
Router Equip Fee	1 @	9.99	9.99
Router Equipment Fee	1 @	9.99	9.99
Static IP	1 @	10.00	10.00
Static IP - IPV4	1 @	10.00	10.00
Subscriber Line & Access Recovery Charge	4 @	10.76	43.04
CenturyLink Business Bundle B1 Primary Line	1 @	89.99	89.99
Core Connect Business Additional Line Bundle	1 @	44.00	44.00
Core Connect Business Additional Line Bundle	1 @	44.00	44.00
Core Connect Business Primary Line Bundle	1 @	129.00	129.00
Pure Business Broadband	1 @	100.91	100.91
Total Monthly Charges			**551.04**
One-time Charges			
Late Payment Fee			28.92
Total One-time Charges			**28.92**
Usage Charges	**Calls**	**Mins**	
International	13	13.0	1.56
Total Usage Charges	**13**	**13.0**	**1.56**
Discounts			
High Speed Data Discount			10.00 CR
Total Discounts			**10.00 CR**
Taxes, Fees and Surcharges			
Administrative Expense Fee			0.68
Federal Property Surcharge			2.15
Federal Universal Service Fund Surcharge			13.52
Federal and Other Cost Recovery Fee			2.33
Total Taxes, Fees and Surcharges			**18.68**

Total Current Charges **590.20**

Contact Numbers

www.centurylink.com/myaccount Pay Online
1-866-712-1996 Pay by Phone
1-800-786-6272 Customer Service
1-800-786-6272 Repair Service

Visit us online at www.centurylink.com.

Package Summary

Core Connect Business Additional Line Bundle

Package Summary

Monthly Recurring	44.00		
239-225-0845			
Multi Line 1 Party Business			
Unlimited Long Distance (Voice Only)			
Package Charges		44.00	
Core Connect Business Additional Line Bundle			
Monthly Recurring	44.00		
239-225-7791			
Multi Line 1 Party Business			
Unlimited Long Distance (Voice Only)			
Package Charges		44.00	
Core Connect Business Primary Line Bundle			
Monthly Recurring	129.00		
239-225-0782			
Multi Line 1 Party Business			
Unlimited Long Distance (Voice Only)			
eq000897732			
HSI 10M CC 3YR			
Package Charges		129.00	
Pure Business Broadband			
Monthly Recurring	100.91		
239-225-1769			
CTL102733149			
HSI 10.0M			
Package Charges		100.91	
CenturyLink Business Bundle B1 Primary Line			
Monthly Recurring	89.99		
239-225-7505			
3-Way Calling			
Call Forward Busy			
Call Forward No Answer			
Call Forwarding			
Multi Line Business			
Unlimited Long Distance (Voice Only)			
CTL106996178			
High Speed Internet Up to 10M			
F92-399-6711			
Core Service Pack Business Essential			
Package Charges		89.99	
Discounts			
High Speed Data Discount		10.00 CR	
Package Charges After Discount		79.99	
Subtotal Package			397.90
Package Taxes, Fees and Surcharges			10.27
Total Package			408.17

CenturyLink®

Account Name: PASEO COMM DEVELOPMENT DIST
Account Number: 311416420

P.O. Box 1319
Charlotte, NC 28201-1319

Bill Date: Jun. 13, 2019

Charge Detail

Local Service from JUN 13 to JUL 12

Product-ID: 239-225-0782

Monthly Charges

Facility Relocation Cost Recovery Fee	0.53		
Fed Universal Service Chg	1.52		
Subscriber Line & Access Recovery Charge	10.76		
Total Local Exchange Services		12.81	
** Inside Wire Maintenance	7.00		
Long Distance Line Charge	3.99		
Total Optional Features/Services		10.99	
Total Monthly Charges			23.80

Usage Charges

International	1.56		
Total Usage Charges			1.56

Charge Detail For 239-225-0782 25.36

Product-ID: 239-225-0845

Monthly Charges

Caller ID Number Only	0.00		
Facility Relocation Cost Recovery Fee	0.53		
Fed Universal Service Chg	1.52		
Subscriber Line & Access Recovery Charge	10.76		
Total Local Exchange Services		12.81	
** Inside Wire Maintenance	7.00		
Long Distance Line Charge	3.99		
Total Optional Features/Services		10.99	
Total Monthly Charges			23.80

Charge Detail For 239-225-0845 23.80

Product-ID: 239-225-7505

Monthly Charges

Facility Relocation Cost Recovery Fee	0.53		
Fed Universal Service Chg	1.52		
Subscriber Line & Access Recovery Charge	10.76		
Total Local Exchange Services		12.81	
Long Distance Line Charge	3.99		
Total Optional Features/Services		3.99	
Total Monthly Charges			16.80

Charge Detail For 239-225-7505 16.80

Product-ID: 239-225-7791

Monthly Charges

Facility Relocation Cost Recovery Fee	0.53		
Fed Universal Service Chg	1.52		
Subscriber Line & Access Recovery Charge	10.76		

CenturyLink®

Account Name: PASEO COMM DEVELOPMENT DIST
Account Number: 311416420

P.O. Box 1319
Charlotte, NC 28201-1319

Bill Date: Jun. 13, 2019

Charge Detail

Local Service from JUN 13 to JUL 12

Product-ID: 239-225-7791

Monthly Charges

	Total Local Exchange Services		12.81	
**	Inside Wire Maintenance	7.00		
	Long Distance Line Charge	3.99		
**	Non-Telecom Services Surcharge	2.99		
	Total Optional Features/Services		13.98	
	Total Monthly Charges			26.79

Charge Detail For 239-225-7791 26.79

Product-ID: CTL102733149

Monthly Charges

**	Broadband Cost Recovery Fee	3.99		
**	PC Security - F-Secure	0.00		
**	Router Equipment Fee	9.99		
**	Static IP - IPV4	10.00		
**	Web Hosting	0.00		
	Total Optional Features/Services		23.98	
	Total Monthly Charges			23.98

Charge Detail For CTL102733149 23.98

Product-ID: CTL106996178

Monthly Charges

**	Broadband Cost Recovery Fee	3.99		
**	Router Equip Fee	9.99		
	Total Optional Features/Services		13.98	
	Total Monthly Charges			13.98

Charge Detail For CTL106996178 13.98

Product-ID: eq000897732 2392250845

Monthly Charges

**	Broadband Cost Recovery Fee	3.99
**	PC Security - F-Secure	0.00
**	Static IP	10.00
**	Web Hosting	0.00

CenturyLink®

Account Name: PASEO COMM DEVELOPMENT DIST
Account Number: 311416420

P.O. Box 1319
Charlotte, NC 28201-1319

Bill Date: Jun. 13, 2019

Charge Detail

Local Service from JUN 13 to JUL 12

Product-ID: eq000897732 2392250845

Monthly Charges

Total Optional Features/Services	13.99	
Total Monthly Charges		13.99

Charge Detail For eq000897732	13.99
Total Charge Detail	144.70
Total Package Summary	397.90
Tax, Fees and Surcharges	18.68
Total Current Charges	561.28

** Nonregulated Charge(s) - nonpayment for NONREGULATED SERVICES OR PRODUCTS may result in the disconnection or restriction of such services, and such delinquencies may be subject to collection. Local services will not be disconnected for nonpayment of nonregulated charges. Nonpayment of toll charges may result in the disconnection of toll service, and such delinquencies may be subject to collection.

CenturyLink®

Account Name: PASEO COMM DEVELOPMENT DIST
Account Number: 311416420

P.O. Box 1319
Charlotte, NC 28201-1319

Bill Date: Jun. 13, 2019

CenturyLink Long Distance

Detailed activity on this page is informational only. This activity is billed and totaled from the charge detail page.

Recurring Charges

Long Distance Line Charge	3.99		
Total For 239-225-0782		3.99	
Long Distance Line Charge	3.99		
Total For 239-225-0845		3.99	
Long Distance Line Charge	3.99		
Total For 239-225-7505		3.99	
Long Distance Line Charge	3.99		
Total For 239-225-7791		3.99	
Total Recurring Charges			15.96

Calling Plan Summary - Informational Only

Charges in this Summary are Itemized and Totaled in Other Sections of the Bill

	Plan Summary	Monthly Amount	Usage Amount	Total Amount
V	International	0.00	1.56	1.56
	Unlimited Long Distance	0.00	0.00	0.00
	Total	0.00	1.56	1.56

Long Distance Call Detail

Item	Date	Time	Called From	Called To		Number	Call Plan	Call Type	Min	Charge
1	MAY12	12:18 pm		OAKVILLE	ON	905-467-0985	V	Direct Call	1.0	0.12
2	MAY13	08:23 am		COURTENAY	BC	778-585-2754	V	Direct Call	1.0	0.12
3	MAY13	08:31 am		MILTON	ON	905-691-5673	V	Direct Call	1.0	0.12
4	MAY13	02:45 pm		OTTAWAHULL	ON	613-371-0634	V	Direct Call	1.0	0.12
5	MAY15	08:57 am		TORONTO	ON	647-299-7099	V	Direct Call	1.0	0.12
6	MAY18	10:42 am		OAKVILLE	ON	905-208-0719	V	Direct Call	1.0	0.12
7	MAY18	02:14 pm		MILTON	ON	905-691-5673	V	Direct Call	1.0	0.12
8	MAY21	12:48 pm		TORONTO	ON	416-700-1868	V	Direct Call	1.0	0.12
9	MAY24	05:04 am		STCTNSTHLD	ON	905-933-1731	V	Direct Call	1.0	0.12
10	JUN03	12:46 pm		GUELPH	ON	519-831-5121	V	Direct Call	1.0	0.12
11	JUN04	09:53 am		OAKVILLE	ON	905-330-0060	V	Direct Call	1.0	0.12
12	JUN05	11:39 am		BURLINGTON	ON	905-630-6309	V	Direct Call	1.0	0.12
13	JUN10	07:15 pm		OSHAWA	ON	905-718-0510	V	Direct Call	1.0	0.12
	Total for	**239-225-0782**							13.0	1.56
			Total Of Itemized Calls						13.0	1.56

Taxes, Fees and Surcharges

Administrative Expense Fee	0.26	
Federal Property Surcharge	0.83	
Federal Universal Service Fund Surcharge	3.60	
Federal and Other Cost Recovery Fee	0.88	
Total Taxes, Fees and Surcharges		5.57

CenturyLink®

Account Name: PASEO COMM DEVELOPMENT DIST
Account Number: 311416420

P.O. Box 1319
Charlotte, NC 28201-1319

Bill Date: Jun. 13, 2019

CenturyLink Long Distance

Detailed activity on this page is informational only. This activity is billed and totaled from the charge detail page.

Executive Bill Summaries

Line Summary Without Pins	Calls	Mins	Amount
239-225-0782	533	187.2	1.56
239-225-7505	1	.3	0.00
Total	**534**	**187.5**	**1.56**

CenturyLink Internet Services

We appreciate your business.

For Technical Support call 1-800-786-6272.

Pay by Phone 24 Hours/7 Days a Week 1-866-712-1996.

PRISM TV customers: Support for Video or Internet call 1-866-314-4148.

INVOICE

CITY OF FORT MYERS
Utilities Department
Billing Inquiries: (239)321-8100

City of Palms

Exciting News – The City of Fort Myers Utilities Department IVR (Interactive Voice Response) is available were you may now pay your utility bill over the telephone with a credit card. Please call 877-333-0866 to pay your utility bill by telephone.

account information

ACCOUNT NAME	PASEO		
SERVICE ADDRESS			
11604 PASEO GRANDE BLVD			
ACCOUNT NUMBER	1-015317-00		
BILL DATE	06/05/19	DUE DATE	06/19/19

PREVIOUS BALANCE	CURRENT CHARGES	AMOUNT DUE
$4,712.82	$4,027.88	**$4,027.88**

amount due

Previous Balance	4,712.82
Payment on 5/20/2019- Thank you	4,712.82
Billing	4,027.88
TOTAL AMOUNT DUE	**$4,027.8**

Date	Order Number	Service Fee	Units	Amount
5/3/2019	SO#: 818016	40 YARD COMPACTOR	0.00	231.00
5/7/2019	SO#: 818184	40 YARD COMPACTOR	0.00	231.00
5/10/2019	SO#: 818682	40 YARD COMPACTOR	0.00	231.00
5/14/2019	SO#: 818954	40 YARD COMPACTOR	0.00	231.00
5/17/2019	SO#: 819368	40 YARD COMPACTOR	0.00	231.00
5/21/2019	SO#: 819473	40 YARD COMPACTOR	0.00	231.00
5/24/2019	SO#: 824312	40 YARD COMPACTOR	0.00	231.00
5/29/2019	SO#: 823689	40 YARD COMPACTOR	0.00	231.00
6/30/2019	WT2163825 SO818016	TONNAGE - SOLID WASTE	2.85	162.71
6/30/2019	WT2165959 SO818184	TONNAGE - SOLID WASTE	3.03	172.98
6/30/2019	WT2168335 SO818682	TONNAGE - SOLID WASTE	2.01	114.75
6/30/2019	WT2170661 SO818954	TONNAGE - SOLID WASTE	2.74	156.43
6/30/2019	WT2173219 SO819368	TONNAGE - SOLID WASTE	1.96	111.90
6/30/2019	WT2175131 SO819473	TONNAGE - SOLID WASTE	2.53	144.44
6/30/2019	WT2177638 SO824312	TONNAGE - SOLID WASTE	1.87	106.76
6/30/2019	WT2179597 SO823689	TONNAGE - SOLID WASTE	3.02	172.41
6/30/2019		STAND-BY CHARGE	1.00	79.50
6/30/2019		COMPACTOR TURNKEY CHARGE	1.00	318.00

KEEP THIS PORTION FOR YOUR RECORDS
PLEASE RETURN THIS PORTION ALONG WITH YOUR PAYMENT

CITY OF FORT MYERS
Utilities Department
P O Box 340
Fort Myers, FL 33902-0340

City of Palms

STATEMENT ENCLOSED

account information

ACCOUNT NAME	PASEO		
SERVICE ADDRESS			
11604 PASEO GRANDE BLVD			
ACCOUNT NUMBER	1-015317-00		
BILL DATE	06/05/19	DUE DATE	06/19/19

PREVIOUS BALANCE	CURRENT CHARGES	AMOUNT DUE
$4,712.82	$4,027.88	**$4,027.88**

ADDRESSEE

174-

PASEO
C/O RIZZETTA & COMPANY, INC
12750 CITRUS PARK LN STE 115
TAMPA, FL 33625-3784

MAKE CHECK PAYABLE TO: CITY OF FORT MYERS

CITY OF FORT MYERS
P.O. BOX 30185
TAMPA, FL 33630-3185

INVOICE

CITY OF FORT MYERS
Utilities Department
Billing Inquiries: (239)321-8100

City of Palms

account information			
ACCOUNT NAME	PASEO		
SERVICE ADDRESS			
11604 PASEO GRANDE BLVD			
ACCOUNT NUMBER	1-015317-00		
BILL DATE	06/05/19	DUE DATE	06/19/19

PREVIOUS BALANCE	CURRENT CHARGES	AMOUNT DUE
$4,712.82	$4,027.88	**$4,027.88**

5/1/2019	SO#: 818012	20 YARD RECYCLING ROLL-OFF CENTER	0.00	80.0(
5/1/2019	SO#: 818185	20 YARD RECYCLING ROLL-OFF CENTER	0.00	80.0(
5/1/2019	SO#: 818681	20 YARD RECYCLING ROLL-OFF CENTER	0.00	80.0(
5/1/2019	SO#: 818953	20 YARD RECYCLING ROLL-OFF CENTER	0.00	80.0(
5/1/2019	SO#: 819367	20 YARD RECYCLING ROLL-OFF CENTER	0.00	80.0(
5/1/2019	SO#: 819472	20 YARD RECYCLING ROLL-OFF CENTER	0.00	80.0(
5/1/2019	SO#: 824311	20 YARD RECYCLING ROLL-OFF CENTER	0.00	80.0(
5/1/2019	SO#: 823690	20 YARD RECYCLING ROLL-OFF CENTER	0.00	80.0(
		TOTAL CURRENT CHARGES		**$4,027.88**

0 - 30 days	31 - 60 days	61 - 180 days	180 + days
4,027.88			

PAST DUE AMOUNT
$0.0

RECEIVED
JUN 10 2019

VM approval Belinda Blandon Date 6/14/19
date entered JUN 14 2019
under 001 GL 53400 OC 4309
check #

City of Palms

KEEP THIS PORTION FOR YOUR RECORDS
PLEASE RETURN THIS PORTION ALONG WITH YOUR PAYMENT

CITY OF FORT MYERS
Utilities Department
P O Box 340
Fort Myers, FL 33902-0340

City of Palms

STATEMENT ENCLOSED

account information			
ACCOUNT NAME	PASEO		
SERVICE ADDRESS			
11604 PASEO GRANDE BLVD			
ACCOUNT NUMBER	1-015317-00		
BILL DATE	06/05/19	DUE DATE	06/19/19

PREVIOUS BALANCE	CURRENT CHARGES	AMOUNT DUE
$4,712.82	$4,027.88	**$4,027.88**

ADDRESSEE

174-

MAKE CHECK PAYABLE TO: CITY OF FORT MYERS

CITY OF FORT MYERS
P.O. BOX 30185
TAMPA, FL 33630-3185

Invoice

Crystal Clean (N)
3120 Winkler Ave
Suite 14
Ft. Myers, FL 33916

RECEIVED
JUN 0 3 2019

Invoice #	684
Date	6/1/2019
Due Date	6/28/2019
Terms	28th

Bill To

Paseo CDD
3434 Colwell Ave., Suite 200
Tampa, FL 33614

Servicing Address

Paseo
11980 Paseo Blvd.
Fort Myers, FL 33912

	Quantity	Rate	Amount
Weekly Cleaning Of Gatehouse (6/7/19)	1	45.00	45.00
Weekly Cleaning Of Gatehouse (6/14/19)	1	45.00	45.00
Weekly Cleaning Of Gatehouse (6/21/19)	1	45.00	45.00
Weekly Cleaning Of Gatehouse (6/28/19)	1	45.00	45.00

Date Rec'd Rizzetta & Co, Inc_____
D/M approval Belinda Blandon Date 6/6/19
Date entered JUN 0 6 2019
Fund 001 GL 52900 OC 4700
Check #_____

www.CleaningFortMyers.com

E-Mail: CrystalClean@CleaningFortMyers.com
Phone #: (239) 936-7700
Fax #: (239) 936-7065

Subtotal	$180.00
Sales Tax (0.0%)	$0.00
Total	$180.00
Payments/Credits	$0.00
Balance Due	$180.00

CYPRESS ACCESS SYSTEMS, INC

Date	Invoice #
5/7/2019	9481

25270 Bernwood Dr. Ste 7
Bonita Springs, FL 34135

Bill To
Paseo CDD c/o Rizzetta & Company, Inc. 9530 Marketplace Road, Suite 206 Ft. Myers, FL 33912

RECEIVED
MAY 15 2019

Phone #	Fax #
239-494-8604	239-390-2621
carrie@cypressaccess.com	

S.O. No.	Terms
SC-JUN	Due on receipt

Item	Quantity	Description	Rate	Amount
SC/PM/LP	1	SERVICE CONTRACT - June Billing	269.20	269.20
		Date Rec'd Rizzetta & Co, Inc_____ D/M approval Belinda Blandon Date 5/17/19 Date entered MAY 16 2019 Fund 001 GL 53900 OC 4699 Check #_____		
		We appreciate your business.		
		Balance Due		$269.20

CYPRESS ACCESS SYSTEMS, INC

Date	Invoice #
6/17/2019	9798

25270 Bernwood Dr. Ste 7
Bonita Springs, FL 34135

Bill To
Paseo CDD c/o Rizzetta & Company, Inc. 9530 Marketplace Road, Suite 206 Ft. Myers, FL 33912

RECEIVED
JUN 19 2019

Phone #	Fax #
239-494-8604	239-390-2621
carrie@cypressaccess.com	

S.O. No.	Terms
21585	Due on receipt

Item	Quantity	Description	Rate	Amount
13-0711-951	1	eGo Plus License Plate Tags FC: 189 #32904	36.40	36.40
SHIPPING	1	Shipping Charges	9.30	9.30
		Date Rec'd Rizzetta & Co, Inc_____ D/M approval Belinda Blandon Date 6/21/19 Date entered JUN 20 2019 Fund 001 GL 52900 OC 46631 Check #_____		
		We appreciate your business.		
		Balance Due		$45.70

21585

CYPRESS ACCESS SYSTEMS, INC

25270 Bernwood Dr. Suite #7 • Bonita Springs, FL 34135 • Phone 239-494-8604
www.cyressaccess.com • www.checkpointaccess.com
State of Florida Contractor License # ES12001419

Service Ticket

Customer: Paseo Work Ordered By: Kari Date: 6/5/19

Billing Address: Rizzetta

☐ Service Jobsite Address:

☐ Install Q#

☐ After Hours

Description of Request:

Order 1 License Plate Transponder

Action Taken:

FC:189 # 32904

Parts Used:

Qty	P/N	Description	Price Ea.	Price Tot.
1	LPT	FC:189 # 32904	36.40	
1		Shipping	9.30	
			Parts Total	

Labor:

Technician	Date	Time Start	Time Stop	Time Tot.
			Labor Total	

Travel

Parts

Labor

Total Due

X Carrie C. 6/5

Service call performed as described above **Date**

Follow Up:

Proof of Delivery

Dear Customer,

This notice serves as proof of delivery for the shipment listed below.

Tracking Number

1ZR212400398350915

Weight

1.00 LBS

Service

UPS Ground

Shipped / Billed On

06/05/2019

Delivered On

06/06/2019 2:06 P.M.

Delivered To

11980 PASEO GRANDE BLVD
GUARDA
FORT MYERS, FL, 33912, US

Received By

HUDSON

Left At

Inside Delivery

Thank you for giving us this opportunity to serve you. Details are only available for shipments delivered within the last 120 days. Please print for your records if you require this information after 120 days.

Sincerely,

UPS

Tracking results provided by UPS: 06/17/2019 1:18 P.M. EST

Paseo Community Development District
Meeting Date: May 22, 2019

SUPERVISOR PAY REQUEST

RECEIVED
MAY 28 2019

Name of Board Supervisor	Check if present	Check if paid
Manny Samson Phone	✓	X
Steve Brown	✓	X
Jim Heether	✓	X
Sharon Schulman	✓	X
Lyle Hicks	✓	X

(*) Does not get paid

EXTENDED MEETING TIMECARD

Meeting Start Time:	11:15 am
Meeting End Time:	1:07 pm
Total Meeting Time:	1 hr 53 mins

Time Over _____ () Hours:	

Total at $175 per Hour:	

DM Signature: _____

Date Rec'd Rizzetta & Co, Inc _____

D/M approval Belinda Blandon Date 5/30/19

Date entered MAY 29 2019

Fund 001 GL 51100 OC 1101

Check # _____

PASEO CDD **FPL Electric Summary**

Month: 05/19 Dated 06/04

For: 05/03/19-06/04/19

Account	Location	Service Address	Code	Amount
01665-48552	FOUNTAINS	23 Herminia St # Fntn	001 53100 4302	$ 277.30
04931-75376	FOUNTAINS	10959 Esteban Dr #Fntn	001 53100 4302	$ 482.58
10354-74582	FOUNTAINS	11138 Paseo Dr # Fntn	001 53100 4302	$ 362.82
15270-01067	FOUNTAINS	11141 Esteban Dr #LF-A	001 53100 4302	$ 500.19
23770-96140	IRRIGATION	8201 Penzance Blvd # Well	001 53100 4306	$ 1,898.03
24743-50267	IRRIGATION	1 Paseo Grande BLvd # Pumps	001 53100 4306	$ 764.63
25633-32200	STREET LIGHTS	11803 Nalds St # SL	001 53100 4307	$ 126.06
27060-67036	FOUNTAINS	9101 Penzance Blvd # Fntn	001 53100 4302	$ 1,049.15
27900-20180	STREET LIGHTS	11030 Esteban Dr #SL	001 53100 4302	$ 132.26
28147-18504	FOUNTAINS	11812 Nalda St # Fntn	001 53100 4302	$ 243.05
28467-91263	STREET LIGHTS	11170 Paseo Dr # SL	001 53100 4307	$ 37.82
42347-70065	FOUNTAINS	8303 Adelio Ln #LF-E	001 53100 4302	$ 277.09
44616-42516	COMPACTOR	11604 Paseo Grande Blvd # Trash	001 53100 4305	$ 34.37
45446-69478	STREET LIGHTS	8366 Dario Way # SL-2	001 53100 4307	$ 27.76
51072-41068	FOUNTAINS	11141 Esteban Dr #LF-C	001 53100 4302	$ 358.87
52896-15485	STREET LIGHTS	8307 Bibiana Way # SL	001 53100 4307	$ 369.17
53689-07407	FOUNTAINS	8307 Bibiana Way # Fntn	001 53100 4302	$ 969.45
60702-89472	STREET LIGHTS	11060 Esteban Dr #SL-3	001 53100 4307	$ 31.47
66280-27523	STREET LIGHTS	8201 Penzance Blvd # SL	001 53100 4307	$ 21.47
66689-00456	STREET LIGHTS	11964 Tulio Way # SL	001 53100 4307	$ 138.45
67803-16599	IRRIGATION	8446 Olinda Way #Irr	001 53100 4306	$ 12.86
73070-05293	STREET LIGHTS	11442 Paseo Grande Blvd # SL	001 53100 4307	$ 73.31
76250-95372	FOUNTAINS	11047 Esteban Dr # Fntn	001 53100 4302	$ 376.87
80522-99453	ENTRY/GATE	11980 Paseo Grande Blvd # Grd Hse	001 53100 4301	$ 922.29
83715-35140	STREET LIGHTS	11442 Paseo Grande Blvd # St Lights	001 53100 4307	$ 105.85
89871-07540	SIGN	0 Paseo Dr #Sign	001 53100 4301	$ 68.50
90833-40068	FOUNTAINS	8303 Adelio Ln #LF-D	001 53100 4302	$ 299.91
91696-74562	IRRIGATION	8600 Falisto PL # Pump	001 53100 4306	$ 727.91
92030-59473	STREET LIGHTS	8305 Adelio Ln # SL-1	001 53100 4307	$ 112.84
99853-21067	FOUNTAINS	11141 Esteban Dr #LF-B	001 53100 4302	$ 480.28
56759-56527	IRRIGATION	11197 Paseo Dr #Pump	001 53100 4306	$ 19.66
		TOTAL		
			Summary	
		ELECTRIC-UTILITY ENTRY/GATE	**001 53100 4301**	**990.79**
		ELECTRIC-FOUNTAIN K	**001 53100 4302**	**5,809.82**
		ELECTRIC-UTILITY COMPACTOR K	**001 53100 4305**	**34.37**
		ELECTRIC-UTILITY IRRIGATION	**001 53100 4306**	**3,423.09**
		ELECTRIC-UTILITY SERVICES K	**001 53100 4307**	**1,044.20**
			Total	**11,302.27**

Date Rec'd Rizzetta & Co, Inc_____

D/M approval *Belinda Blandon* Date 6/14/19

Date entered JUN 1 4 2019

Fund 001 GL 53100 OC KK

Check #_____

Your electric statement

For: May 03 2019 to Jun 04 2019 (32 days)
Customer name: PASEO CDD
Service address: 23 HERMINIA ST #FNTN

Account number: 01665-48552

Statement date: Jun 04 2019
Next meter reading: Jul 03 2019

Amount of your last bill	Payments (-)	Additional activity (+ or -)	Balance before new charges (=)	New charges (+)	Total amount you owe (=)	New charges due by
265.66	265.66 CR	0.00	0.00	277.30	**$277.30**	**Jun 25 2019**

Meter reading - Meter KCD4989

Current reading	45544
Previous reading	- 42888
kWh used	**2656**

Energy usage

	Last Year	This Year
kWh this month	1714	2656
Service days	32	32
kWh per day	53	83

***The electric service amount includes the following charges:**

Customer charge:	$10.54
Fuel: *($0.025630 per kWh)*	$68.07
Non-fuel: *($0.065310 per kWh)*	$173.47

Enroll now in FPL Budget Billing by paying $263.17 in 1 payment by the due date instead of $277.30. Your bill will be about the same each month & stabilized year-round. Learn more at FPL.com/bb

Amount of your last bill		265.66
Payment received - Thank you		265.66 CR
Balance before new charges		$0.00
New charges (Rate: GS-1 GENERAL SVC NON-DEMAND / BUSINESS)		
Electric service amount	252.08**	
Storm charge	3.17	
Gross receipts tax	6.54	
Franchise charge	15.51	
Total new charges		$277.30

Total amount you owe **$277.30**

- Payment received after **August 26, 2019** is considered **LATE**; a late payment charge of **1%** will apply.
- Don't let the summer heat up your bill. During the summer your A/C works longer. Set your thermostat to 78 degrees to save money. **Learn more at FPL.com/SummerIsHere.**

Please have your account number ready when contacting FPL.

Customer service:	1-800-375-2434
Outside Florida:	1-800-226-3545
To report power outages:	1-800-4OUTAGE (468-8243)
Hearing/speech impaired:	711 (Relay Service)
Online at:	**www.FPL.com**

FPL

Your electric statement

For: May 03 2019 to Jun 04 2019 (32 days)
Customer name: PASEO CDD
Service address: 10959 ESTEBAN DR # FNTN

Account number: 04931-75376

Statement date: Jun 04 2019
Next meter reading: Jul 03 2019

Amount of your last bill	Payments (-)	Additional activity (+ or -)	Balance before new charges (=)	New charges (+)	Total amount you owe (=)	New charges due by
453.27	453.27 CR	0.00	0.00	482.58	**$482.58**	**Jun 25 2019**

Meter reading - Meter ACD8688

Current reading	27697
Previous reading	- 22990
kWh used	**4707**

Energy usage

	Last Year	This Year
kWh this month	4854	4707
Service days	32	32
kWh per day	152	147

***The electric service amount includes the following charges:**

Customer charge:	$10.54
Fuel:	$120.64
($0.025630 per kWh)	
Non-fuel:	$307.42
($0.065310 per kWh)	

Enroll now in FPL Budget Billing by paying $445.85 in 1 payment by the due date instead of $482.58. Your bill will be about the same each month & stabilized year-round. Learn more at FPL.com/bb

Amount of your last bill		453.27
Payment received - Thank you		453.27 CR
Balance before new charges		$0.00
New charges (Rate: GS-1 GENERAL SVC NON-DEMAND / BUSINESS)		
Electric service amount	438.60**	
Storm charge	5.60	
Gross receipts tax	11.39	
Franchise charge	26.99	
Total new charges		$482.58

Total amount you owe **$482.58**

- Payment received after **August 26, 2019** is considered **LATE**; a late payment charge of **1%** will apply.
- Don't let the summer heat up your bill. During the summer your A/C works longer. Set your thermostat to 78 degrees to save money. **Learn more at FPL.com/SummerIsHere.**

Please have your account number ready when contacting FPL.

Customer service:	1-800-375-2434
Outside Florida:	1-800-226-3545
To report power outages:	1-800-4OUTAGE (468-8243)
Hearing/speech impaired:	711 (Relay Service)
Online at:	**www.FPL.com**

FPL

Your electric statement

For: May 03 2019 to Jun 04 2019 (32 days)
Customer name: PASEO CDD
Service address: 11138 PASEO DR # FNTN

Account number: 10354-74582

Statement date: Jun 04 2019
Next meter reading: Jul 03 2019

Amount of your last bill	Payments (-)	Additional activity (+ or -)	Balance before new charges (=)	New charges (+)	Total amount you owe (=)	New charges due by
342.46	342.46 CR	3.56 CR	3.56 CR	366.38	**$362.82**	**Jun 25 2019**

Meter reading - Meter ACD4412

Current reading	26553
Previous reading	- 23007
kWh used	**3546**

Energy usage

	Last Year	This Year
kWh this month	3390	3546
Service days	32	32
kWh per day	106	111

***The electric service amount includes the following charges:**

Customer charge:	$10.54
Fuel: *($0.025630 per kWh)*	$90.88
Non-fuel: *($0.065310 per kWh)*	$231.60

Amount of your last bill		342.46
Payment received - Thank you		342.46CR
Additional activity:		
Deposit interest		3.56CR
Balance before new charges		$3.56CR
New charges (Rate: GS-1 GENERAL SVC NON-DEMAND / BUSINESS)		
Electric service amount	333.02**	
Storm charge	4.22	
Gross receipts tax	8.65	
Franchise charge	20.49	
Total new charges		$366.38
Total amount you owe		**$362.82**

- Payment received after **August 26, 2019** is considered **LATE**; a late payment charge of **1%** will apply.
- Don't let the summer heat up your bill. During the summer your A/C works longer. Set your thermostat to 78 degrees to save money. **Learn more at FPL.com/SummerIsHere**.

Please have your account number ready when contacting FPL.

Customer service:	1-800-375-2434
Outside Florida:	1-800-226-3545
To report power outages:	1-800-4OUTAGE (468-8243)
Hearing/speech impaired:	711 (Relay Service)
Online at:	**www.FPL.com**

FPL

Your electric statement

For: May 03 2019 to Jun 04 2019 (32 days)
Customer name: PASEO CDD
Service address: 11141 ESTEBAN DR # LF-A

Account number: 15270-01067

Statement date: Jun 04 2019
Next meter reading: Jul 03 2019

Amount of your last bill	Payments (-)	Additional activity (+ or -)	Balance before new charges (=)	New charges (+)	Total amount you owe (=)	New charges due by
472.25	472.25 CR	0.00	0.00	500.19	**$500.19**	**Jun 25 2019**

Meter reading - Meter ACD2824

Current reading	92951
Previous reading	- 88068
kWh used	**4883**

Energy usage

	Last Year	This Year
kWh this month	3876	4883
Service days	32	32
kWh per day	121	153

***The electric service amount includes the following charges:**

Customer charge:	$10.54
Fuel:	$125.15
($0.025630 per kWh)	
Non-fuel:	$318.91
($0.065310 per kWh)	

Enroll now in FPL Budget Billing by paying $352.24 in 1 payment by the due date instead of $500.19. Your bill will be about the same each month & stabilized year-round. Learn more at FPL.com/bb

Amount of your last bill		472.25
Payment received - Thank you		472.25 CR
Balance before new charges		$0.00
New charges (Rate: GS-1 GENERAL SVC NON-DEMAND / BUSINESS)		
Electric service amount	454.60**	
Storm charge	5.81	
Gross receipts tax	11.81	
Franchise charge	27.97	
Total new charges		$500.19

Total amount you owe **$500.19**

- Payment received after **August 26, 2019** is considered **LATE**; a late payment charge of **1%** will apply.
- Don't let the summer heat up your bill. During the summer your A/C works longer. Set your thermostat to 78 degrees to save money. **Learn more at FPL.com/SummerIsHere.**

Please have your account number ready when contacting FPL.

Customer service:	1-800-375-2434
Outside Florida:	1-800-226-3545
To report power outages:	1-800-4OUTAGE (468-8243)
Hearing/speech impaired:	711 (Relay Service)
Online at:	**www.FPL.com**

FPL

Your electric statement

For: May 03 2019 to Jun 04 2019 (32 days)
Customer name: PASEO CDD
Service address: 8201 PENZANCE BLVD #WELL

Account number: 23770-96140

Statement date: Jun 04 2019
Next meter reading: Jul 03 2019

Amount of your last bill	Payments (-)	Additional activity (+ or -)	Balance before new charges (=)	New charges (+)	Total amount you owe (=)	New charges due by
1,434.63	1,434.63 CR	0.00	0.00	1,898.03	**$1,898.03**	**Jun 25 2019**

Meter reading - Meter KNJ7939

Current reading	39660
Previous reading	- 19407
kWh used	**20253**
Demand reading	63.36
Demand kW	**63**

Energy usage

	Last Year	This Year
kWh this month	21571	20253
Service days	32	32
kWh per day	674	632

***The electric service amount includes the following charges:**

Customer charge:	$26.32
Fuel: *($0.025630 per kWh)*	$519.08
Non-fuel: *($0.023490 per kWh)*	$475.74
Demand: *($11.24 per kW)*	$708.12

Enroll now in FPL Budget Billing by paying $1,423.15 in 1 payment by the due date instead of $1,898.03. Your bill will be about the same each month & stabilized year-round. Learn more at FPL.com/bb

Amount of your last bill		1,434.63
Payment received - Thank you		1,434.63 CR
Balance before new charges		$0.00
New charges (Rate: GSD-1 GENERAL SERVICE DEMAND)		
Electric service amount	1,729.26**	
Storm charge	17.82	
Gross receipts tax	44.80	
Franchise charge	106.15	
Total new charges		$1,898.03
Total amount you owe		**$1,898.03**

- Payment received after **August 26, 2019** is considered **LATE**; a late payment charge of **1%** will apply.
- Don't let the summer heat up your bill. During the summer your A/C works longer. Set your thermostat to 78 degrees to save money. **Learn more at FPL.com/SummerIsHere.**

Please have your account number ready when contacting FPL.

Customer service:	1-800-375-2434
Outside Florida:	1-800-226-3545
To report power outages:	1-800-4OUTAGE (468-8243)
Hearing/speech impaired:	711 (Relay Service)
Online at:	**www.FPL.com**

FPL

Your electric statement

For: May 03 2019 to Jun 04 2019 (32 days)
Customer name: PASEO CDD
Service address: 1 PASEO GRANDE BLVD # PUMPS

Account number: 24743-50267

Statement date: Jun 04 2019
Next meter reading: Jul 03 2019

Amount of your last bill	Payments (-)	Additional activity (+ or -)	Balance before new charges (=)	New charges (+)	Total amount you owe (=)	New charges due by
719.98	719.98 CR	0.00	0.00	764.63	**$764.63**	**Jun 25 2019**

Meter reading - Meter KN76510

Current reading	87932
Previous reading	- 80407
kWh used	**7525**

Energy usage

	Last Year	This Year
kWh this month	8128	7525
Service days	32	32
kWh per day	254	235

****The electric service amount includes the following charges:**

Customer charge:	$10.54
Fuel: *($0.025630 per kWh)*	$192.87
Non-fuel: *($0.065310 per kWh)*	$491.45

Amount of your last bill		719.98
Payment received - Thank you		719.98 CR
Balance before new charges		$0.00
New charges (Rate: GS-1 GENERAL SVC NON-DEMAND / BUSINESS)		
Electric service amount	694.86**	
Storm charge	8.96	
Gross receipts tax	18.05	
Franchise charge	42.76	
Total new charges		$764.63

Total amount you owe **$764.63**

- Payment received after **August 26, 2019** is considered **LATE**; a late payment charge of **1%** will apply.
- Don't let the summer heat up your bill. During the summer your A/C works longer. Set your thermostat to 78 degrees to save money. **Learn more at FPL.com/SummerIsHere.**

Please have your account number ready when contacting FPL.

Customer service:	1-800-375-2434
Outside Florida:	1-800-226-3545
To report power outages:	1-800-4OUTAGE (468-8243)
Hearing/speech impaired:	711 (Relay Service)
Online at:	**www.FPL.com**

FPL

Your electric statement

For: May 03 2019 to Jun 04 2019 (32 days)
Customer name: PASEO CDD
Service address: 11803 NALDA ST # SL

Account number: 25633-32200

Statement date: Jun 04 2019
Next meter reading: Jul 03 2019

Amount of your last bill	Payments (-)	Additional activity (+ or -)	Balance before new charges (=)	New charges (+)	Total amount you owe (=)	New charges due by
130.46	130.46 CR	8.91 CR	8.91 CR	134.97	**$126.06**	**Jun 25 2019**

Meter reading - Meter KN76511

Current reading	60332
Previous reading	- 59098
kWh used	**1234**

Energy usage

	Last Year	This Year
kWh this month	5609	1234
Service days	32	32
kWh per day	175	38

****The electric service amount includes the following charges:**

Customer charge:	$10.54
Fuel: *($0.025630 per kWh)*	$31.63
Non-fuel: *($0.065310 per kWh)*	$80.59

Amount of your last bill		130.46
Payment received - Thank you		130.46CR
Additional activity:		
Deposit interest		8.91CR
Balance before new charges		$8.91CR
New charges (Rate: GS-1 GENERAL SVC NON-DEMAND / BUSINESS)		
Electric service amount	122.76**	
Storm charge	1.47	
Gross receipts tax	3.19	
Franchise charge	7.55	
Total new charges		$134.97
Total amount you owe		**$126.06**

- Payment received after **August 26, 2019** is considered **LATE**; a late payment charge of **1%** will apply.
- Don't let the summer heat up your bill. During the summer your A/C works longer. Set your thermostat to 78 degrees to save money. **Learn more at FPL.com/SummerIsHere.**

Please have your account number ready when contacting FPL.

Customer service:	1-800-375-2434
Outside Florida:	1-800-226-3545
To report power outages:	1-800-4OUTAGE (468-8243)
Hearing/speech impaired:	711 (Relay Service)
Online at:	**www.FPL.com**

FPL

Your electric statement

For: May 03 2019 to Jun 04 2019 (32 days)
Customer name: PASEO CDD
Service address: 9101 PENZANCE BLVD # FNTN

Account number: 27060-67036

Statement date: Jun 04 2019
Next meter reading: Jul 03 2019

Amount of your last bill	Payments (-)	Additional activity (+ or -)	Balance before new charges (=)	New charges (+)	Total amount you owe (=)	New charges due by
1,036.42	1,036.42 CR	29.55 CR	29.55 CR	1,078.70	**$1,049.15**	**Jun 25 2019**

Meter reading - Meter KN76513

Current reading	97982
Previous reading	- 84495
kWh used	**13487**
Demand reading	25.75
Demand kW	**26**

Energy usage

	Last Year	This Year
kWh this month	950	13487
Service days	32	32
kWh per day	29	421

***The electric service amount includes the following charges:**

Customer charge:	$26.32
Fuel: *($0.025630 per kWh)*	$345.67
Non-fuel: *($0.023490 per kWh)*	$316.81
Demand: *($11.24 per kW)*	$292.24

Amount of your last bill		1,036.42
Payment received - Thank you		1,036.42 CR
Additional activity:		
Deposit interest		29.55CR
Balance before new charges		$29.55CR
New charges (Rate: GSD-1 GENERAL SERVICE DEMAND)		
Electric service amount	981.04**	
Storm charge	11.87	
Gross receipts tax	25.46	
Franchise charge	60.33	
Total new charges		$1,078.70
Total amount you owe		**$1,049.15**

- Payment received after **August 26, 2019** is considered **LATE**; a late payment charge of **1%** will apply.
- Don't let the summer heat up your bill. During the summer your A/C works longer. Set your thermostat to 78 degrees to save money. **Learn more at FPL.com/SummerIsHere**.

Please have your account number ready when contacting FPL.

Customer service:	1-800-375-2434
Outside Florida:	1-800-226-3545
To report power outages:	1-800-4OUTAGE (468-8243)
Hearing/speech impaired:	711 (Relay Service)
Online at:	**www.FPL.com**

FPL

Your electric statement

For: May 03 2019 to Jun 04 2019 (32 days)
Customer name: PASEO CDD
Service address: 11030 ESTEBAN DR # SL

Account number: 27900-20180

Statement date: Jun 04 2019
Next meter reading: Jul 03 2019

Amount of your last bill	Payments (-)	Additional activity (+ or -)	Balance before new charges (=)	New charges (+)	Total amount you owe (=)	New charges due by
115.67	115.67 CR	0.00	0.00	132.26	**$132.26**	**Jun 25 2019**

Meter reading - Meter AC92937

Current reading	06630
Previous reading	- 05423
kWh used	**1207**

Energy usage

	Last Year	This Year
kWh this month	2201	1207
Service days	32	32
kWh per day	69	38

****The electric service amount includes the following charges:**

Customer charge:	$10.54
Fuel:	$30.94
($0.025630 per kWh)	
Non-fuel:	$78.83
($0.065310 per kWh)	

Amount of your last bill		115.67
Payments received - Thank you		115.67 CR
Balance before new charges		$0.00
New charges (Rate: GS-1 GENERAL SVC NON-DEMAND / BUSINESS)		
Electric service amount	120.31**	
Storm charge	1.43	
Gross receipts tax	3.12	
Franchise charge	7.40	
Total new charges		$132.26

Total amount you owe **$132.26**

- Payment received after **August 26, 2019** is considered **LATE;** a late payment charge of **1%** will apply.
- Don't let the summer heat up your bill. During the summer your A/C works longer. Set your thermostat to 78 degrees to save money. **Learn more at FPL.com/SummerIsHere.**

Please have your account number ready when contacting FPL.

Customer service:	1-800-375-2434
Outside Florida:	1-800-226-3545
To report power outages:	1-800-4OUTAGE (468-8243)
Hearing/speech impaired:	711 (Relay Service)
Online at:	**www.FPL.com**

FPL

Your electric statement

For: May 03 2019 to Jun 04 2019 (32 days)
Customer name: PASEO CDD
Service address: 11812 NALDA ST # FNTN

Account number: 28147-18504

Statement date: Jun 04 2019
Next meter reading: Jul 03 2019

Amount of your last bill	Payments (-)	Additional activity (+ or -)	Balance before new charges (=)	New charges (+)	Total amount you owe (=)	New charges due by
228.54	228.54 CR	0.00	0.00	243.05	**$243.05**	**Jun 25 2019**

Meter reading - Meter KN94729

Current reading	93519
Previous reading	- 91205
kWh used	**2314**

Energy usage

	Last Year	This Year
kWh this month	2300	2314
Service days	32	32
kWh per day	71	72

***The electric service amount includes the following charges:**

Customer charge:	$10.54
Fuel:	$59.31
($0.025630 per kWh)	
Non-fuel:	$151.12
($0.065310 per kWh)	

Enroll now in FPL Budget Billing by paying $226.89 in 1 payment by the due date instead of $243.05. Your bill will be about the same each month & stabilized year-round. Learn more at FPL.com/bb

Amount of your last bill		228.54
Payment received - Thank you		228.54 CR
Balance before new charges		$0.00
New charges (Rate: GS-1 GENERAL SVC NON-DEMAND / BUSINESS)		
Electric service amount	220.97**	
Storm charge	2.75	
Gross receipts tax	5.74	
Franchise charge	13.59	
Total new charges		$243.05

Total amount you owe **$243.05**

- Payment received after **August 26, 2019** is considered **LATE**; a late payment charge of **1%** will apply.
- Don't let the summer heat up your bill. During the summer your A/C works longer. Set your thermostat to 78 degrees to save money. **Learn more at FPL.com/SummerIsHere.**

Please have your account number ready when contacting FPL.

Customer service:	1-800-375-2434
Outside Florida:	1-800-226-3545
To report power outages:	1-800-4OUTAGE (468-8243)
Hearing/speech impaired:	711 (Relay Service)
Online at:	**www.FPL.com**

FPL

Your electric statement

For: May 03 2019 to Jun 04 2019 (32 days)
Customer name: PASEO CDD
Service address: 11170 PASEO DR # SL

Account number: 28467-91263

Statement date: Jun 04 2019
Next meter reading: Jul 03 2019

Amount of your last bill	Payments (-)	Additional activity (+ or -)	Balance before new charges (=)	New charges (+)	Total amount you owe (=)	New charges due by
41.35	41.35 CR	4.45 CR	4.45 CR	42.27	**$37.82**	**Jun 25 2019**

Meter reading - Meter AC01174

Current reading	24794
Previous reading	- 24486
kWh used	**308**

Energy usage

	Last Year	This Year
kWh this month	1106	308
Service days	32	32
kWh per day	35	10

***The electric service amount includes the following charges:**

Customer charge:	$10.54
Fuel:	$7.89
($0.025630 per kWh)	
Non-fuel:	$20.11
($0.065310 per kWh)	

Amount of your last bill		41.35
Payment received - Thank you		41.35CR
Additional activity:		
Deposit interest		4.45CR
Balance before new charges		$4.45CR
New charges (Rate: GS-1 GENERAL SVC NON-DEMAND / BUSINESS)		
Electric service amount	38.54**	
Storm charge	0.37	
Gross receipts tax	1.00	
Franchise charge	2.36	
Total new charges		$42.27
Total amount you owe		**$37.82**

- Payment received after **August 26, 2019** is considered **LATE**; a late payment charge of **1%** will apply.
- Don't let the summer heat up your bill. During the summer your A/C works longer. Set your thermostat to 78 degrees to save money. **Learn more at FPL.com/SummerIsHere.**

Please have your account number ready when contacting FPL.

Customer service:	1-800-375-2434
Outside Florida:	1-800-226-3545
To report power outages:	1-800-4OUTAGE (468-8243)
Hearing/speech impaired:	711 (Relay Service)
Online at:	**www.FPL.com**

FPL

Your electric statement

For: May 03 2019 to Jun 04 2019 (32 days)
Customer name: PASEO CDD
Service address: 11604 PASEO GRANDE BLVD # TRASH

Account number: 44616-42516

Statement date: Jun 04 2019
Next meter reading: Jul 03 2019

Amount of your last bill	Payments (-)	Additional activity (+ or -)	Balance before new charges (=)	New charges (+)	Total amount you owe (=)	New charges due by
30.86	30.86 CR	0.00	0.00	34.37	**$34.37**	**Jun 25 2019**

Meter reading - Meter KJ47693

Current reading	07419
Previous reading	- 07190
kWh used	**229**

Energy usage

	Last Year	This Year
kWh this month	185	229
Service days	32	32
kWh per day	5	7

****The electric service amount includes the following charges:**

Customer charge:	$10.54
Fuel:	$5.87
($0.025630 per kWh)	
Non-fuel:	$14.96
($0.065310 per kWh)	

Enroll now in FPL Budget Billing by paying $29.03 in 1 payment by the due date instead of $34.37. Your bill will be about the same each month & stabilized year-round. Learn more at FPL.com/bb

Amount of your last bill		30.86
Payment received - Thank you		30.86CR
Balance before new charges		$0.00
New charges (Rate: GS-1 GENERAL SVC NON-DEMAND / BUSINESS)		
Electric service amount	31.37**	
Storm charge	0.27	
Gross receipts tax	0.81	
Franchise charge	1.92	
Total new charges		$34.37

Total amount you owe **$34.37**

- Payment received after **August 26, 2019** is considered **LATE**; a late payment charge of **1%** will apply.
- Don't let the summer heat up your bill. During the summer your A/C works longer. Set your thermostat to 78 degrees to save money. **Learn more at FPL.com/SummerIsHere.**

Please have your account number ready when contacting FPL.

Customer service:	1-800-375-2434
Outside Florida:	1-800-226-3545
To report power outages:	1-800-4OUTAGE (468-8243)
Hearing/speech impaired:	711 (Relay Service)
Online at:	**www.FPL.com**

FPL

Your electric statement

For: May 03 2019 to Jun 04 2019 (32 days)
Customer name: PASEO CDD
Service address: 8366 DARIO WAY # SL-2

Account number: 45446-69478

Statement date: Jun 04 2019
Next meter reading: Jul 03 2019

Amount of your last bill	Payments (-)	Additional activity (+ or -)	Balance before new charges (=)	New charges (+)	Total amount you owe (=)	New charges due by
25.75	25.75 CR	0.00	0.00	27.76	**$27.76**	**Jun 25 2019**

Meter reading - Meter ACD3090

Current reading	68507
Previous reading	- 68344
kWh used	**163**

Energy usage

	Last Year	This Year
kWh this month	751	163
Service days	32	32
kWh per day	23	5

***The electric service amount includes the following charges:**

Customer charge:	$10.54
Fuel: *($0.025630 per kWh)*	$4.18
Non-fuel: *($0.065310 per kWh)*	$10.64

Amount of your last bill		25.75
Payment received - Thank you		25.75 CR
Balance before new charges		$0.00
New charges (Rate: GS-1 GENERAL SVC NON-DEMAND / BUSINESS)		
Electric service amount	25.36**	
Storm charge	0.19	
Gross receipts tax	0.66	
Franchise charge	1.55	
Total new charges		$27.76

Total amount you owe **$27.76**

- Payment received after **August 26, 2019** is considered **LATE**; a late payment charge of **1%** will apply.
- Don't let the summer heat up your bill. During the summer your A/C works longer. Set your thermostat to 78 degrees to save money. **Learn more at FPL.com/SummerIsHere.**

Please have your account number ready when contacting FPL.

Customer service:	1-800-375-2434
Outside Florida:	1-800-226-3545
To report power outages:	1-800-4OUTAGE (468-8243)
Hearing/speech impaired:	711 (Relay Service)
Online at:	**www.FPL.com**

Your electric statement

For: May 03 2019 to Jun 04 2019 (32 days)
Customer name: PASEO CDD
Service address: 11141 ESTEBAN DR # LF-C

Account number: 51072-41068

Statement date: Jun 04 2019
Next meter reading: Jul 03 2019

Amount of your last bill	Payments (-)	Additional activity (+ or -)	Balance before new charges (=)	New charges (+)	Total amount you owe (=)	New charges due by
327.16	327.16 CR	0.00	0.00	358.87	**$358.87**	**Jun 25 2019**

Meter reading - Meter ACD3137

Current reading	47467
Previous reading	- 43996
kWh used	**3471**

Energy usage

	Last Year	This Year
kWh this month	2621	3471
Service days	32	32
kWh per day	82	108

***The electric service amount includes the following charges:**

Customer charge:	$10.54
Fuel: *($0.025630 per kWh)*	$88.96
Non-fuel: *($0.065310 per kWh)*	$226.70

Enroll now in FPL Budget Billing by paying $307.26 in 1 payment by the due date instead of $358.87. Your bill will be about the same each month & stabilized year-round. Learn more at FPL.com/bb

Amount of your last bill		327.16
Payment received - Thank you		327.16CR
Balance before new charges		$0.00
New charges (Rate: GS-1 GENERAL SVC NON-DEMAND / BUSINESS)		
Electric service amount	326.20**	
Storm charge	4.13	
Gross receipts tax	8.47	
Franchise charge	20.07	
Total new charges		$358.87

Total amount you owe **$358.87**

- Payment received after **August 26, 2019** is considered **LATE**; a late payment charge of **1%** will apply.
- Don't let the summer heat up your bill. During the summer your A/C works longer. Set your thermostat to 78 degrees to save money. **Learn more at FPL.com/SummerIsHere.**

Please have your account number ready when contacting FPL.

Customer service:	1-800-375-2434
Outside Florida:	1-800-226-3545
To report power outages:	1-800-4OUTAGE (468-8243)
Hearing/speech impaired:	711 (Relay Service)
Online at:	**www.FPL.com**

FPL

Your electric statement

For: May 03 2019 to Jun 04 2019 (32 days)
Customer name: PASEO CDD
Service address: 8307 BIBIANA WAY # SL

Account number: 52896-15485

Statement date: Jun 04 2019
Next meter reading: Jul 03 2019

Amount of your last bill	Payments (-)	Additional activity (+ or -)	Balance before new charges (=)	New charges (+)	Total amount you owe (=)	New charges due by
347.26	347.26 CR	0.00	0.00	369.17	**$369.17**	**Jun 25 2019**

Meter reading - Meter KNJ7966

Current reading	67957
Previous reading	- 64383
kWh used	**3574**

Energy usage

	Last Year	This Year
kWh this month	6681	3574
Service days	32	32
kWh per day	208	111

***The electric service amount includes the following charges:**

Customer charge:	$10.54
Fuel:	$91.60
($0.025630 per kWh)	
Non-fuel:	$233.42
($0.065310 per kWh)	

Amount of your last bill		347.26
Payment received - Thank you		347.26 CR
Balance before new charges		$0.00
New charges (Rate: GS-1 GENERAL SVC NON-DEMAND / BUSINESS)		
Electric service amount	335.56**	
Storm charge	4.25	
Gross receipts tax	8.71	
Franchise charge	20.65	
Total new charges		$369.17

Total amount you owe **$369.17**

- Payment received after **August 26, 2019** is considered **LATE**; a late payment charge of **1%** will apply.
- Don't let the summer heat up your bill. During the summer your A/C works longer. Set your thermostat to 78 degrees to save money. **Learn more at FPL.com/SummerIsHere.**

Please have your account number ready when contacting FPL.

Customer service:	1-800-375-2434
Outside Florida:	1-800-226-3545
To report power outages:	1-800-4OUTAGE (468-8243)
Hearing/speech impaired:	711 (Relay Service)
Online at:	**www.FPL.com**

Your electric statement

For: May 03 2019 to Jun 04 2019 (32 days)
Customer name: PASEO CDD
Service address: 8307 BIBIANA WAY # FNTN

Account number: 53689-07407

Statement date: Jun 04 2019
Next meter reading: Jul 03 2019

Amount of your last bill	Payments (-)	Additional activity (+ or -)	Balance before new charges (=)	New charges (+)	Total amount you owe (=)	New charges due by
938.05	938.05 CR	0.00	0.00	969.45	**$969.45**	**Jun 25 2019**

Meter reading - Meter KN49807

Current reading	29097
Previous reading	- 17846
kWh used	**11251**
Demand reading	27.19
Demand kW	**27**

Energy usage

	Last Year	This Year
kWh this month	12365	11251
Service days	32	32
kWh per day	386	351

***The electric service amount includes the following charges:**

Customer charge:	$26.32
Fuel: *($0.025630 per kWh)*	$288.36
Non-fuel: *($0.023490 per kWh)*	$264.29
Demand: *($11.24 per kW)*	$303.48

Enroll now in FPL Budget Billing by paying $956.13 in 1 payment by the due date instead of $969.45. Your bill will be about the same each month & stabilized year-round. Learn more at FPL.com/bb

Amount of your last bill		938.05
Payment received - Thank you		938.05 CR
Balance before new charges		$0.00
New charges (Rate: GSD-1 GENERAL SERVICE DEMAND)		
Electric service amount	882.45**	
Storm charge	9.90	
Gross receipts tax	22.88	
Franchise charge	54.22	
Total new charges		$969.45

Total amount you owe **$969.45**

- Payment received after **August 26, 2019** is considered **LATE**; a late payment charge of **1%** will apply.
- Don't let the summer heat up your bill. During the summer your A/C works longer. Set your thermostat to 78 degrees to save money. **Learn more at FPL.com/SummerIsHere**.

Please have your account number ready when contacting FPL.

Customer service:	1-800-375-2434
Outside Florida:	1-800-226-3545
To report power outages:	1-800-4OUTAGE (468-8243)
Hearing/speech impaired:	711 (Relay Service)
Online at:	**www.FPL.com**

Your electric statement

For: May 03 2019 to Jun 04 2019 (32 days)
Customer name: PASEO CDD
Service address: 11060 ESTEBAN DR # SL-3

Account number: 60702-89472

Statement date: Jun 04 2019
Next meter reading: Jul 03 2019

Amount of your last bill	Payments (-)	Additional activity (+ or -)	Balance before new charges (=)	New charges (+)	Total amount you owe (=)	New charges due by
30.36	30.36 CR	0.00	0.00	31.47	**$31.47**	**Jun 25 2019**

Meter reading - Meter ACD2851

Current reading	86459
Previous reading	- 86259
kWh used	**200**

Energy usage

	Last Year	This Year
kWh this month	923	200
Service days	32	32
kWh per day	29	6

***The electric service amount includes the following charges:**

Customer charge:	$10.54
Fuel: *($0.025630 per kWh)*	$5.13
Non-fuel: *($0.065310 per kWh)*	$13.06

Amount of your last bill		30.36
Payment received - Thank you		30.36 CR
Balance before new charges		$0.00
New charges (Rate: GS-1 GENERAL SVC NON-DEMAND / BUSINESS)		
Electric service amount	28.73**	
Storm charge	0.24	
Gross receipts tax	0.74	
Franchise charge	1.76	
Total new charges		$31.47

Total amount you owe **$31.47**

- Payment received after **August 26, 2019** is considered **LATE**; a late payment charge of **1%** will apply.
- Don't let the summer heat up your bill. During the summer your A/C works longer. Set your thermostat to 78 degrees to save money. **Learn more at FPL.com/SummerIsHere.**

Please have your account number ready when contacting FPL.

Customer service:	1-800-375-2434
Outside Florida:	1-800-226-3545
To report power outages:	1-800-4OUTAGE (468-8243)
Hearing/speech impaired:	711 (Relay Service)
Online at:	**www.FPL.com**

FPL

Your electric statement

For: May 03 2019 to Jun 04 2019 (32 days)
Customer name: PASEO CDD
Service address: 8201 PENZANCE BLVD # SL

Account number: 66280-27523

Statement date: Jun 04 2019
Next meter reading: Jul 03 2019

Amount of your last bill	Payments (-)	Additional activity (+ or -)	Balance before new charges (=)	New charges (+)	Total amount you owe (=)	New charges due by
28.36	28.36 CR	7.61 CR	7.61 CR	29.08	**$21.47**	**Jun 25 2019**

Meter reading - Meter ACD8024

Current reading	60260
Previous reading	- 60084
kWh used	**176**

Energy usage

	Last Year	This Year
kWh this month	196	176
Service days	32	32
kWh per day	6	6

****The electric service amount includes the following charges:**

Customer charge:	$10.54
Fuel: *($0.025630 per kWh)*	$4.51
Non-fuel: *($0.065310 per kWh)*	$11.50

Amount of your last bill		28.36
Payment received - Thank you		28.36CR
Additional activity:		
Deposit interest		7.61CR
Balance before new charges		$7.61CR
New charges (Rate: GS-1 GENERAL SVC NON-DEMAND / BUSINESS)		
Electric service amount	26.55**	
Storm charge	0.21	
Gross receipts tax	0.69	
Franchise charge	1.63	
Total new charges		$29.08
Total amount you owe		**$21.47**

- Payment received after **August 26, 2019** is considered **LATE;** a late payment charge of **1%** will apply.
- Don't let the summer heat up your bill. During the summer your A/C works longer. Set your thermostat to 78 degrees to save money. **Learn more at FPL.com/SummerIsHere.**

Please have your account number ready when contacting FPL.

Customer service:	1-800-375-2434
Outside Florida:	1-800-226-3545
To report power outages:	1-800-4OUTAGE (468-8243)
Hearing/speech impaired:	711 (Relay Service)
Online at:	**www.FPL.com**

FPL

Your electric statement

For: May 03 2019 to Jun 04 2019 (32 days)
Customer name: PASEO CDD
Service address: 8303 ADELIO LN # LF-E

Account number: 42347-70065

Statement date: Jun 04 2019
Next meter reading: Jul 03 2019

Amount of your last bill	Payments (-)	Additional activity (+ or -)	Balance before new charges (=)	New charges (+)	Total amount you owe (=)	New charges due by
261.36	261.36 CR	0.00	0.00	277.09	**$277.09**	**Jun 25 2019**

Meter reading - Meter ACD3117

Current reading	16507
Previous reading	- 13853
kWh used	**2654**

Energy usage

	Last Year	This Year
kWh this month	2644	2654
Service days	32	32
kWh per day	83	83

****The electric service amount includes the following charges:**

Customer charge:	$10.54
Fuel:	$68.02
($0.025630 per kWh)	
Non-fuel:	$173.34
($0.065310 per kWh)	

Enroll now in FPL Budget Billing by paying $263.80 in 1 payment by the due date instead of $277.09. Your bill will be about the same each month & stabilized year-round. Learn more at FPL.com/bb

Amount of your last bill		261.36
Payment received - Thank you		261.36CR
Balance before new charges		$0.00
New charges (Rate: GS-1 GENERAL SVC NON-DEMAND / BUSINESS)		
Electric service amount	251.90**	
Storm charge	3.15	
Gross receipts tax	6.54	
Franchise charge	15.50	
Total new charges		$277.09

Total amount you owe **$277.09**

- Payment received after **August 26, 2019** is considered **LATE**; a late payment charge of **1%** will apply.
- Don't let the summer heat up your bill. During the summer your A/C works longer. Set your thermostat to 78 degrees to save money. **Learn more at FPL.com/SummerIsHere.**

Please have your account number ready when contacting FPL.

Customer service:	1-800-375-2434
Outside Florida:	1-800-226-3545
To report power outages:	1-800-4OUTAGE (468-8243)
Hearing/speech impaired:	711 (Relay Service)
Online at:	**www.FPL.com**

FPL

Your electric statement

For: May 03 2019 to Jun 04 2019 (32 days)
Customer name: PASEO CDD
Service address: 11964 TULIO WAY # SL

Account number: 66689-00456

Statement date: Jun 04 2019
Next meter reading: Jul 03 2019

Amount of your last bill	Payments (-)	Additional activity (+ or -)	Balance before new charges (=)	New charges (+)	Total amount you owe (=)	New charges due by
131.35	131.35 CR	0.00	0.00	138.45	**$138.45**	**Jun 25 2019**

Meter reading - Meter KN76524

Current reading	28772
Previous reading	- 27503
kWh used	**1269**

Energy usage

	Last Year	This Year
kWh this month	4510	1269
Service days	32	32
kWh per day	140	39

***The electric service amount includes the following charges:**

Customer charge:	$10.54
Fuel: *($0.025630 per kWh)*	$32.52
Non-fuel: *($0.065310 per kWh)*	$82.87

Amount of your last bill		131.35
Payment received - Thank you		131.35 CR
Balance before new charges		$0.00
New charges (Rate: GS-1 GENERAL SVC NON-DEMAND / BUSINESS)		
Electric service amount	125.93**	
Storm charge	1.51	
Gross receipts tax	3.27	
Franchise charge	7.74	
Total new charges		$138.45

Total amount you owe **$138.45**

- Payment received after **August 26, 2019** is considered **LATE;** a late payment charge of **1%** will apply.
- Don't let the summer heat up your bill. During the summer your A/C works longer. Set your thermostat to 78 degrees to save money. **Learn more at FPL.com/SummerIsHere.**

Please have your account number ready when contacting FPL.

Customer service:	1-800-375-2434
Outside Florida:	1-800-226-3545
To report power outages:	1-800-4OUTAGE (468-8243)
Hearing/speech impaired:	711 (Relay Service)
Online at:	**www.FPL.com**

FPL

Your electric statement

For: May 03 2019 to Jun 04 2019 (32 days)
Customer name: PASEO CDD
Service address: 8446 OLINDA WAY #IRR

Account number: 67803-16599

Statement date: Jun 04 2019
Next meter reading: Jul 03 2019

Amount of your last bill	Payments (-)	Additional activity (+ or -)	Balance before new charges (=)	New charges (+)	Total amount you owe (=)	New charges due by
12.95	12.95 CR	0.00	0.00	12.86	**$12.86**	**Jun 25 2019**

Meter reading - Meter KCD4037

Current reading	00714
Previous reading	- 00700
kWh used	**14**

Energy usage

	Last Year	This Year
kWh this month	15	14
Service days	32	32
kWh per day	0	0

***The electric service amount includes the following charges:**

Customer charge:	$10.54
Fuel: *($0.025630 per kWh)*	$0.36
Non-fuel: *($0.065310 per kWh)*	$0.92

Amount of your last bill		12.95
Payment received - Thank you		12.95 CR
Balance before new charges		$0.00
New charges (Rate: GS-1 GENERAL SVC NON-DEMAND / BUSINESS)		
Electric service amount	11.82**	
Storm charge	0.02	
Gross receipts tax	0.30	
Franchise charge	0.72	
Total new charges		$12.86

Total amount you owe **$12.86**

- Payment received after **August 26, 2019** is considered **LATE**; a late payment charge of **1%** will apply.
- Don't let the summer heat up your bill. During the summer your A/C works longer. Set your thermostat to 78 degrees to save money. **Learn more at FPL.com/SummerIsHere.**

Please have your account number ready when contacting FPL.

Customer service:	1-800-375-2434
Outside Florida:	1-800-226-3545
To report power outages:	1-800-4OUTAGE (468-8243)
Hearing/speech impaired:	711 (Relay Service)
Online at:	**www.FPL.com**

Your electric statement

For: May 03 2019 to Jun 04 2019 (32 days)
Customer name: PASEO CDD
Service address: 11442 PASEO GRANDE BLVD # SL

Account number: 73070-05293

Statement date: Jun 04 2019
Next meter reading: Jul 03 2019

Amount of your last bill	Payments (-)	Additional activity (+ or -)	Balance before new charges (=)	New charges (+)	Total amount you owe (=)	New charges due by
69.65	69.65 CR	0.00	0.00	73.31	**$73.31**	**Jun 25 2019**

Meter reading - Meter KN47176

Current reading	96888
Previous reading	- 96270
kWh used	**618**

Energy usage

	Last Year	This Year
kWh this month	1726	618
Service days	32	32
kWh per day	53	19

***The electric service amount includes the following charges:**

Customer charge:	$10.54
Fuel: *($0.025630 per kWh)*	$15.84
Non-fuel: *($0.065310 per kWh)*	$40.36

Amount of your last bill		69.65
Payment received - Thank you		69.65 CR
Balance before new charges		$0.00
New charges (Rate: GS-1 GENERAL SVC NON-DEMAND / BUSINESS)		
Electric service amount	66.74**	
Storm charge	0.74	
Gross receipts tax	1.73	
Franchise charge	4.10	
Total new charges		$73.31
Total amount you owe		**$73.31**

- Payment received after **August 26, 2019** is considered **LATE**; a late payment charge of **1%** will apply.
- Don't let the summer heat up your bill. During the summer your A/C works longer. Set your thermostat to 78 degrees to save money. **Learn more at FPL.com/SummerIsHere.**

FPL

Please have your account number ready when contacting FPL.

Customer service:	1-800-375-2434
Outside Florida:	1-800-226-3545
To report power outages:	1-800-4OUTAGE (468-8243)
Hearing/speech impaired:	711 (Relay Service)
Online at:	**www.FPL.com**

Your electric statement

For: May 03 2019 to Jun 04 2019 (32 days)
Customer name: PASEO CDD
Service address: 11047 ESTEBAN DR # FNTN

Account number: 76250-95372

Statement date: Jun 04 2019
Next meter reading: Jul 03 2019

Amount of your last bill	Payments (-)	Additional activity (+ or -)	Balance before new charges (=)	New charges (+)	Total amount you owe (=)	New charges due by
355.56	355.56 CR	0.00	0.00	376.87	**$376.87**	**Jun 25 2019**

Meter reading - Meter ACD8689

Current reading	21166
Previous reading	- 17515
kWh used	**3651**

Energy usage

	Last Year	This Year
kWh this month	3687	3651
Service days	32	32
kWh per day	115	114

****The electric service amount includes the following charges:**

Customer charge:	$10.54
Fuel: *($0.025630 per kWh)*	$93.58
Non-fuel: *($0.065310 per kWh)*	$238.44

Enroll now in FPL Budget Billing by paying $355.29 in 1 payment by the due date instead of $376.87. Your bill will be about the same each month & stabilized year-round. Learn more at FPL.com/bb

Amount of your last bill		355.56
Payment received - Thank you		355.56 CR
Balance before new charges		$0.00
New charges (Rate: GS-1 GENERAL SVC NON-DEMAND / BUSINESS)		
Electric service amount	342.56**	
Storm charge	4.34	
Gross receipts tax	8.89	
Franchise charge	21.08	
Total new charges		$376.87

Total amount you owe **$376.87**

- Payment received after **August 26, 2019** is considered **LATE**; a late payment charge of **1%** will apply.
- Don't let the summer heat up your bill. During the summer your A/C works longer. Set your thermostat to 78 degrees to save money. **Learn more at FPL.com/SummerIsHere.**

Please have your account number ready when contacting FPL.

Customer service:	1-800-375-2434
Outside Florida:	1-800-226-3545
To report power outages:	1-800-4OUTAGE (468-8243)
Hearing/speech impaired:	711 (Relay Service)
Online at:	**www.FPL.com**

Your electric statement

For: May 03 2019 to Jun 04 2019 (32 days)

Customer name: PASEO CDD

Service address: 11980 PASEO GRANDE BLVD # GRD HSE

Account number: 80522-99453

Statement date: Jun 04 2019

Next meter reading: Jul 03 2019

Amount of your last bill	Payments (-)	Additional activity (+ or -)	Balance before new charges (=)	New charges (+)	Total amount you owe (=)	New charges due by
923.03	923.03 CR	0.00	0.00	922.29	**$922.29**	**Jun 25 2019**

Meter reading - Meter KCJ5920

Current reading	10175
Previous reading	- 98893
kWh used	**11282**
Demand reading	22.80
Demand kW	**23**

Energy usage

	Last Year	This Year
kWh this month	10990	11282
Service days	32	32
kWh per day	343	352

****The electric service amount includes the following charges:**

Customer charge:	$26.32
Fuel: *($0.025630 per kWh)*	$289.16
Non-fuel: *($0.023490 per kWh)*	$265.01
Demand: *($11.24 per kW)*	$258.52

Enroll now in FPL Budget Billing by paying $913.81 in 1 payment by the due date instead of $922.29. Your bill will be about the same each month & stabilized year-round. Learn more at FPL.com/bb

Amount of your last bill		923.03
Payment received - Thank you		923.03CR
Balance before new charges		$0.00
New charges (Rate: GSD-1 GENERAL SERVICE DEMAND)		
Electric service amount	839.01**	
Storm charge	9.93	
Gross receipts tax	21.77	
Franchise charge	51.58	
Total new charges		$922.29

Total amount you owe **$922.29**

- Payment received after **August 26, 2019** is considered **LATE**; a late payment charge of **1%** will apply.
- Don't let the summer heat up your bill. During the summer your A/C works longer. Set your thermostat to 78 degrees to save money. **Learn more at FPL.com/SummerIsHere**.

Please have your account number ready when contacting FPL.

Customer service:	1-800-375-2434
Outside Florida:	1-800-226-3545
To report power outages:	1-800-4OUTAGE (468-8243)
Hearing/speech impaired:	711 (Relay Service)
Online at:	**www.FPL.com**

FPL

Your electric statement

For: May 03 2019 to Jun 04 2019 (32 days)
Customer name: PASEO CDD
Service address: 11442 PASEO GRANDE BLVD #ST LIGHTS

Account number: 83715-35140

Statement date: Jun 04 2019
Next meter reading: Jul 03 2019

Amount of your last bill	Payments (-)	Additional activity (+ or -)	Balance before new charges (=)	New charges (+)	Total amount you owe (=)	New charges due by
113.65	113.65 CR	0.00	0.00	105.85	**$105.85**	**Jun 25 2019**

Meter reading - Meter KG85059

Current reading	60892
Previous reading	- 59949
kWh used	**943**

Energy usage

	Last Year	This Year
kWh this month	2915	943
Service days	32	32
kWh per day	91	29

****The electric service amount includes the following charges:**

Customer charge:	$10.54
Fuel:	$24.17
($0.025630 per kWh)	
Non-fuel:	$61.60
($0.065310 per kWh)	

Amount of your last bill		113.65
Payment received - Thank you		113.65 CR
Balance before new charges		$0.00
New charges (Rate: GS-1 GENERAL SVC NON-DEMAND / BUSINESS)		
Electric service amount	96.31**	
Storm charge	1.12	
Gross receipts tax	2.50	
Franchise charge	5.92	
Total new charges		$105.85

Total amount you owe **$105.85**

- Payment received after **August 26, 2019** is considered **LATE**; a late payment charge of **1%** will apply.
- Don't let the summer heat up your bill. During the summer your A/C works longer. Set your thermostat to 78 degrees to save money. **Learn more at FPL.com/SummerIsHere.**

Please have your account number ready when contacting FPL.

Customer service:	1-800-375-2434
Outside Florida:	1-800-226-3545
To report power outages:	1-800-4OUTAGE (468-8243)
Hearing/speech impaired:	711 (Relay Service)
Online at:	**www.FPL.com**

FPL

Your electric statement

For: May 03 2019 to Jun 04 2019 (32 days)
Customer name: PASEO CDD
Service address: 0 PASEO DR #SIGN

Account number: 89871-07540

Statement date: Jun 04 2019
Next meter reading: Jul 03 2019

Amount of your last bill	Payments (-)	Additional activity (+ or -)	Balance before new charges (=)	New charges (+)	Total amount you owe (=)	New charges due by
67.54	67.54 CR	0.00	0.00	68.50	**$68.50**	**Jun 25 2019**

Meter reading - Meter KG85058

Current reading	17773
Previous reading	- 17203
kWh used	**570**

Energy usage

	Last Year	This Year
kWh this month	703	570
Service days	32	32
kWh per day	21	17

***The electric service amount includes the following charges:**

Customer charge:	$10.54
Fuel: *($0.025630 per kWh)*	$14.61
Non-fuel: *($0.065310 per kWh)*	$37.22

Amount of your last bill	67.54
Payment received - Thank you	67.54 CR
Balance before new charges	$0.00

New charges (Rate: GS-1 GENERAL SVC NON-DEMAND / BUSINESS)

Electric service amount	62.37**	
Storm charge	0.68	
Gross receipts tax	1.62	
Franchise charge	3.83	
Total new charges		$68.50

Total amount you owe **$68.50**

- Payment received after **August 26, 2019** is considered **LATE**; a late payment charge of **1%** will apply.
- Don't let the summer heat up your bill. During the summer your A/C works longer. Set your thermostat to 78 degrees to save money. **Learn more at FPL.com/SummerIsHere.**

Please have your account number ready when contacting FPL.

Customer service:	1-800-375-2434
Outside Florida:	1-800-226-3545
To report power outages:	1-800-4OUTAGE (468-8243)
Hearing/speech impaired:	711 (Relay Service)
Online at:	**www.FPL.com**

FPL

Your electric statement

For: May 03 2019 to Jun 04 2019 (32 days)
Customer name: PASEO CDD
Service address: 8303 ADELIO LN # LF-D

Account number: 90833-40068

Statement date: Jun 04 2019
Next meter reading: Jul 03 2019

Amount of your last bill	Payments (-)	Additional activity (+ or -)	Balance before new charges (=)	New charges (+)	Total amount you owe (=)	New charges due by
282.66	282.66 CR	0.00	0.00	299.91	**$299.91**	**Jun 25 2019**

Meter reading - Meter ACD2313

Current reading	21615
Previous reading	- 18733
kWh used	**2882**

Energy usage

	Last Year	This Year
kWh this month	2668	2882
Service days	32	32
kWh per day	83	90

****The electric service amount includes the following charges:**

Customer charge:	$10.54
Fuel:	$73.87
($0.025630 per kWh)	
Non-fuel:	$188.22
($0.065310 per kWh)	

Enroll now in FPL Budget Billing by paying $279.54 in 1 payment by the due date instead of $299.91. Your bill will be about the same each month & stabilized year-round. Learn more at FPL.com/bb

Amount of your last bill		282.66
Payment received - Thank you		282.66CR
Balance before new charges		$0.00
New charges (Rate: GS-1 GENERAL SVC NON-DEMAND / BUSINESS)		
Electric service amount	272.63**	
Storm charge	3.43	
Gross receipts tax	7.08	
Franchise charge	16.77	
Total new charges		$299.91

Total amount you owe **$299.91**

- Payment received after **August 26, 2019** is considered **LATE**; a late payment charge of **1%** will apply.
- Don't let the summer heat up your bill. During the summer your A/C works longer. Set your thermostat to 78 degrees to save money. **Learn more at FPL.com/SummerIsHere.**

Please have your account number ready when contacting FPL.

Customer service:	1-800-375-2434
Outside Florida:	1-800-226-3545
To report power outages:	1-800-4OUTAGE (468-8243)
Hearing/speech impaired:	711 (Relay Service)
Online at:	**www.FPL.com**

FPL

Your electric statement

For: May 03 2019 to Jun 04 2019 (32 days)
Customer name: PASEO CDD
Service address: 8600 FALISTO PL # PUMP

Account number: 91696-74562

Statement date: Jun 04 2019
Next meter reading: Jul 03 2019

Amount of your last bill	Payments (-)	Additional activity (+ or -)	Balance before new charges (=)	New charges (+)	Total amount you owe (=)	New charges due by
636.44	636.44 CR	3.56 CR	3.56 CR	731.47	**$727.91**	**Jun 25 2019**

Meter reading - Meter KNL2164

Current reading	82624
Previous reading	- 75979
kWh used	**6645**
Demand reading	28.46
Demand kW	**28**

Energy usage

	Last Year	This Year
kWh this month	8045	6645
Service days	32	32
kWh per day	251	207

***The electric service amount includes the following charges:**

Customer charge:	$26.32
Fuel: *($0.025630 per kWh)*	$170.31
Non-fuel: *($0.023490 per kWh)*	$156.10
Demand: *($11.24 per kW)*	$314.72

Amount of your last bill		636.44
Payment received - Thank you		636.44 CR
Additional activity:		
Deposit interest		3.56CR
Balance before new charges		$3.56CR
New charges (Rate: GSD-1 GENERAL SERVICE DEMAND)		
Electric service amount	667.45**	
Storm charge	5.85	
Gross receipts tax	17.26	
Franchise charge	40.91	
Total new charges		$731.47
Total amount you owe		**$727.91**

- Payment received after **August 26, 2019** is considered **LATE**; a late payment charge of **1%** will apply.
- Don't let the summer heat up your bill. During the summer your A/C works longer. Set your thermostat to 78 degrees to save money. **Learn more at FPL.com/SummerIsHere.**

Please have your account number ready when contacting FPL.

Customer service:	1-800-375-2434
Outside Florida:	1-800-226-3545
To report power outages:	1-800-4OUTAGE (468-8243)
Hearing/speech impaired:	711 (Relay Service)
Online at:	**www.FPL.com**

FPL

Your electric statement

For: May 03 2019 to Jun 04 2019 (32 days)
Customer name: PASEO CDD
Service address: 8305 ADELIO LN # SL-1

Account number: 92030-59473

Statement date: Jun 04 2019
Next meter reading: Jul 03 2019

Amount of your last bill	Payments (-)	Additional activity (+ or -)	Balance before new charges (=)	New charges (+)	Total amount you owe (=)	New charges due by
108.06	108.06 CR	0.00	0.00	112.84	**$112.84**	**Jun 25 2019**

Meter reading - Meter ACD3094

Current reading	56141
Previous reading	- 55128
kWh used	**1013**

Energy usage

	Last Year	This Year
kWh this month	1604	1013
Service days	32	32
kWh per day	50	32

***The electric service amount includes the following charges:**

Customer charge:	$10.54
Fuel: *($0.025630 per kWh)*	$25.96
Non-fuel: *($0.065310 per kWh)*	$66.16

Amount of your last bill	108.06
Payment received - Thank you	108.06 CR
Balance before new charges	$0.00

New charges (Rate: GS-1 GENERAL SVC NON-DEMAND / BUSINESS)

Electric service amount	102.66**	
Storm charge	1.21	
Gross receipts tax	2.66	
Franchise charge	6.31	
Total new charges		$112.84

Total amount you owe **$112.84**

- Payment received after **August 26, 2019** is considered **LATE**; a late payment charge of **1%** will apply.
- Don't let the summer heat up your bill. During the summer your A/C works longer. Set your thermostat to 78 degrees to save money. **Learn more at FPL.com/SummerIsHere.**

Please have your account number ready when contacting FPL.

Customer service:	1-800-375-2434
Outside Florida:	1-800-226-3545
To report power outages:	1-800-4OUTAGE (468-8243)
Hearing/speech impaired:	711 (Relay Service)
Online at:	**www.FPL.com**

FPL

Your electric statement

For: May 03 2019 to Jun 04 2019 (32 days)
Customer name: PASEO CDD
Service address: 11141 ESTEBAN DR # LF-B

Account number: 99853-21067

Statement date: Jun 04 2019
Next meter reading: Jul 03 2019

Amount of your last bill	Payments (-)	Additional activity (+ or -)	Balance before new charges (=)	New charges (+)	Total amount you owe (=)	New charges due by
455.89	455.89 CR	0.00	0.00	480.28	**$480.28**	**Jun 25 2019**

Meter reading - Meter ACD2849

Current reading	06034
Previous reading	- 01350
kWh used	**4684**

Energy usage

	Last Year	This Year
kWh this month	4700	4684
Service days	32	32
kWh per day	147	146

***The electric service amount includes the following charges:**

Customer charge:	$10.54
Fuel:	$120.05
($0.025630 per kWh)	
Non-fuel:	$305.91
($0.065310 per kWh)	

Enroll now in FPL Budget Billing by paying $457.56 in 1 payment by the due date instead of $480.28. Your bill will be about the same each month & stabilized year-round. Learn more at FPL.com/bb

Amount of your last bill		455.89
Payment received - Thank you		455.89 CR
Balance before new charges		$0.00
New charges (Rate: GS-1 GENERAL SVC NON-DEMAND / BUSINESS)		
Electric service amount	436.50**	
Storm charge	5.58	
Gross receipts tax	11.34	
Franchise charge	26.86	
Total new charges		$480.28

Total amount you owe **$480.28**

- Payment received after **August 26, 2019** is considered **LATE;** a late payment charge of **1%** will apply.
- Don't let the summer heat up your bill. During the summer your A/C works longer. Set your thermostat to 78 degrees to save money. **Learn more at FPL.com/SummerIsHere.**

Please have your account number ready when contacting FPL.

Customer service:	1-800-375-2434
Outside Florida:	1-800-226-3545
To report power outages:	1-800-4OUTAGE (468-8243)
Hearing/speech impaired:	711 (Relay Service)
Online at:	**www.FPL.com**

FPL

Your electric statement

For: May 03 2019 to Jun 04 2019 (32 days)
Customer name: PASEO CDD
Service address: 11197 PASEO DR #PUMP

Account number: 56759-56527

Statement date: Jun 04 2019
Next meter reading: Jul 03 2019

Amount of your last bill	Payments (-)	Additional activity (+ or -)	Balance before new charges (=)	New charges (+)	Total amount you owe (=)	New charges due by
19.14	19.14 CR	0.00	0.00	19.66	**$19.66**	**Jun 25 2019**

Meter reading - Meter KG86071

Current reading	02326
Previous reading	- 02244
kWh used	**82**

Energy usage

	Last Year	This Year
kWh this month	86	82
Service days	32	32
kWh per day	2	2

***The electric service amount includes the following charges:**

Customer charge:	$10.54
Fuel: *($0.025630 per kWh)*	$2.10
Non-fuel: *($0.065310 per kWh)*	$5.36

Amount of your last bill		19.14
Payment received - Thank you		19.14 CR
Balance before new charges		$0.00
New charges (Rate: GS-1 GENERAL SVC NON-DEMAND / BUSINESS)		
Electric service amount	18.00**	
Storm charge	0.10	
Gross receipts tax	0.46	
Franchise charge	1.10	
Total new charges		$19.66
Total amount you owe		**$19.66**

- Payment received after **August 26, 2019** is considered **LATE**; a late payment charge of **1%** will apply.
- Don't let the summer heat up your bill. During the summer your A/C works longer. Set your thermostat to 78 degrees to save money. **Learn more at FPL.com/SummerIsHere.**

Please have your account number ready when contacting FPL.

Customer service:	1-800-375-2434
Outside Florida:	1-800-226-3545
To report power outages:	1-800-4OUTAGE (468-8243)
Hearing/speech impaired:	711 (Relay Service)
Online at:	**www.FPL.com**

FPL

HomeTeam Pest Defense, Inc.
5570 Lee Street
Suite 12
Lehigh Acres, FL 33971-1566
239-561-1300

Invoice and detailed service report

INVOICE #: 63666230

WORK DATE: 6/14/19

RECEIVED
JUN 17 2019

BILL-TO **1842113**

Paseo CDD
Paseo Community Development District
3434 Colwell Ave
Suite 200
Tampa, FL 33614-8390

Phone: 239-261-9232 xkari

LOCATION **1842113**

Paseo CDD
Paseo Gatehouse
11980 Paseo Grande Blvd
Fort Myers, FL 33912-9010

Phone: 239-261-9232 xkari

Time In: 6/14/19 11:50 AM
Time Out: 6/14/19 12:20 PM
Customer Signature

Customer Unavailable to Sign
Technician Signature

Jameka Johnson
License #:

Purchase Order	Terms	Service Description	Quantity	Unit Price	Amount
None	DUE UPON RECEIPT	HOA Conventional Pest Control Service	1.00	30.00	30.00

Subtotal	30.00
Tax	0.00
Total	30.00
Total Due:	**30.00**

Today's Service Comments

Hi Paseo Gatehouse,

Today's 6-Point Advantage Service:

1. Inspected the exterior of your home to identify potential pest problems
2. Removed and treated cobwebs and wasps nests within reach
3. Provided conventional pest control applications
4. Treated pest entry points around doors and windows
5. Applied pest control materials around the outside perimeter of your home.
6. Provided this detailed service report.

Today's Service Comments: Today I found and treated acrobat ants, spiders, millipedes and centipedes around the exterior perimeter. I also treated interior for general household pests. Today's treatment will help reduce future activity. Thank you and have a blessed day (:
Jameka Johnson

Spoke with Gatehouse security

Thank you for choosing HomeTeam Pest Defense as your service provider.
Your next scheduled service month will be in September.

Date Rec'd Rizzetta & Co, Inc_____

D/M approval Belinda Blandon Date 6/21/19

Date entered JUN 20 2019

Fund 001 GL 52900 OC 4100

Check #_____

PRODUCTS APPLICATION SUMMARY

Material	Lot #	EPA #	A.I. %	A.I. Conc.	Active Ingredient	Finished Qty	Undiluted Qty
Demand G		100-1240	0.0450%	n/a	Lambda-cyhalothrin	1.0000 Pound	1.0000 Pound
Target Pests: Acrobat Ant, Ants, Centipede, Millipede, Spiders							

Material	Lot #	EPA #	A.I. %	A.I. Conc.	Active Ingredient	Finished Qty	Undiluted Qty
Suspend Polyzone		432-1514	4.7500%	0.0300	Deltamethrin	1.0000 Gallon	
Target Pests: Acrobat Ant, Ants, Centipede, Millipede, Spiders							

Treated Area(s) - Do not allow unprotected persons, children or pets to touch, enter or replace items or bedding, to contact or enter treated area(s) until dry. Ventilation/Reoccupying - Vacate and keep area(s) closed up to 30 minutes after treatment, then ventilate area(s) for up to 2 hours before reoccupying. Equipment/Processing/Food - Thoroughly wash dishes, utensils, food preparation/processing equipment and surfaces with an effective cleaning compound and rinse with clean water if not removed or covered during a treatment. This area should be odor free before food products are placed in the area. Exterior Applications (Baits) - Do not allow grazing or feed, lawn or sod clippings to livestock after bait applications. Do not burn treated fire wood for one month after treatment. Granular Application(s) Do not water to the point of run-off.

HomeTeam Pest Defense, Inc.
5570 Lee Street
Suite 12
Lehigh Acres, FL 33971-1566
239-561-1300

Invoice and detailed service report

INVOICE #: 63666230

WORK DATE: 6/14/19

PRODUCTS APPLIED

Material EPA #	A.I. % A.I. Concentration	Finished Qty Undiluted Qty	Application Equipment Application Method	Sq/Cu/L Ft	Time Lot #
Demand G	0.0450%	1.0000 Pound	Spreader		12:17:13 PM
100-1240	n/a	1.0000 Pound	Broadcast		
Target Pests:	Acrobat Ant, Ants, Centipede, Millipede, Spiders				
Comment:	Areas = Exterior Perimeter and Mulch Beds				
Weather:	0°, 0 MPH				
Suspend Polyzone	4.7500%	1.0000 Gallon	Backpack Compressed Sprayer		12:17:55 PM
432-1514	0.03000000		Backpack compression sprayer		
Target Pests:	Acrobat Ant, Ants, Centipede, Millipede, Spiders				
Comment:	Areas = Exterior Perimeter, Entry Points & Mulch Beds				
Weather:	0°, 0 MPH				

GENERAL COMMENTS / INSTRUCTIONS

If this ticket shows a previous balance due which has been paid, please disregard & accept our thanks for your payment. If you have questions about your service or invoice, please call us at (239)561-1300. ***Now Hiring*** Call us for Career Opportunities in Sales & Service. Pay online at www.pestdefense.com

Treated Area(s) - Do not allow unprotected persons, children or pets to touch, enter or replace items or bedding, to contact or enter treated area(s) until dry. Ventilation/Reoccupying - Vacate and keep area(s) closed up to 30 minutes after treatment, then ventilate area(s) for up to 2 hours before reoccupying. Equipment/Processing/Food - Thoroughly wash dishes, utensils, food preparation/processing equipment and surfaces with an effective cleaning compound and rinse with clean water if not removed or covered during a treatment. This area should be odor free before food products are placed in the area. Exterior Applications (Baits) - Do not allow grazing or feed, lawn or sod clippings to livestock after bait applications. Do not burn treated fire wood for one month after treatment. Granular Application(s) Do not water to the point of run-off.

Johnson Engineering, Inc.
Remit To:
P.O. Box 2112
Fort Myers, FL 33902
Ph: 239.334.0046 Fax: 239.334.3661

Invoice

May 24, 2019
Project No: 20097877-018
Invoice No: 11

Project Manager Timothy Denison

FEID #59-1173834

Date Rec'd Rizzetta & Co., Inc. MAY 29 2019
D/M approval Belinda Blandon Date 5/30/19
Date entered MAY 30 2019
Fund 001 GL 53800 OC 4608
Check#

Accounts Payable
Paseo CDD
c/o Rizzetta & Company, Inc.
9428 Camden Field Parkway
Riverview, FL 33569

Project 20097877-018 Paseo WUP Compliance Monitoring 2018
20097877-018
Paseo WUP Compliance Monitoring 2018
Professional Services through May 12, 2019

PROFESSIONAL SERVICES

Phase No.	Phase Description	Contract Amount	Fee Type	%	Total Inv To-Date	Previously Invoiced	Current Inv Amount	Balance to Complete
01	Water Level and Pumpage Monitoring	4,800.00	LS	90 %	4,320.00	3,792.00	528.00	480.00
02	Surface Water Quality Sampling	4,800.00	LS	100 %	4,800.00	4,800.00	0.00	0.00
03	Six Mile Cypress Slough Data Evaluation	2,950.00	LS	90 %	2,655.00	2,212.50	442.50	295.00
04	Surface Water Quality Reporting	3,490.00	LS	0 %	0.00	0.00	0.00	3,490.00
05	Surface Water Quality Lab Analysis	2,100.00	LS	100 %	2,100.00	1,880.00	220.00	0.00
06	Esperanza Pumpage Monitoring & Reporting	2,400.00	LS	90 %	2,160.00	1,800.00	360.00	240.00
REIM	Reimbursable Expenses	500.00	T&M	90 %	450.00	450.00	0.00	50.00
	Totals	21,040.00			16,485.00	14,934.50	1,550.50	4,555.00

SUB-TOTAL PROFESSIONAL SERVICES: **1,550.50**

INVOICE TOTAL: **1,550.50**

Outstanding Invoices

Number	Date	0 - 30	31 - 60	61 - 90	91 - 120	121 +	Balance
10	4/29/2019	1,337.50	0.00	0.00	0.00	0.00	1,337.50
	Total	1,337.50	0.00	0.00	0.00	0.00	1,337.50

PASSARELLA & ASSOCIATES INC
Consulting Ecologists

13620 Metropolis Avenue
Suite 200
Fort Myers, FL 33912
239-274-0067

JUN 12 2019

In Account With

Paseo CDD
c/o Rizzetta & Company, Inc.
9530 Marketplace Road, Suite 206
Fort Myers, FL 33912

Paseo CDD - GIS Services

Project #19PCD3028 (Invoice 3) June 12, 2019

For GIS Services for the Paseo CDD project located in Lee County, Florida per Professional Services Agreement dated March 18, 2019.

Professional services through May 31,2019

Description	Contract Amount	Percent Complete	Prior Billed	Total Billed	Current Billed
1.0 GIS Services - PCDD GIS Web Application	15,000.00	101	13,475.00	15,190.00	1,715.00
99.0 Reimbursables	0.00	0	0.00	0.00	0.00
Total	15,000.00		13,475.00	15,190.00	1,715.00

Professional Services Due This Invoice: 1,715.00

Task 1.0 GIS Services - PCDD GIS Web Application

	Hours	Rate	Billed Amount
GIS Analyst III			
05/01/2019 Data compilation; GIS analysis	7.00	120.00	840.00
GIS Manager			
05/01/2019 Data compilation; GIS web application	1.75	140.00	245.00
05/02/2019 Data compilation; GIS web application	3.00	140.00	420.00
05/03/2019 Data compilation; GIS web application	1.50	140.00	210.00
		Task subtotal	1,715.00

Date Rec'd Rizzetta & Co, Inc.

D/M approval Belinda Blandon Date 6/14/19

Date entered JUN 14 2019

Fund 001 GL 53800 OC 4607

Check #

Paseo CDD
SunTrust Debit Card Account #xxxxxxxx8181 Balance $3,000
6/6/2019

Date	Vendor	Description	GL Code	Amount	Balance	Cleared	Receipt
					3,000.00		
12/04/18	Bob Dean Supply	Stormwater Repair	001-53800-4598	(1,699.70)	1,300.30	Y	Y
12/17/18	Staples	Facility Supplies	001-52900-4699	(211.12)	1,089.18	Y	Y
12/17/18	Publix	Water	001-52900-4699	(5.56)	1,083.62	Y	Y
01/23/19	Home Depot	Maintenance Supplies	001-52900-4699	(54.22)	1,029.40	Y	Y
02/20/19	Staples	Toner & Office Supplies	001-52900-4736	(123.17)	906.23	Y	Y
03/05/19	Home Depot	Plywood	001-57200-4654	(388.71)	517.52	Y	Y
03/08/19	Gator Golf Carts	Gof Cart Battery	001-57900-6424	(936.50)	(418.98)	Y	Y
03/18/19	City Of Ft. Meyer	Meter Installation	001-52900-4700	(17.50)	(436.48)	Y	Y
03/18/19	Home Depot	Drill	001-52900-4700	(10.93)	(447.41)	Y	Y
03/20/19	Signs by Tomorrow	Sign	001-52900-4699	(137.41)	(584.82)	Y	Y
04/17/19	Home Depot	Light Bulbs	001-57200-4654	(15.42)	(600.24)	Y	Y
05/08/19	Staples	Black Tooer	001-57200-4736	(169.98)	(770.22)	Y	Y
05/20/19	Staples	Wall Mounted Mail Box	001-52900-4699	(91.79)	(862.01)	Y	Y
5/23/19	Home Depot	Weed Killer& Sealant	001-57200-4654	(72.99)	(935.00)	Y	Y
		Total debit card expenses		(3,935.00)			
		Less Credit Refund to Account	**8/1/2018**	78.77			
		Less Credit Refund to Account	**12/4/2018**	1,801.68			
	SunTrust	Replenish Balance to $3,000.00		**2,054.55**			
		001-10104					

Belinda Blandon 6/6/19

District Manager Date

Paseo CDD
Petty Cash/Debit Card Reimbursement
12/04/18-05/23/2019

Date	Payee	Amount	Description
12/04/18	Bob Dean Supply	$ 1,699.70	Stormwater Repair
12/17/18	Staples	$ 211.12	Facility Supplies
12/17/18	Publix	$ 5.56	Water
01/23/19	Home Depot	$ 54.22	Maintenance Supplies
02/20/19	Staples	$ 123.17	Toner & Office Supplies
03/05/19	Home Depot	$ 388.71	Plywood
03/08/19	Gator Golf Carts	$ 936.50	Gof Cart Battery
03/18/19	City Of Ft. Meyer	$ 17.50	Meter Installation
03/18/19	Home Depot	$ 10.93	Drill
03/20/19	Signs by Tomorrow	$ 137.41	Sign
04/17/19	Home Depot	$ 15.42	Light Bulbs
05/08/19	Staples	$ 169.98	Black Toner
05/20/19	Staples	$ 91.79	Wall Mounted Mail Box
05/23/19	Home Depot	$ 72.99	Weed Killer& Sealant
		$ 3,935.00	**Total**

Receipts Attached.

Bob Dean Supply, Inc.

www.bobdeansupply.com

MAIN OFFICE
2624 HANSON STREET
FT. MYERS, FLORIDA 33901
(239) 332-1131
D - U - N - S: 03-229-6933

GLADES BRANCH
1310 EVERCANE ROAD
CLEWISTON, FLORIDA 33440
(863) 983-6131

INVOICE

STEEL QUOTES VALID 24 HOURS DUE TO MARKET

REMIT TO: 2624 HANSON STREET
FORT MYERS, FLORIDA 33901-7488

Credit Card
XXXXXXXXXXXXXX4202

SOLD TO
PUMP AND MOTOR SHOP SALES
MICHAEL LAKE-PASEO
239-333-7353
***** DO NOT MAIL *****
FORT MYERS

SHIP TO
COLLIER WATER SYSTEMS, INC.
1430 RAIL HEAD BLVD
SUITE 108
NAPLESO D *** 34
239-728-1166

INVOICE NO. 1708715

INVOICE DATE 11/05/18
8:22:07

PAGE 1

CUSTOMER NO.	CUST. P.O. NO.	OUR ORDER NO.	SLSM.	ENTRY DATE	AS OF
898008	JOSH	R9791/00	87	10/23/18	

Due Date: 12/05/18

ORIGINAL INVOICE

TERMS: CASH SALES

SHIPPED VIA: CPU GD

SPECIAL INSTRUCTIONS: ***** C O D *****

QUANTITY ORDERED	QUANTITY SHIPPED	B.O.	ITEM NUMBER	DESCRIPTION	LIST PRICE	UNIT PRICE		AMOUNT
30	30		Q7778	COPPER WIRE INVERTER DUTY	11.35	11.35	LB	340.50
1	1		Q7777	MOTOR SHOP MATERIAL	40.00	40.00	EA	40.00
9	9		Q6666	MOTOR SHOP LABOR	100.00	100.00	EA	900.00
1	1		L7586	BERKELEY S18869 SHAFT SLEEVE 1-3/8ID X 1-3/4OD 416SS	149.00	119.20	EA	119.20
1	1		L7585	BERKELEY S32015 MECH SHAFT SEAL	375.00	300.00	EA	300.00
				REWIND 30HP MOTOR ON BERKELEY P UMP				

CASH DISCOUNT:
11/05/18
IF PAYMENT IS MADE WITHIN OUR TERMS
(DEDUCT

INVOICES UNPAID AFTER 30 DAYS SUBJECT TO 1½% LATE CHARGE. BOB DEAN SUPPLY RESERVES THE RIGHT TO TITLE AND POSSESSION TO ALL ITEMS INVOICED UNTIL PAYMENT IS RECEIVED IN FULL.

RECEIVED BY: _____

NET MERCHANDISE TOTAL	1,699.70
SPECIAL CHARGE	
TAX	101.98
INVOICE TOTAL	$1,801.68

PARKWAY PRINTING, INC. • (239) 936-6970

Thank you for your order, Attn

Print Order | Cancel

A confirmation email will be sent to you at khardwick@rizzetta.com with your complete order details.

Order Number: 9794532343

Placed on: December 13, 2018

212.92
- 1.80
$211.12

Shipping address

Paseo Community Development District
Guard House
11980 Paseo Grande Blvd
Fort Myers, FL 33912

Order sub-total:	$212.92
Coupons:	-$1.80
Shipping:	FREE
Estimated Tax:	$12.67
Total:	**$223.79**

Payment methods

Master Card ending in 9480
Attn Accounting, Riverview, FL 33578

Need to cancel this order? Note: Most orders can be cancelled within **30 minutes.**

Hide Order details

Expected delivery by December 14, 2018 11980 Paseo Grande Blvd, Fort Myers, FL

Canon (3484B001) Black Toner Cartridge	Qty.2	**$164.98**
3" Simply™ View Binder with Round Rings, White	Qty.6	**$46.14** ~~$47.94~~

YOU MAY ALSO LIKE

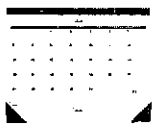

2019 Staples 17" x 22" Desk Pad Calendar, Black/White (12951-19-CC)

(43)

$4.99 ~~$5.99~~

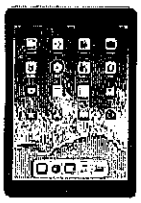

NEW Apple 9.7" iPad with Wi-Fi, 32GB, Space Gray (6th Gen)

(49)

$289.00 ~~$329.00~~

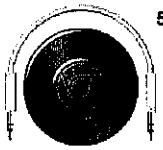

57% OFF

Google Chromecast Audio

(40)

$15.00 ~~$35.00~~

HammerMill® Copy Plus Copy Paper, 8.5" x 11", 5-Ream Case

(104)

$24.99 ~~$34.49~~

Publix

The Shoppes at Fiddlestick
15000 Fiddlesticks Blvd
Fort Myers, FL 33912

239-768-1710

ZEPHYR DISTILL WTR
4 @ 1.39 5.56 F

Order Total		5.56
Sales Tax		0.00
Grand Total		5.56
Debit	Payment	5.56
Change		0.00

PRESTO!
Trace #: 064421
Reference #: 1319490196
Acct #: XXXXXXXXXXXX4202
Debit Purchase FROM CHECKING
Amount: $5.56

DEBIT CARD	PURCHASE
A0000000042203	Debit
Entry Method:	Chip Read
Mode:	Issuer-PIN Verified

Your cashier was Patrick

12/17/2018 11:10 S0864 R106 5299 C0154

Explore the many ways to save at Publix.
View bargains at publix.com/savingstyle

Publix Super Markets, Inc.

More saving.
More doing.

14655 S. TAMIAMI TR. (NOW HIRING)
FT. MYERS, FL 33912 (239)437-6333

0276 00007 89990 01/23/19 09:20 AM
CASHIER JUAN

034139640011 15" PRYBAR <A> 9.97
ESTWING 15"FORGED HALF RND HANDY BAR
076174552935 40IN PRY BAR <A> 29.97
DEWALT 40IN MULTI FUNCTIONAL BAR
1000-300-224 CLAW HAMMER <A> 10.97
HUSKY 16OZ SMTH FACE FGL CLAW HMR

SUBTOTAL	50.91
SALES TAX	3.31
TOTAL	$54.22
XXXXXXXXXXXX4202 DEBIT	
	USD$ 54.22

AUTH CODE 170510
AID A0000000042203 Debit

0276 07 89990 01/23/2019 1233

RETURN POLICY DEFINITIONS

	POLICY ID	DAYS	POLICY EXPIRES ON
A	1	90	04/23/2019

****
DID WE NAIL IT?

Take a short survey for a chance TO WIN
A $5,000 HOME DEPOT GIFT CARD

(Opine en español)

www.homedepot.com/survey

User ID: H88-180545 180276
PASSWORD: 19073 180269

Entries must be completed within 14 days of purchase. Entrants must be 18 or older to enter. See complete rules on website. No purchase necessary.

Thank you for your order, Attn

Print Order | Cancel

A confirmation email will be sent to you at khardwick@rizzetta.com with your complete order details.

Order Number: 9796871567

Placed on: February 18, 2019

Shipping address

Paseo Community Development District
Guard House
11980 Paseo Grande Blvd
Fort Myers, FL 33912

Payment methods

Master Card ending in 9480
Attn Accounting, Riverview, FL 33578

Order sub-total:	$134.17
Coupons:	-$11.00
Shipping:	FREE
Estimated Tax:	$8.01
Total:	**$131.18**

Need to cancel this order? Note: Most orders can be cancelled within **30 minutes**.

Hide Order details

Staples Plus members always save more!

Free Next-Day Delivery -- No minimum

$25.99 paper everyday

Guaranteed lowest price on your 5 favorites

VIEW ALL BENEFITS

Membership fee required. Exclusions apply.

Expected delivery by February 19, 2019 11980 Paseo Grande Blvd, Fort Myers, FL

Canon 125 Black Toner Cartridge, Standard (3484B001AA)	Qty.1	**$84.99**
Staples Wired Keyboard, Black (51433)	Qty.1	**$10.09** ~~$13.69~~
Scotch Transparent Tape with C60 Desktop Dispenser, Engineered for Office and Home Use, Glossy, 3/4" x 27.77 yds., 12 Rolls	Qty.1	**$28.09** ~~$35.49~~

84.99
10.09
28.09
123.17

YOU MAY ALSO LIKE

More saving.
More doing.℠

3402 FORUM BLVD. FT. MYERS,FL 33905
(239)278-5201

8444 00039 64178 03/05/19 10:32 AM
CASHIER MARITE

887480012323 8X11/2SLDRTK <A> 10.26
#8X1-1/2" HEX HD SMS SELF DRILLING
ORDER ID: H8444-147198
RECALL AMOUNT 360.76

SUBTOTAL 371.02
SALES TAX 17.69
TOTAL $388.71
XXXXXXXXXXXX4202 DEBIT
USD$ 388.71
AUTH CODE 462305
AID A0000000042203 Debit

8444 39 64178 03/05/2019 3077

RETURN POLICY DEFINITIONS

	POLICY ID	DAYS	POLICY EXPIRES ON
A	1	9D	06/03/2019

****
DID WE NAIL IT?

Take a short survey for a chance TO WIN
A $5,000 HOME DEPOT GIFT CARD

Opine en español

www.homedepot.com/survey

User ID: BX7J 137089 128684
PASSWORD: 19155 128645

Entries must be completed within 14 days of purchase. Entrants must be 18 or older to enter. See complete rules on website. No purchase necessary.

SPECIAL SERVICES CUSTOMER INVOICE

Store 8444 FT MYERS EAST
3402 FORUM BLVD
FORT MYERS, FL 33905

Phone: (239) 278-5201
Salesperson: MXV4118
Reviewer:

 No. H8444-147198

VALIDATION AREA

SALE 72 MXV4118 10:32 AM 19

ORDER ID: H8444-147198

RECALL	AMOUNT	360.76
ADDL MDSE	SUBTOTAL	10.26
	SUBTOTAL	371.02
	SALES TAX	17.69
	TOTAL	$388.71
XXXXXXXXXXXX4202	DEBIT	
		USD$ 388.71

AUTH CODE 462305
AID A0000000042203 Debit

This is only a QUOTE for the merchandise and services printed below. This becomes an Agreement upon payment and an endorsement by a Home Depot register validation.

SOLD TO

Name	LAKE MICHAEL	Phone 1	(239) 333-7353
Address	2743 1ST ST	Phone 2	
		Company Name	
City	FORT MYERS	Job Description	mainance building
State	FL	Zip 33916	County LEE

QUOTE is valid for this date: 03/05/2019

HOME DEPOT DELIVERY #1

MERCHANDISE AND SERVICE SUMMARY

We reserve the right to limit the quantities of merchandise sold to customers

REF # V03

STOCK MERCHANDISE TO BE DELIVERED:

REF #	SKU	QTY	UM	DESCRIPTION	PL	TAX	PRICE EACH	EXTENSION
R01	0000-166-073	11.00	EA	15/32 4X8 RTD PLYWOOD (3-PLY) /	A	Y	$20.05	$220.55
R02	0000-161-640	13.00	EA	2X4-96" PRIME KD WHITEWOOD STUD /	A	Y	$3.17	$41.21
							MERCHANDISE TOTAL:	**$261.76**
DELIVERY INFORMATION:				SCHEDULED DELIVERY DATE: 03/13/2019	SCHEDULED DELIVERY TIME: 10AM-2PM			
V03	0000-515-663	1.00		Outside Delivery		N	$99.00	$99.00
							DELIVERY SERVICE SUBTOTAL:	**$99.00**

THE PCC WILL DELIVER MDSE TO: LAKE, MICHAEL

ADDRESS: 11604 paseo grande blvd **CITY:** FORT MYERS

STATE: FL **ZIP:** 33912 **COUNTY:** LEE **SALES TAX RATE:** 6.500

PHONE: (239) 333-7353 **ALTERNATE PHONE:** (239) 333-7353

*** CONTINUED ON NEXT PAGE ***

NOT VALID FOR MERCHANDISE CARRY-OUT

Check your current order status online at
www.homedepot.com/orderstatus

(9801) 0100716453

HOME DEPOT DELIVERY #1
(Continued)

REF #V03

MDSE & DELIVERY TOTALS:	$360.76

DRIVER SPECIAL INSTRUCTIONS: please call the customer 30 min before arriving

END OF HOME DEPOT DELIVERY - REF #V03

TOTAL CHARGES OF ALL MERCHANDISE & SERVICES

Policy Id (PI):
A: 90 DAYS DEFAULT POLICY;

'The Home Depot reserves the right to limit / deny returns. Please see the return policy sign in stores for details.'

ORDER TOTAL	$360.76
SALES TAX	$17.02
TOTAL	$377.78
BALANCE DUE	$377.78

END OF ORDER No. H8444-147198

GATOR GOLF CARS
STREET LEGAL, MULTI-PASSANGER & UTILITY VEHICLES

Serving SWFL Marketplace
Phone: 239.334.4000
Remit To Address:
14580 Global Pkwy, Unit 110,
Ft Myers, FL 33913

admin@gatorgolfcars.com
www.GatorGolfCars.com

SERVICE INVOICE

Invoice: 01-38109
Date: 3/6/2019

PO:
CustId: PASEO COMMUNITY

Cust Email: BBLANDON@RIZZETTA.COM
Phone: (239) 940-3971
Salesperson: Jessica
User: Jessica

Bill To:
PASEO COMMUNITY DEVELOPMENT DISTRICT
11980 PASEO GRANDE BLVD
FORT MYERS , FL 33912

Ship To:
PASEO COMMUNITY DEVELOPMENT DISTRICT

Card Name:
Account: **********4202 / MC - Entry Method: Keyed
AID: - ARC: - TSI:
TVR: - IAD:
Batch: - Approval: 003523 /
Verification Method:

Cc phone
001-57900-6424

Total Forms of Payment: $936.50

Balance Due On This Invoice: $0.00

Thank You for your Business

GATOR GOLF CARS

STREET LEGAL, MULTI-PASSENGER & UTILITY VEHICLES

Serving SWFL Marketplace

Phone: 239.334.4000

Remit To Address:
14580 Global Pkwy, Unit 110,
Ft Myers, FL 33913

admin@gatorgolfcars.com
www.GatorGolfCars.com

SERVICE INVOICE

Invoice: 01-38109
Date: 3/6/2019

PO:
CustId: PASEO COMMUNITY

Cust Email: BBLANDON@RIZZETTA.COM
Phone: (239) 940-3971
Salesperson: Jessica
User: Jessica

Bill To:
PASEO COMMUNITY DEVELOPMENT DISTRICT
11980 PASEO GRANDE BLVD
FORT MYERS , FL 33912

Ship To:
PASEO COMMUNITY DEVELOPMENT DISTRICT

TECH CHECKED OVER UNIT AND FOUND BATTERIES HAVE NO WATER,,, ADDED WATER AND WILL TRY TO BRING BACK, CALLED MIKE (L/M) 1:15 MIKE CALLED 3-5-11:30 .
EST=936.50 MIKE OKED

TECH INSTALLED NEW BATTERIES AND PLACED UNIT ON CHARGE,

Opened:	3/6/2019	Responsible Tech:	Shuff
Work Order No:	01-41724	My Ref:	PASEO COMMUNITY
Pickup Date:		Delivery Date:	
Unit No:	13001	Unit Make:	Club Car
Unit Serial:	MF1810854259	Unit Model:	CLUBCAR CARRYALL300
Unit Desc:	2018 CLUBCAR CARRYALL 300	Unit Tag:	

ANNUAL, CK BATTERIES, BUCKING AFTER DRIVING 15MIN

Item	Type	Description	Qty	Tax	Price	Discount	Net Price
SERVICE							
		SERVICE					
Shop Supplies	MC	Shop Supplies Fee	1.0000		$30.00		$30.00
GC-8V	PA	ELE - 8VOLT GOLF CART BATTERY	6.0000		$110.00		$660.00
BATTERY	MC	BATTERY FEE	6.0000		$1.50		$9.00
Pickup/Del	MC	PICKUP/DEL	1.0000		$95.00		$95.00
						Segment Total:	$794.00

Labor:	Hours: 1.5000	$142.50
Parts:		$660.00
Misc Charges:		$134.00

Totals

Sub Total:	$936.50
Total Tax:	$0.00
Invoice Total:	$936.50

Forms of Payment

Type	Description	Amount
CIP Credit Card	PASEO COMMUNITY	$936.50

City of Palms

CITY OF FT. MYERS
Community Development Department
1825 Hendry Street, Suite 101
Ft Myers, FL 33901
239-321-7900 Main Number

3/18/2019
11:42:35AM

Receipt #: ST201900000000010629

Date: 03/15/2019

Line Items:

Case No	Tran Code	Description	Revenue Account No	Amount Paid
BLD2017-02734			425-1215-322-0010	17.50
			Line Item Total:	**$17.50**

METER INSTALLATION: Copy of this receipt must be presented to Utilities Dvision at 2925 Dr. Martin Luther King Blvd.

Utility Information

Address	Water Meter Size	Use (ENG)

Permit #: *# of Units:*

Payments:

Method	Payer	Bank No	Account No	Confirm No	How Received	Amount Paid
CreditCard				003232	MC	17.50
					Payment Total:	**$17.50**

As of October 1, 2018 building permit fees have been reduced by 50 %

cReceiptCityPrompt.rpt

More saving.
More doing.™

3402 FORUM BLVD. FT. MYERS,FL 33905
(239)278-5201

8444 00007 96102 03/17/19 10:35 AM
SELF CHECK OUT

887480012323 8X11/2SLDRTK <A> 10.26
#8X1-1/2" HEX HD SMS SELF DRILLING

SUBTOTAL	10.26
SALES TAX	0.67
TOTAL	$10.93
XXXXXXXXXXXX4202 DEBIT	
	USD$ 10.93

AUTH CODE 130443
AID A0000000042203 Debit

8444 07 96102 03/17/2019 1596

RETURN POLICY DEFINITIONS

	POLICY ID	DAYS	POLICY EXPIRES ON
A	1	90	06/15/2019

****
DID WE NAIL IT?

Take a short survey for a chance TO WIN
A $5,000 HOME DEPOT GIFT CARD

Opine en español

www.homedepot.com/survey

User ID: H88 200937 192500
PASSWORD: 19167 192493

Entries must be completed within 14 days of purchase. Entrants must be 18 or older to enter. See complete rules on website. No purchase necessary.

SIGNS BY TOMORROW
SIGNS & GRAPHICS NATIONWIDE

12700 Metro Parkway - Suite 3
Fort Myers, FL 33966

INVOICE

Phone: (239) 561-7446
Fax: (239) 561-7447

Invoice Number
57956

Bill To:

Paseo Community Development District
Fort Myers, FL

Contact Name: Michael Lake
Phone: (239) 333-7353
Fax:
Email: mlake@rizzetta.com
PO Number:
Order Date: 3/19/2019
Salesperson: Katie Bucel

Overall Description: Paseo Com

	Product Description	Font	Color	Qty	Sides	Height	Width	Unit Price	Install	Total
1	Aluminum - .080"		Black & Red on	1	1	24	18	$109.02	$0.00	$109.02

Aluminum Sign with reflective vinyl graphics.
Text:
CAUTION
GATE
CLOSES
AFTER EACH
VEHICLE

2	Set-up charge			1	1	1	1	$20.00	$0.00	$20.00

he first design plus 2 revisions, anything
o additional design fees.

SIGNS BY TOMORROW
12700 METRO PARKWAY
FORT MYERS, FL. 33966
239-561-7446

SALE

REF#: 00000001
Batch #: 849
03/19/19 11:00:25
APPR CODE: 004529
Trace: 1
MASTERCARD Chip
**********4202 **/**

AMOUNT **$137.41**

f order. A 1.5% service charge will be
/s old.

APPROVED

Debit MasterCard
AID: A0000000041010
TVR: 00 00 08 80 00
TSI: E8 00

ignature)

THANK YOU

CUSTOMER COPY

Line Item Total:	**$129.02**
Subtotal:	**$129.02**
Taxes:	**$8.39**
Total:	**$137.41**
Total Payments:	**$137.41**
Balance Due:	**$0.00**

Payments Received (thank you)

Date	Amount	Payment Method
3/19/2019 11:00:00AM	$137.41	MasterCard
Total Payments	$137.41	
	$0.00	

nay E-mail us at **fortmyers@signsbytomorrow.com**
us on the web at **signsbytomorrow.com/fortmyers**

More saving.
More doing.℠

14655 S. TAMIAMI TR. (NOW HIRING)
FT. MYERS, FL 33912 (239)437-6333

0276 00002 67971 04/17/19 10:15 AM
CASHIER CATHYRINE

764661160601 60AWBLACK <A> 14.47
60LB SAKRETE ALL WEATHER BLKTP PATCH

SUBTOTAL	14.47
SALES TAX	0.95
TOTAL	$15.42
XXXXXXXXXXXX4202 DEBIT	
	USD$ 15.42

AUTH CODE 770087
AID A0000000042203 Debit

0276 02 67971 04/17/2019 6173

RETURN POLICY DEFINITIONS

	POLICY ID	DAYS	POLICY EXPIRES ON
A	1	90	07/16/2019

****
DID WE NAIL IT?

Take a short survey for a chance TO WIN
A $5,000 HOME DEPOT GIFT CARD

Opine en español

www.homedepot.com/survey

User ID: HTH 136507 136233
PASSWORD: 19217 136231

Entries must be completed within 14 days of purchase. Entrants must be 18 or older to enter. See complete rules on website. No purchase necessary.

Thank you for your order, Attn

Print Order | Cancel

A confirmation email will be sent to you at khardwick@rizzetta.com with your complete order details.

Order Number: 9799338066

Placed on: May 6, 2019

Shipping address

Paseo Community Development District
Guard House
11980 Paseo Grande Blvd
Fort Myers, FL 33912

Payment methods

Master Card ending in 9480
Attn Accounting, Riverview, FL 33578

Order sub-total:	$169.98
Shipping:	FREE
Estimated Tax:	$11.05
Total:	**$181.03**

Need to cancel this order? Note: Most orders can be cancelled within 30 minutes.

Hide Order details

Expected delivery by May 7, 2019 11980 Paseo Grande Blvd, Fort Myers, FL

Canon 125 Black Toner Cartridge, Standard (3484B001AA)	Qty.2	$169.98

Staples Plus members always save more!

Free Next-Day Delivery – No minimum

$27.49 paper everyday

Guaranteed lowest price on your 5 favorites

VIEW ALL BENEFITS

Membership fee required. Exclusions apply.

YOU MAY ALSO LIKE

Hammermill Copy Plus 8.5" x 11" Copy Paper, 20 lbs, 92 Brightness, 500/Ream, (10660)

$36.99 ~~$63.99~~

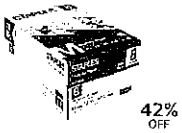

Staples Multiuse 8.5" x 11" Multipurpose Paper, 20 lbs., 94 Brightness, 500/Ream, 8 (3898)

$31.99 ~~$55.99~~

Staples® Manila File Folders, Letter, 3 Tab, Assorted Position, 100/Box (5121)

$9.89 ~~$10.29~~

Sharpie Permanent Markers, Fine Point, Black, 12/Pack (30001) (3589)

$9.69 ~~$12.19~~

Thank you for your order, Attn

Print Order | Cancel

A confirmation email will be sent to you at khardwick@rizzetta.com with your complete order details.

Order Number: 9799626672

Placed on: May 15, 2019

Shipping address

Paseo Community Development District
Guard House
11980 Paseo Grande Blvd
Fort Myers, FL 33912

Payment methods

Master Card ending in 9480
Attn Accounting, Riverview, FL 33578

Order sub-total:	$91.79
Shipping:	FREE
Estimated Tax:	$5.97
Total:	**$97.76**

Need to cancel this order? Note: Most orders can be cancelled within 30 minutes.

Hide Order details

Staples Plus members always save more!

Free Next-Day Delivery - No minimum

$27.49 paper everyday

Guaranteed lowest price on your 5 favorites

VIEW ALL BENEFITS

Membership fee required. Exclusions apply.

Expected delivery by May 24, 2019

11980 Paseo Grande Blvd, Fort Myers, FL

AdirOffice Large Ultimate White Drop Box Wall Mounted Mail Box 4.7"D x 11.2"W x 16.2"H (631-04-WHI)	Qty.1	$91.79

YOU MAY ALSO LIKE

Hammermill Copy Plus 8.5" x 11" Copy Paper, 20 lbs, 92 Brightness, 500/Ream, (10700)

Buy 2, get 1 free with code 45661

42% OFF

Staples Multiuse 8.5" x 11" Multipurpose Paper, 20 lbs., 94 Brightness, 500/Ream, 8 (3903)

$31.99 ~~$55.99~~

Staples® Manila File Folders, Letter, 3 Tab, Assorted Position, 100/Box (5133)

$9.89 ~~$10.29~~

Sharpie Permanent Markers, Fine Point, Black, 12/Pack (30001) (3600)

$9.69 ~~$12.19~~

More saving.
More doing.℠

14655 S. TAMIAMI TR. (NOW HIRING)
FT. MYERS, FL 33912 (239)437-6333

0276 00005 73014 05/23/19 10:47 AM
CASHIER ALTHEA

687073072013 NATRIA GW1GL <A>
NATRIA GRASS & WEED KILLER 1GAL RTU
3@14.97 44.91
052427780560 SUPER GLUE <A>
GORILLA SUPER GLUE .70 OZ
2@5.97 11.94
028756978725 GS121 50Z <A> 4.98
GS121 50Z CLEAR GUTTER SEALANT
764661003168 LEVEL SAND <A> 2.98
SAKRETE PAVER LEVELING SAND STEP 2
764661003175 PAVER BASE <A> 3.72
SAKRETE PAVER BASE STEP 1

SUBTOTAL 68.53
SALES TAX 4.46
TOTAL $72.99
XXXXXXXXXXXX4202 DEBIT
USD$ 72.99
AUTH CODE 670166
AID A0000000042203 Debit

0276 05 73014 05/23/2019 7327

RETURN POLICY DEFINITIONS

	POLICY ID	DAYS	POLICY EXPIRES ON
A	1	90	08/21/2019

****
DID WE NAIL IT?

Take a short survey for a chance TO WIN
A $5,000 HOME DEPOT GIFT CARD

Opine en español

www.homedepot.com/survey

User ID: H88 146593 146322
PASSWORD: 19273 146317

Entries must be completed within 14 days of purchase. Entrants must be 18 or older to enter. See complete rules on website. No purchase necessary.

Pinnacle Landscapes, Inc.

PO Box 100520
Cape Coral, FL 33910

Invoice

Date	Invoice #
5/31/2019	11024

RECEIVED
JUN 0 3 2019

Bill To
Paseo CDD c/o Rizzetta & Company 9530 Marketplace Road Suite 206 Fort Myers, Florida 33912

Terms
Due on receipt

Description	Qty	Rate	Amount
May			
General Maintenance		16,435.00	16,435.00
Off-site disposal with replacement liners for both Gazebos per week	4	100.00	400.00
Addendum Portion- Esperanza III and Esperanza IV		1,850.00	1,850.00
3% increase for Second Year service		560.55	560.55
Maintain 2 newly installed Pet Stations in the Esperanza section		189.00	189.00
	Total		$19,434.55

ate Rec'd Rizzetta & Co, Inc._____

)/M approval Belinda Blandon Date 6/6/19

Date entered JUN 0 6 2019

Fund 001 GL 53900 OC 4604

Check #_____

Pinnacle Landscapes, Inc.

PO Box 100520
Cape Coral, FL 33910

Invoice

Date	Invoice #
5/31/2019	11061

RECEIVED
JUN 0 3 2019

Bill To
Paseo CDD c/o Rizzetta & Company 9530 Marketplace Road Suite 206 Fort Myers, Florida 33912

Terms
Due on receipt

Description	Qty	Rate	Amount
At intersection of Penzance Blvd and Palomino Lane, fixed flowers that vehicle ran into. Labor Only		250.00	250.00
	Total		$250.00

Date Rec'd Rizzetta & Co, Inc._____
D/M approval Belinda Blandon Date 6/6/19
Date entered JUN 0 6 2019
Fund 001 GL 53900 OC 4650
Check #_____

Pinnacle Landscapes, Inc.

PO Box 100520
Cape Coral, FL 33910

Invoice

Date	Invoice #
5/31/2019	11066

RECEIVED
JUN 0 3 2019

Bill To
Paseo CDD c/o Rizzetta & Company 9530 Marketplace Road Suite 206 Fort Myers, Florida 33912

Terms
Due on receipt

Description	Qty	Rate	Amount
Installed irrigation for newly installed plants at shed.	2	45.00	90.00
Irrigation Repairs			
Labor-- 2 Hours @ $45.00/ Hour			
Irrigation Repairs			
Parts			
Funny Pipe	25	2.10	52.50
Barb Tee	2	2.10	4.20
Barb Elbows	3	2.10	6.30
Rainbird 6" Pop-up	3	15.00	45.00
Hunter MP Rotator Nozzle	3	9.05	27.15
Total			$225.15

Date Rec'd Rizzetta & Co, Inc_____
D/M approval Belinda Blandon Date 6/6/19
Date entered JUN 0 6 2019
Fund 001 GL 53900 OC 4609
Check #_____

Pinnacle Landscapes, Inc.

PO Box 100520
Cape Coral, FL 33910

RECEIVED
JUN 0 6 2019

Invoice

Date	Invoice #
6/4/2019	11074

Bill To
Paseo CDD c/o Rizzetta & Company 9530 Marketplace Road Suite 206 Fort Myers, Florida 33912

Terms
Due on receipt

Description	Qty	Rate	Amount
At the back right corner next to 8600 Falisto in the common area, replace plants to conceal well pumps. Install 15 gallon Podocarpus	5	140.00	700.00

Date Rec'd Rizzetta & Co, Inc_____

D/M approval Belinda Blandon Date 6/6/19

Date entered JUN 0 6 2019

Fund 001 GL 53900 OC 41650

Check #_____

	Total	$700.00

Rizzetta & Company, Inc.
3434 Colwell Avenue
Suite 200
Tampa FL 33614

Invoice

Date	Invoice #
6/1/2019	INV0000041038

RECEIVED
MAY 24 2019

Bill To:

PASEO CDD
3434 Colwell Avenue, Suite 200
Tampa FL 33614

Services for the month of	Terms	Client Number
June	Upon Receipt	00300

Description	Qty	Rate	Amount
District Management Services 3101	1.00	$2,975.00	$2,975.00
Administrative Services 3100	1.00	$766.67	$766.67
Accounting Services 3201	1.00	$1,910.00	$1,910.00
Financial & Revenue Collections 3111	1.00	$437.50	$437.50
Field Services	1.00	$700.00	$700.00
53900 - 4038			

Date Rec'd Rizzetta & Co, Inc_____

D/M approval Belinda Blandon Date 5/24/19

Date entered MAY 24 2019

Fund 001 GL 51300 OC NX

Check #_____

Subtotal	$6,789.17
Total	$6,789.17

Rizzetta Amenity Services, Inc
3434 Colwell Avenue
Suite 200
Tampa FL 33614

Invoice

Date	Invoice #
5/31/2019	INV00000000006335

Bill To:

Paseo CDD
3434 Colwell Avenue
Suite 200
Tampa FL 33614

RECEIVED
MAY 30 2019

Services for the month of	Terms	Client Number
May	Due on receipt	04016

Description	Qty	Rate	Amount
Actual Bi-Weekly Payroll	1.00	$1,880.35	$1,880.35
Employee(s) Insurance Reimbursement	1.00	$196.36	$196.36

Rizzetta & Co, Inc
Approval Belinda Blandon Date 5/30/19
Date entered MAY 30 2019
Fund 001 GL 53900 OC 4639
PO #

Subtotal	$2,076.71
Total	$2,076.71

Rizzetta Amenity Services, Inc
3434 Colwell Avenue
Suite 200
Tampa FL 33614

Invoice

Date	Invoice #
5/31/2019	INV00000000006366

Bill To:

Paseo CDD
3434 Colwell Avenue
Suite 200
Tampa FL 33614

Services for the month of	Terms	Client Number
May	Due on receipt	04016

Description	Qty	Rate	Amount
Auto Mileage & Travel	144.84	$1.00	$144.84
Cell Phone	50.00	$1.00	$50.00

RECEIVED
Rec'd Rizzetta & Co, Inc JUN 07 2019
M approval Belinda Blandon Date 6/10/19
Date entered JUN 10 2019
und GL OC
heck #

Subtotal	$194.84
Total	$194.84

Rizzetta Amenity Services, Inc
3434 Colwell Avenue
Suite 200
Tampa FL 33614

RECEIVED
JUN 13 2019

Invoice

Date	Invoice #
6/14/2019	INV00000000006399

Bill To:

Paseo CDD
3434 Colwell Avenue
Suite 200
Tampa FL 33614

Services for the month of	Terms	Client Number
June	Due on receipt	04016

Description	Qty	Rate	Amount
Amenity Management Services	1.00	$750.00	$750.00
Actual Bi-Weekly Payroll	1.00	$1,880.35	$1,880.35
Employee(s) Insurance Reimbursement	1.00	$196.36	$196.36

ate Rec'd Rizzetta & Co, Inc_____

D/M approval Belinda Blandon Date 6/14/19

ate entered JUN 14 2019

001 GL 53900 OC 4639

Subtotal	$2,826.71
Total	$2,826.71

Rizzetta Technology Services
3434 Colwell Avenue
Suite 200
Tampa FL 33614

Invoice

Date	Invoice #
6/1/2019	INV0000004428

Bill To:

PASEO CDD
3434 Colwell Avenue, Suite 200
Tampa FL 33614

RECEIVED
MAY 23 2019

Services for the month of	Terms	Client Number
June		00300

Description	Qty	Rate	Amount
EMail Accounts, Admin & Maintenance	6	$15.00	$90.00
Website Hosting, Backup and Content Updating	1	$100.00	$100.00

Date Rec'd Rizzetta & Co, Inc_____
D/M approval Belinda Blandon Date 5/24/19
Date entered MAY 24 2019
Fund 001 GL 51300 OC 5103
Check #_____

Subtotal	$190.00
Total	$190.00

SOLITUDE
LAKE MANAGEMENT

Voice: (888) 480-LAKE • Fax: (888) 358-0088

INVOIC

RECEIVED
JUN 11 2019

Invoice Number: PI-A00269461
Invoice Date: 06/01/19

PROPERTY: Paseo

SOLD TO: Paseo
c/o Rizzetta & Company
9530 Market Place Road Ste. 206
Ft. Myers, FL 33912

Customer ID	Customer PO	Payment Terms
P2267		Due upon receipt

Sales Rep ID	Shipping Method	Ship Date	Due Date
Bill Kurth			06/01/19

Qty	Item Description	Unit Price	Extension
1	Lake & Pond Management Services SVR06195 06/01/19 - 06/30/19 Lake & Pond Management Services	2,041.00	2,041.00

Date Rec'd Rizzetta & Co, Inc_____
D/M approval Belinda Blandon Date 6/14/19
Date entered JUN 14 2019
Fund 001 GL 53800 OC 4626
Check #_____

PLEASE REMIT PAYMENT TO:

SOLitude Lake Management, LLC
1320 Brookwood Drive, Suite H
Little Rock, AR 72202

Subtotal	2,041.00
Sales Tax	0.00
Total Invoice	2,041.00
Payment Received	0.00
TOTAL	**2,041.00**

Suntech Electrical Contractors, Inc.

Cape Coral, FL 33991
75 Mid Cape Terrace

Invoice

RECEIVED
MAY 29 2019

Date	Invoice #
5/29/2019	7906

Bill To
Paseo CDD 9530 Market Place Road Suite 206 Fort Myers, FL 33912

Project Name

P.O. No.	Terms

Description	Amount
Job: Paseo Community Date Completed: 4/22/19	443.00
Pole #112 Bibiana damaged by car, pole pushed over and breaker tripped	
Description: 1.) Dug up and straightened pole	
2.) Repaired damaged/pinched wiring	
3.) Replaced damaged surge protector and reset breaker	
Material Cost ---------- $68.00 Labor: 5 man hours @ $75/hr -------- $375.00	
Total Amount Due ---------- $443.00	

Date Rec'd Rizzetta & Co, Inc.
D/M approval Belinda Blandon Date 5/30/19
Date entered MAY 29 2019
Fund 001 GL 541100 OC 4613
Check #

	Phone #	(239) 772-7177	Payments/Credits	$0.00
			Total	$443.00

Suntech Electrical Contractors, Inc.

Cape Coral, FL 33991
75 Mid Cape Terrace

Invoice

RECEIVED
MAY 29 2019

Date	Invoice #
5/29/2019	7907

Bill To
Paseo CDD 9530 Market Place Road Suite 206 Fort Myers, FL 33912

Project Name

P.O. No.	Terms

Description	Amount
Job: Paseo Community Dates Completed: 4/23/19 & 4/24/19	1,085.00
Javier & Nalda street lights all out	
Description: 1.) Found breaker tripped and would not reset	
2.) Located shorted wire underground between poles 304 & 305. Wire was damaged when old tree was removed.	
3.) Isolated poles to reset breaker	
4.) Repaired conduit & replaced wire @ 304 & 305	
5.) Replaced photo cell for LV lights at roundabout	
Material Cost ---------- $335.00 Labor: 10 man hours @ $75/hr ----- $750.00	
Total Amount Due ---------- $1,085.00	

Date Rec'd Rizzetta & Co, Inc_____

D/M approval Belinda Blandon Date 5/30/19

Date entered MAY 29 2019

Fund 001 GL 54100 OC 4613

Check # _____

	Phone #	(239) 772-7177	Payments/Credits	$0.00
			Total	$1,085.00

Suntech Electrical Contractors, Inc.

Cape Coral, FL 33991
75 Mid Cape Terrace

Invoice

RECEIVED
MAY 29 2019

Date	Invoice #
5/29/2019	7908

Bill To
Paseo CDD 9530 Market Place Road Suite 206 Fort Myers, FL 33912

Project Name

P.O. No.	Terms

Description	Amount
Job: Paseo Community Date Completed: 4/30/19 Description: 1.) Replaced bad photocell for lake light control box 2.) Raised photocell & extended wires Material Cost ---------- $43.00 Labor: 2 man hours @ $75/hr------- $150.00 Total Amount Due ---------- $193.00	193.00

Date Rec'd Rizzetta & Co, Inc_____

D/M approval Belinda Blandon Date 5/30/19

Date entered MAY 29 2019

Fund 001 GL 54100 OC 4613

Check #_____

	Phone #	(239) 772-7177	**Payments/Credits**	$0.00
			Total	$193.00

Suntech Electrical Contractors, Inc.

Cape Coral, FL 33991
75 Mid Cape Terrace

Invoice

RECEIVED
MAY 29 2019

Date	Invoice #
5/29/2019	7909

Bill To
Paseo CDD 9530 Market Place Road Suite 206 Fort Myers, FL 33912

Project Name

P.O. No.	Terms

Description	Amount
Job: Paseo Community Date Completed: 5/2/19 Description: 1.) Replace broken 9 round box & repaired wires. Hit by lawnmower (fountain controls) 1- Weatherproof in ground electric box -------- $78.00 Labor: 2 man hours @ $75/hr ---------- $150.00 Total Amount Due ---------- $228.00	228.00

Date Rec'd Rizzetta & Co, Inc_____

D/M approval Belinda Blandon Date 5/30/19

Date entered MAY 29 2019

Fund 001 GL 54100 OC 4613

Check #_____

	Phone #	(239) 772-7177	Payments/Credits	$0.00
			Total	$228.00

Suntech Electrical Contractors, Inc.

Cape Coral, FL 33991
75 Mid Cape Terrace

RECEIVED
MAY 29 2019

Invoice

Date	Invoice #
5/29/2019	7910

Bill To
Paseo CDD 9530 Market Place Road Suite 206 Fort Myers, FL 33912

Project Name

P.O. No.	Terms

Description	Amount
Job: Paseo Community Date Completed: 5/20/19 Description: 1.) Replaced 2 bad photocells at guard house for landscape lighting 2.) Troubleshoot & repair 2 lights out at Esperaza 202 & 203. Found shorted junction box splice Material Cost ---------- $65.00 Labor: 4 man hours @ $75/hr ---- $300.00 Total Amount Due ---------- $365.00	365.00

Date Rec'd Rizzetta & Co, Inc_____

D/M approval Belinda Blandon Date 5/30/19

Date entered MAY 29 2019

Fund 001 GL 54100 OC 4613

Check #_____

	Phone #	(239) 772-7177	**Payments/Credits**	$0.00
			Total	$365.00

ALLIED UNIVERSAL
There for you.

Eight Tower Bridge
161 Washington Street, Suite 600
Conshohocken, PA 19428
(866) 703-7666

Invoice Date
01/31/2019

Invoice Number
8532134

RECEIVED
MAY 28 2019

Belinda Bladon
Paseo Community Development District
9530 Marketplace Road
Fort Myers, FL 33912-0393

To ensure proper credit, please reference this invoice number on your remittance advice.

PLEASE REMIT PAYMENT TO:
Allied Universal Security Services
P.O. Box 828854
Philadelphia, PA 19182-8854

Total Amount Due:
$2,666.88

Terms:
Net 30 Days

Service Location: **153496** Customer: **153496** Billing Period: **01/25/2019 - 01/31/2019**
Paseo Community Development District
11611 Paseo Grande Blvd
Fort Myers, FL 33912-8988

Description	Quantity	UOM	Price	Amount
Security Professional-Regular	128.00	HR	15.21	1,946.88
Supervisor-Regular	40.00	HR	18.00	720.00
Total Hours	168.00			0.00
Subtotal				**2,666.88**
Sales Tax Subtotal				**0.00**
Total for - Paseo Community Development District				**2,666.88**

Date Rec'd Rizzetta & Co, Inc_____
D/M approval Belinda Blandon Date 5/30/19
Date entered MAY 29 2019
Fund 001 GL 53900 OC 4904
Check #_____

Subtotal
$2,666.88
Sales Tax
$0.00
Total Amount Due:
$2,666.88

ALLIED UNIVERSAL
There for you.

Invoice Date
01/31/2019

Invoice Number
8532134

Invoice NO. 8532134 **Customer:** 153496 **Paseo Community Development District**

Description						Quantity	Bill Rate	Extension
Work Date	**Post Description**	**Employee Name**	**In Time**	**Out Time**	**Lunch**	**Hours**	**Hours Type**	
Security Professional-Regular						128.00	$15.21	$1,946.88
01/25/19	Security Professional	amanda watson	0:00	7:00		7.00	Hourly-Regular	
01/25/19	Security Professional	James Lanum	15:00	23:00		8.00	Hourly-Regular	
01/25/19	Security Professional	amanda watson	23:00	0:00		1.00	Hourly-Regular	
01/26/19	Security Professional	amanda watson	0:00	7:00		7.00	Hourly-Regular	
01/26/19	Security Professional	Luis Garcia-Perdomo	7:00	15:00		8.00	Hourly-Regular	
01/26/19	Security Professional	Chaquilla Holmes	15:00	23:00		8.00	Hourly-Regular	
01/26/19	Security Professional	DeLena Smith	23:00	0:00		1.00	Hourly-Regular	
01/27/19	Security Professional	DeLena Smith	0:00	7:00		7.00	Hourly-Regular	
01/27/19	Security Professional	Luis Garcia-Perdomo	7:00	15:00		8.00	Hourly-Regular	
01/27/19	Security Professional	Chaquilla Holmes	15:00	23:00		8.00	Hourly-Regular	
01/27/19	Security Professional	DeLena Smith	23:00	0:00		1.00	Hourly-Regular	
01/28/19	Security Professional	DeLena Smith	0:00	7:00		7.00	Hourly-Regular	
01/28/19	Security Professional	Luis Garcia-Perdomo	15:00	23:00		8.00	Hourly-Regular	
01/28/19	Security Professional	DeLena Smith	23:00	0:00		1.00	Hourly-Regular	
01/29/19	Security Professional	DeLena Smith	0:00	7:00		7.00	Hourly-Regular	
01/29/19	Security Professional	Luis Garcia-Perdomo	15:00	23:00		8.00	Hourly-Regular	
01/29/19	Security Professional	DeLena Smith	23:00	0:00		1.00	Hourly-Regular	
01/30/19	Security Professional	DeLena Smith	0:00	7:00		7.00	Hourly-Regular	
01/30/19	Security Professional	Luis Garcia-Perdomo	15:00	23:00		8.00	Hourly-Regular	
01/30/19	Security Professional	DeLena Smith	23:00	0:00		1.00	Hourly-Regular	
01/31/19	Security Professional	DeLena Smith	0:00	7:00		7.00	Hourly-Regular	
01/31/19	Security Professional	Nidley Louis	15:00	23:00		8.00	Hourly-Regular	
01/31/19	Security Professional	amanda watson	23:00	0:00		1.00	Hourly-Regular	
Supervisor-Regular						40.00	$18.00	$720.00
01/25/19	Security Professional	Denise Gdowik	7:00	15:00		8.00	Hourly-Regular	
01/28/19	Security Professional	Denise Gdowik	7:00	15:00		8.00	Hourly-Regular	
01/29/19	Security Professional	Denise Gdowik	7:00	15:00		8.00	Hourly-Regular	
01/30/19	Security Professional	Denise Gdowik	7:00	15:00		8.00	Hourly-Regular	
01/31/19	Security Professional	Denise Gdowik	7:00	15:00		8.00	Hourly-Regular	
Total Hours						168.00		$0.00

Revenue Total	**$2,666.88**
Tax Total	**$0.00**
Grand Total	**$2,666.88**

ALLIED UNIVERSAL
There for you.

Eight Tower Bridge
161 Washington Street, Suite 600
Conshohocken, PA 19428
(866) 703-7666

Invoice Date
05/23/2019

Invoice Number
8865345

To ensure proper credit, please reference this invoice number on your remittance advice.

PLEASE REMIT PAYMENT TO:
Allied Universal Security Services
P.O. Box 828854
Philadelphia, PA 19182-8854

RECEIVED
MAY 28 2019

Belinda Bladon
Paseo Community Development District
9530 Marketplace Road
Fort Myers, FL 33912-0393

Total Amount Due:
(USD) $2,666.88

Terms:
Net 30 Days

Service Location: **153496** Customer: **153496** Billing Period: **05/17/2019 - 05/23/2019**
Paseo Community Development District
11611 Paseo Grande Blvd
Fort Myers, FL 33912-8988

Description	Quantity	UOM	Price	Amount
Security Professional-Regular	128.00	HR	15.21	1,946.88
Supervisor-Regular	40.00	HR	18.00	720.00
Total Hours	168.00			0.00
Subtotal				**2,666.88**
Sales Tax Subtotal				**0.00**
Total for - Paseo Community Development District				**2,666.88**

Date Rec'd Rizzetta & Co, Inc_____
D/M approval Belinda Blandon Date 5/30/19
Date entered MAY 29 2019
Fund 001 GL 52900 OC 4904
Check #_____

Subtotal	
	$2,666.88
Sales Tax	
	$0.00
Total Amount Due:	
(USD)	**$2,666.88**

ALLIED UNIVERSAL
There for you.

Invoice Date
05/23/2019

Invoice Number
8865345

Invoice NO. **8865345** **Customer:** **153496** **Paseo Community Development District**

Description						Quantity	Bill Rate	Extension
Work Date	**Post Description**	**Employee Name**	**In Time**	**Out Time**	**Lunch**	**Hours**	**Hours Type**	
Security Professional-Regular						128.00	$15.21	$1,946.88
05/17/19	Security Professional	amanda watson	0:00	7:00		7.00	Hourly-Regular	
05/17/19	Security Professional	William neal	15:00	23:00		8.00	Hourly-Regular	
05/17/19	Security Professional	amanda watson	23:00	0:00		1.00	Hourly-Regular	
05/18/19	Security Professional	amanda watson	0:00	7:00		7.00	Hourly-Regular	
05/18/19	Security Professional	Denise Gdowik	7:00	15:00		8.00	Hourly-Regular	
05/18/19	Security Professional	William neal	15:00	23:00		8.00	Hourly-Regular	
05/18/19	Security Professional	DeLena Smith	23:00	0:00		1.00	Hourly-Regular	
05/19/19	Security Professional	DeLena Smith	0:00	7:00		7.00	Hourly-Regular	
05/19/19	Security Professional	Denise Gdowik	7:00	15:00		8.00	Hourly-Regular	
05/19/19	Security Professional	William neal	15:00	23:00		8.00	Hourly-Regular	
05/19/19	Security Professional	DeLena Smith	23:00	0:00		1.00	Hourly-Regular	
05/20/19	Security Professional	DeLena Smith	0:00	7:00		7.00	Hourly-Regular	
05/20/19	Security Professional	Denise Gdowik	15:00	23:00		8.00	Hourly-Regular	
05/20/19	Security Professional	DeLena Smith	23:00	0:00		1.00	Hourly-Regular	
05/21/19	Security Professional	DeLena Smith	0:00	7:00		7.00	Hourly-Regular	
05/21/19	Security Professional	Denise Gdowik	15:00	23:00		8.00	Hourly-Regular	
05/21/19	Security Professional	DeLena Smith	23:00	0:00		1.00	Hourly-Regular	
05/22/19	Security Professional	DeLena Smith	0:00	7:00		7.00	Hourly-Regular	
05/22/19	Security Professional	Denise Gdowik	15:00	23:00		8.00	Hourly-Regular	
05/22/19	Security Professional	DeLena Smith	23:00	0:00		1.00	Hourly-Regular	
05/23/19	Security Professional	DeLena Smith	0:00	7:00		7.00	Hourly-Regular	
05/23/19	Security Professional	Tony Chrysostome	15:00	23:00		8.00	Hourly-Regular	
05/23/19	Security Professional	amanda watson	23:00	0:00		1.00	Hourly-Regular	
Supervisor-Regular						40.00	$18.00	$720.00
05/17/19	Security Professional	Jacqueline Hudson	7:00	15:00		8.00	Hourly-Regular	
05/20/19	Security Professional	Jacqueline Hudson	7:00	15:00		8.00	Hourly-Regular	
05/21/19	Security Professional	Jacqueline Hudson	7:00	15:00		8.00	Hourly-Regular	
05/22/19	Security Professional	Jacqueline Hudson	7:00	15:00		8.00	Hourly-Regular	
05/23/19	Security Professional	Jacqueline Hudson	7:00	15:00		8.00	Hourly-Regular	
Total Hours						168.00		$0.00

Revenue Total	**$2,666.88**
Tax Total	**$0.00**
Grand Total	**$2,666.88**

ALLIED UNIVERSAL
There for you.

Eight Tower Bridge
161 Washington Street, Suite 600
Conshohocken, PA 19428
(866) 703-7666

RECEIVED
JUN 0 4 2019

Invoice Date
05/30/2019

Invoice Number
8881124

To ensure proper credit, please reference this invoice number on your remittance advice.

PLEASE REMIT PAYMENT TO:
Allied Universal Security Services
P.O. Box 828854
Philadelphia, PA 19182-8854

Total Amount Due:
(USD) $2,860.64

Terms:
Net 30 Days

Belinda Bladon
Paseo Community Development District
9530 Marketplace Road
Fort Myers, FL 33912-0393

Service Location: **153496** Customer: **153496** Billing Period: **05/24/2019 - 05/30/2019**
Paseo Community Development District
11611 Paseo Grande Blvd
Fort Myers, FL 33912-8988

Description	Quantity	UOM	Price	Amount
Security Professional-Regular	112.00	HR	15.21	1,703.52
Security Professional-Holiday	16.00	HR	22.82	365.12
Supervisor-Regular	32.00	HR	18.00	576.00
Supervisor-Overtime	8.00	HR	27.00	216.00
Total Hours	168.00			0.00
Subtotal				**2,860.64**
Sales Tax Subtotal				**0.00**
Total for - Paseo Community Development District				**2,860.64**

Date Rec'd Rizzetta & Co, Inc.
D/M approval Belinda Blandon Date 6/6/19
JUN 0 6 2019
Date entered
Fund 001 GL 53900 OC 4904
Check #

Subtotal	
	$2,860.64
Sales Tax	
	$0.00
Total Amount Due:	
(USD)	**$2,860.64**

ALLIED UNIVERSAL
There for you.

Invoice Date
05/30/2019

Invoice Number
8881124

Invoice NO. **8881124** **Customer:** **153496** **Paseo Community Development District**

Description						Quantity	Bill Rate	Extension
Work Date	**Post Description**	**Employee Name**	**In Time**	**Out Time**	**Lunch**	**Hours**	**Hours Type**	
Security Professional-Regular						112.00	$15.21	$1,703.52
05/24/19	Security Professional	amanda watson	0:00	7:00		7.00	Hourly-Regular	
05/24/19	Security Professional	Tony Chrysostome	15:00	23:00		8.00	Hourly-Regular	
05/24/19	Security Professional	amanda watson	23:00	0:00		1.00	Hourly-Regular	
05/25/19	Security Professional	amanda watson	0:00	7:00		7.00	Hourly-Regular	
05/25/19	Security Professional	Denise Gdowik	7:00	15:00		8.00	Hourly-Regular	
05/25/19	Security Professional	Tony Chrysostome	15:00	23:00		8.00	Hourly-Regular	
05/25/19	Security Professional	DeLena Smith	23:00	0:00		1.00	Hourly-Regular	
05/26/19	Security Professional	DeLena Smith	0:00	7:00		7.00	Hourly-Regular	
05/26/19	Security Professional	Denise Gdowik	7:00	15:00		8.00	Hourly-Regular	
05/26/19	Security Professional	Michael LaBelle	15:00	23:00		8.00	Hourly-Regular	
05/26/19	Security Professional	DeLena Smith	23:00	0:00		1.00	Hourly-Regular	
05/28/19	Security Professional	DeLena Smith	0:00	7:00		7.00	Hourly-Regular	
05/28/19	Security Professional	Denise Gdowik	15:00	23:00		8.00	Hourly-Regular	
05/28/19	Security Professional	DeLena Smith	23:00	0:00		1.00	Hourly-Regular	
05/29/19	Security Professional	DeLena Smith	0:00	7:00		7.00	Hourly-Regular	
05/29/19	Security Professional	Denise Gdowik	15:00	23:00		8.00	Hourly-Regular	
05/29/19	Security Professional	DeLena Smith	23:00	0:00		1.00	Hourly-Regular	
05/30/19	Security Professional	DeLena Smith	0:00	7:00		7.00	Hourly-Regular	
05/30/19	Security Professional	Tony Chrysostome	15:00	23:00		8.00	Hourly-Regular	
05/30/19	Security Professional	David Smith	23:00	0:00		1.00	Hourly-Regular	
Security Professional-Holiday						16.00	$22.82	$365.12
05/27/19	Security Professional	DeLena Smith	0:00	7:00		7.00	Hourly-Hol Worked 1.5	
05/27/19	Security Professional	Denise Gdowik	15:00	23:00		8.00	Hourly-Hol Worked 1.5	
05/27/19	Security Professional	DeLena Smith	23:00	0:00		1.00	Hourly-Hol Worked 1.5	
Supervisor-Regular						32.00	$18.00	$576.00
05/24/19	Security Professional	Jacqueline Hudson	7:00	15:00		8.00	Hourly-Regular	
05/28/19	Security Professional	Jacqueline Hudson	7:00	15:00		8.00	Hourly-Regular	
05/29/19	Security Professional	Jacqueline Hudson	7:00	15:00		8.00	Hourly-Regular	
05/30/19	Security Professional	Jacqueline Hudson	7:00	15:00		8.00	Hourly-Regular	
Supervisor-Overtime						8.00	$27.00	$216.00
05/27/19	Security Professional	Jacqueline Hudson	7:00	15:00		8.00	Hourly-Hol Worked 1.5	
Total Hours						168.00		$0.00

Revenue Total	**$2,860.64**
Tax Total	**$0.00**
Grand Total	**$2,860.64**

ALLIED UNIVERSAL
There for you.

Eight Tower Bridge
161 Washington Street, Suite 600
Conshohocken, PA 19428
(866) 703-7666

Invoice Date
06/06/2019

Invoice Number
8909749

To ensure proper credit, please reference this invoice number on your remittance advice.

PLEASE REMIT PAYMENT TO:
Allied Universal Security Services
P.O. Box 828854
Philadelphia, PA 19182-8854

Total Amount Due:
(USD) $2,666.88

Terms:
Net 30 Days

RECEIVED
JUN 17 2019

Belinda Bladon
Paseo Community Development District
9530 Marketplace Road
Fort Myers, FL 33912-0393

Service Location: **153496** Customer: **153496** Billing Period: **05/31/2019 - 06/06/2019**
Paseo Community Development District
11611 Paseo Grande Blvd
Fort Myers, FL 33912-8988

Description	Quantity	UOM	Price	Amount
Security Professional-Regular	128.00	HR	15.21	1,946.88
Supervisor-Regular	40.00	HR	18.00	720.00
Total Hours	168.00			0.00
Subtotal				**2,666.88**
Sales Tax Subtotal				**0.00**
Total for - Paseo Community Development District				**2,666.88**

Date Rec'd Rizzetta & Co, Inc_____
D/M approval Belinda Blandon Date 6/14/19
Date entered JUN 14 2019
Fund 001 GL 52900 OC 4904
Check #_____

Subtotal	
	$2,666.88
Sales Tax	
	$0.00
Total Amount Due:	
(USD)	**$2,666.88**

ALLIED UNIVERSAL
There for you.

Invoice Date
06/06/2019

Invoice Number
8909749

Invoice NO. 8909749 **Customer:** 153496 **Paseo Community Development District**

Description						Quantity	Bill Rate	Extension
Work Date	**Post Description**	**Employee Name**	**In Time**	**Out Time**	**Lunch**	**Hours**	**Hours Type**	
Security Professional-Regular						128.00	$15.21	$1,946.88
05/31/19	Security Professional	David Smith	0:00	7:00		7.00	Hourly-Regular	
05/31/19	Security Professional	Tony Chrysostome	15:00	23:00		8.00	Hourly-Regular	
05/31/19	Security Professional	David Smith	23:00	0:00		1.00	Hourly-Regular	
06/01/19	Security Professional	David Smith	0:00	7:00		7.00	Hourly-Regular	
06/01/19	Security Professional	Denise Gdowik	7:00	15:00		8.00	Hourly-Regular	
06/01/19	Security Professional	Tony Chrysostome	15:00	23:00		8.00	Hourly-Regular	
06/01/19	Security Professional	DeLena Smith	23:00	0:00		1.00	Hourly-Regular	
06/02/19	Security Professional	DeLena Smith	0:00	7:00		7.00	Hourly-Regular	
06/02/19	Security Professional	Denise Gdowik	7:00	15:00		8.00	Hourly-Regular	
06/02/19	Security Professional	Michael LaBelle	15:00	23:00		8.00	Hourly-Regular	
06/02/19	Security Professional	DeLena Smith	23:00	0:00		1.00	Hourly-Regular	
06/03/19	Security Professional	DeLena Smith	0:00	7:00		7.00	Hourly-Regular	
06/03/19	Security Professional	Denise Gdowik	15:00	23:00		8.00	Hourly-Regular	
06/03/19	Security Professional	DeLena Smith	23:00	0:00		1.00	Hourly-Regular	
06/04/19	Security Professional	DeLena Smith	0:00	7:00		7.00	Hourly-Regular	
06/04/19	Security Professional	Denise Gdowik	15:00	23:00		8.00	Hourly-Regular	
06/04/19	Security Professional	DeLena Smith	23:00	0:00		1.00	Hourly-Regular	
06/05/19	Security Professional	DeLena Smith	0:00	7:00		7.00	Hourly-Regular	
06/05/19	Security Professional	Denise Gdowik	15:00	23:00		8.00	Hourly-Regular	
06/05/19	Security Professional	DeLena Smith	23:00	0:00		1.00	Hourly-Regular	
06/06/19	Security Professional	DeLena Smith	0:00	7:00		7.00	Hourly-Regular	
06/06/19	Security Professional	Tony Chrysostome	15:00	23:00		8.00	Hourly-Regular	
06/06/19	Security Professional	David Smith	23:00	0:00		1.00	Hourly-Regular	
Supervisor-Regular						40.00	$18.00	$720.00
05/31/19	Security Professional	Jacqueline Hudson	7:00	15:00		8.00	Hourly-Regular	
06/03/19	Security Professional	Jacqueline Hudson	7:00	15:00		8.00	Hourly-Regular	
06/04/19	Security Professional	Jacqueline Hudson	7:00	15:00		8.00	Hourly-Regular	
06/05/19	Security Professional	Jacqueline Hudson	7:00	15:00		8.00	Hourly-Regular	
06/06/19	Security Professional	Jacqueline Hudson	7:00	15:00		8.00	Hourly-Regular	
Total Hours						168.00		$0.00

Revenue Total	**$2,666.88**
Tax Total	**$0.00**
Grand Total	**$2,666.88**

ALLIED UNIVERSAL
There for you.

Eight Tower Bridge
161 Washington Street, Suite 600
Conshohocken, PA 19428
(866) 703-7666

RECEIVED
JUN 19 2019

Invoice Date
06/13/2019

Invoice Number
8943648

To ensure proper credit, please reference this invoice number on your remittance advice.

PLEASE REMIT PAYMENT TO:
Allied Universal Security Services
P.O. Box 828854
Philadelphia, PA 19182-8854

Total Amount Due:
(USD) $2,666.88

Terms:
Net 30 Days

Belinda Bladon
Paseo Community Development District
9530 Marketplace Road
Fort Myers, FL 33912-0393

Service Location: **153496** Customer: **153496** Billing Period: **06/07/2019 - 06/13/2019**
Paseo Community Development District
11611 Paseo Grande Blvd
Fort Myers, FL 33912-8988

Description	Quantity	UOM	Price	Amount
Security Professional-Regular	128.00	HR	15.21	1,946.88
Supervisor-Regular	40.00	HR	18.00	720.00
Total Hours	168.00			0.00
Subtotal				**2,666.88**
Sales Tax Subtotal				**0.00**
Total for - Paseo Community Development District				**2,666.88**

Date Rec'd Rizzetta & Co, Inc_____
D/M approval Belinda Blandon Date 6/21/19
Date entered JUN 20 2019
Fund 001 GL 52900 OC 4904
Check #_____

Subtotal	
	$2,666.88
Sales Tax	
	$0.00
Total Amount Due:	
(USD)	**$2,666.88**

ALLIED UNIVERSAL
There for you.

Invoice Date
06/13/2019

Invoice Number
8943648

Invoice NO. 8943648 **Customer:** 153496 **Paseo Community Development District**

Description						Quantity	Bill Rate	Extension
Work Date	**Post Description**	**Employee Name**	**In Time**	**Out Time**	**Lunch**	**Hours**	**Hours Type**	
Security Professional-Regular						128.00	$15.21	$1,946.88
06/07/19	Security Professional	David Smith	0:00	7:00		7.00	Hourly-Regular	
06/07/19	Security Professional	Tony Chrysostome	15:00	23:00		8.00	Hourly-Regular	
06/07/19	Security Professional	David Smith	23:00	0:00		1.00	Hourly-Regular	
06/08/19	Security Professional	David Smith	0:00	7:00		7.00	Hourly-Regular	
06/08/19	Security Professional	Denise Gdowik	7:00	15:00		8.00	Hourly-Regular	
06/08/19	Security Professional	Tony Chrysostome	15:00	23:00		8.00	Hourly-Regular	
06/08/19	Security Professional	DeLena Smith	23:00	0:00		1.00	Hourly-Regular	
06/09/19	Security Professional	DeLena Smith	0:00	7:00		7.00	Hourly-Regular	
06/09/19	Security Professional	Denise Gdowik	7:00	15:00		8.00	Hourly-Regular	
06/09/19	Security Professional	William neal	15:00	23:00		8.00	Hourly-Regular	
06/09/19	Security Professional	DeLena Smith	23:00	0:00		1.00	Hourly-Regular	
06/10/19	Security Professional	DeLena Smith	0:00	7:00		7.00	Hourly-Regular	
06/10/19	Security Professional	Denise Gdowik	15:00	23:00		8.00	Hourly-Regular	
06/10/19	Security Professional	DeLena Smith	23:00	0:00		1.00	Hourly-Regular	
06/11/19	Security Professional	DeLena Smith	0:00	7:00		7.00	Hourly-Regular	
06/11/19	Security Professional	Denise Gdowik	15:00	23:00		8.00	Hourly-Regular	
06/11/19	Security Professional	DeLena Smith	23:00	0:00		1.00	Hourly-Regular	
06/12/19	Security Professional	DeLena Smith	0:00	7:00		7.00	Hourly-Regular	
06/12/19	Security Professional	Denise Gdowik	15:00	23:00		8.00	Hourly-Regular	
06/12/19	Security Professional	DeLena Smith	23:00	0:00		1.00	Hourly-Regular	
06/13/19	Security Professional	DeLena Smith	0:00	7:00		7.00	Hourly-Regular	
06/13/19	Security Professional	Tony Chrysostome	15:00	23:00		8.00	Hourly-Regular	
06/13/19	Security Professional	David Smith	23:00	0:00		1.00	Hourly-Regular	
Supervisor-Regular						40.00	$18.00	$720.00
06/07/19	Security Professional	Jacqueline Hudson	7:00	15:00		8.00	Hourly-Regular	
06/10/19	Security Professional	Jacqueline Hudson	7:00	15:00		8.00	Hourly-Regular	
06/11/19	Security Professional	Jacqueline Hudson	7:00	15:00		8.00	Hourly-Regular	
06/12/19	Security Professional	Jacqueline Hudson	7:00	15:00		8.00	Hourly-Regular	
06/13/19	Security Professional	Jacqueline Hudson	7:00	15:00		8.00	Hourly-Regular	
Total Hours						168.00		$0.00

Revenue Total	**$2,666.88**
Tax Total	**$0.00**
Grand Total	**$2,666.88**

Vertex Water Features
Lake Aeration Systems & Floating Fountains

Vertex Water Features, Inc.
2100 NW 33rd Street
Pompano Beach, FL 33069

Phone: (844) 432-4303
raquel.mason@vertexwaterfeatures.com
www.vertexwaterfeatures.com

RECEIVED
MAY 28 2019

Bill to
Paseo CDD 0493280
c/o Rizetta & Company
12750 Citrus Park Lane #115
Tampa FL 33625

Transaction Date: 5/28/2019

Terms: Net 30

Invoice I5011

Manufacturer	Model	Name
Unknown	(5) 3Hp Pool Pumps	Guardhouse
Unknown	30Hp Shoremount Sign	Sign

Description
Fountain Cleaning Agreement

Subtotal:	$460.00
Tax:	$0.00
Total:	$460.00

Date Rec'd Rizzetta & Co, Inc_____
D/M approval Belinda Blandon Date 5/30/19
Date entered MAY 29 2019
Fund 001 GL 53800 OC 4599
Check #_____

Vertex Water Features
Lake Aeration Systems & Floating Fountains

Vertex Water Features, Inc.
2100 NW 33rd Street
Pompano Beach, FL 33069

Phone: (844) 432-4303
raquel.mason@vertexwaterfeatures.com
www.vertexwaterfeatures.com

Bill to
Paseo CDD 0493280
c/o Rizetta & Company
12750 Citrus Park Lane #115
Tampa FL 33625

Ship to
Belinda Blandon
Paseo CDD 0493280
Palomino Lane & Penzance Blvd.
Ft. Myers FL 33912

Work Order #: 6266 Assigned Tech: Oscar M. (OM)

Completion Date: 5/24/2019

Equipment Type: Architectural Water Feature Name: Guardhouse

Manufacturer: Unknown Model: (5) 3Hp Pool Pumps

Install Date: Parts Warranty Expiration: Labor Warranty Expiration:

Service Comments			
1.	Cleaned moderate algae from components.	2.	All circuits normal at departure.
3.			
Services Performed			
4.	☑ Test Motor GFCI circuit ☑ Test Light GFCI circuit ☑ Clean Intake Screen ☑ Clean Light & Lenses ☑ Clean Float ☑ Clean Display Head/Ring & Jets ☑ Adjust Mooring Lines ☑ Reset Timers		
Readings			

Vertex Water Features
Lake Aeration Systems & Floating Fountains

Vertex Water Features, Inc.
2100 NW 33rd Street
Pompano Beach, FL 33069

Phone: (844) 432-4303
raquel.mason@vertexwaterfeatures.com
www.vertexwaterfeatures.com

5. Motor Voltage	240	6. Motor Amperage / Leakage	Various
7. Lighting Voltage	Na	8. Lighting Amperage / Leakage	Na
9. Timer Settings	On 24hrs		
Customer Contact Method			
10.	☑ Call Ahead ☑ Call After		

Vertex Water Features
Lake Aeration Systems & Floating Fountains

Vertex Water Features, Inc.
2100 NW 33rd Street
Pompano Beach, FL 33069

Phone: (844) 432-4303
raquel.mason@vertexwaterfeatures.com
www.vertexwaterfeatures.com

Bill to
Paseo CDD 0493280
c/o Rizetta & Company
12750 Citrus Park Lane #115
Tampa FL 33625

Ship to
Belinda Blandon
Paseo CDD 0493280
Palomino Lane & Penzance Blvd.
Ft. Myers FL 33912

Work Order #: 6266 Assigned Tech: Oscar M. (OM)

Completion Date: 5/24/2019

Equipment Type: Architectural Water Feature Name: Sign

Manufacturer: Unknown Model: 30Hp Shoremount Sign

Install Date: Parts Warranty Expiration: Labor Warranty Expiration:

Service Comments			
1.	Cleaned moderate algae from components.	2.	All circuits normal at departure.
3.			
Services Performed			
4.	☑ Test Motor GFCI circuit ☑ Test Light GFCI circuit ☑ Clean Intake Screen ☑ Clean Light & Lenses ☑ Clean Float ☑ Clean Display Head/Ring & Jets ☑ Adjust Mooring Lines ☑ Reset Timers		
Readings			

Vertex Water Features
Lake Aeration Systems & Floating Fountains

Vertex Water Features, Inc.
2100 NW 33rd Street
Pompano Beach, FL 33069

Phone: (844) 432-4303
raquel.mason@vertexwaterfeatures.com
www.vertexwaterfeatures.com

5. Motor Voltage	396	6. Motor Amperage / Leakage	38amps
7. Lighting Voltage	92	8. Lighting Amperage / Leakage	16.3amps
9. Timer Settings	Pump 7am to 12am. Lights on photo lens		
Customer Contact Method			
10.	☑ Call Ahead ☑ Call After		

PASEO COMMUNITY DEVELOPMENT DISTRICT

DISTRICT OFFICE · 12750 CITRUS PARK LANE · SUITE 150 · TAMPA, FLORIDA 33625

Operation and Maintenance Expenditures
July 2019
For Board Approval

Attached please find the check register listing the Operation and Maintenance expenditures paid from July 1, 2019 through July 31, 2019. This does not include expenditures previously approved by the Board.

The total items being presented: **$89,501.00**

Approval of Expenditures:

_____

_____ Chairperson

_____ Vice Chairperson

_____ Assistant Secretary

Paseo Community Development District

Paid Operation & Maintenance Expenditures

July 1, 2019 Through July 31, 2019

Vendor Name	Check Number	Invoice Number	Invoice Description	Invoice Amount
Barraco and Associates, Inc.	006284	19832	Engineering Services 06/19	$ 8,101.50
CenturyLink	006280	311416420 07/19	Telephone Service 07/19	$ 643.42
City of Fort Myers	006266	1-015317-00 06/19	Compactor 11604 Paseo Grande Blvd 06/19	$ 4,344.03
Crystal Clean Inc.	006286	790	Gatehouse Janitorial Services 07/19	$ 215.40
Cypress Access Systems	006257	9702	Service Contract 07/19	$ 269.20
Cypress Access Systems	006257	9809	Software Tutorial and Newwork Connection 06/19	$ 230.00
Cypress Access Systems	006272	9861	E-GO Plate Tags 07/19	$ 45.91
Cypress Access Systems	006281	9929	Monthly Service-08/19	$ 269.20
Cypress Access Systems	006281	9989	E-GO Plate Tags 07/19	$ 2,550.92
Emmanuel P. Samson	006277	MS062619	Board of Supervisors Meeting 06/26/19	$ 200.00
Emmanuel P. Samson	006292	MS071719	Board of Supervisors Meeting 07/17/19	$ 200.00

Paseo Community Development District

Paid Operation & Maintenance Expenditures

July 1, 2019 Through July 31, 2019

Vendor Name	Check Number	Invoice Number	Invoice Description	Invoice Amount
Florida Department of Revenue	006268	07.10.19	46-8015667667-8 Sales Tax 7/2019	$ 166.50
Florida Power & Light Company	006269	Electric Summary 06/19	FPL Electric Summary 06/19	$ 10,481.41
Home Team Pest Defense Inc	006258	63152222	Rodent Service 05/19	$ 40.00
James A. Heether	006273	JH062619	Board of Supervisors Meeting 06/26/19	$ 200.00
James A. Heether	006287	JH071719	Board of Supervisors Meeting 07/17/19	$ 200.00
Johnson Engineering, Inc.	006288	20097877-018-12	WUP Compliance Monitoring Svcs 06/19	$ 1,887.50
Latham, Shuker, Eden & Beaudine, LLP	006259	86340	Professional Services 05/19	$ 2,026.50
Latham, Shuker, Eden & Beaudine, LLP	006289	86526	Professional Services 06/19	$ 3,735.70
Lyle L. Hicks	006274	LH062619	Board of Supervisors Meeting 06/26/19	$ 200.00
Lyle L. Hicks	006290	LH071719	Board of Supervisors Meeting 07/17/19	$ 200.00
McDirmit Davis	006282	42034	FYE 9/30/18 Auditing Services	$ 4,300.00

Paseo Community Development District

Paid Operation & Maintenance Expenditures

July 1, 2019 Through July 31, 2019

Vendor Name	Check Number	Invoice Number	Invoice Description	Invoice Amount
Naples Electric Motor Works Inc	006260	25838	Pump Station Maintenance 06/19	$ 7,379.95
Pinnacle Landscapes, Inc.	006261	11157	Removed Dead Trees 06/19	$ 350.00
Pinnacle Landscapes, Inc.	006275	11164	Mannually Ran Well Pumps for 11 days- 06/19	$ 495.00
Pinnacle Landscapes, Inc.	006291	11183	Irrigation Repairs 07/19	$ 4,270.00
Pinnacle Landscapes, Inc.	006291	11187	Grub Prevention Application 07/19	$ 4,940.00
Rizzetta & Company, Inc.	006263	INV0000041487	District Management Fee 07/19	$ 6,789.17
Rizzetta Amenity Services, Inc.	006262	INV00000000006432	Actual Bi-Weekly Payroll 06/19	$ 2,076.71
Rizzetta Amenity Services, Inc.	006276	INV00000000006461	Cell Phone 06/19	$ 50.00
Rizzetta Amenity Services, Inc.	006276	INV00000000006494	Actual Bi-Weekly Payroll 07/19	$ 2,830.20
Rizzetta Technology Services, LLC	006264	INV0000004514	Website Email & Hosting Services 06	$ 190.00
Sharon E. Schulman	006278	SS062619	Board of Supervisors Meeting 06/26/19	$ 200.00

Paseo Community Development District

Paid Operation & Maintenance Expenditures

July 1, 2019 Through July 31, 2019

Vendor Name	Check Number	Invoice Number	Invoice Description	Invoice Amount
Sharon E. Schulman	006293	SS071719	Board of Supervisors Meeting 07/17/19	$ 200.00
Solitude Lake Management	006294	PI-A00278832	Lake & Pond Management Services 07/19	$ 2,041.00
Steven A. Brown-Cestero	006271	SB062619	Board of Supervisors Meeting 06/26/19	$ 200.00
Steven A. Brown-Cestero	006285	SB071719	Board of Supervisors Meeting 07/17/19	$ 200.00
Suntech Electrical Contractors, Inc.	006265	7944	Replaced Bad Bulbs in the Bridge Lights 06/19	$ 1,058.00
The Daily Breeze	006270	114354	Legal Advertisng AD#114354 07/19	$ 53.50
Universal Protection Service	006256	8958515	Security Services 06/14/19-06/20/19	$ 2,666.88
Universal Protection Service	006283	8976314	Security Services 06/21/19-06/27/19	$ 2,666.88
Universal Protection Service	006283	9005457	Security Services 06/28/19-07/04/19	$ 2,860.64
Universal Protection Service	006283	9033078	Security Services 07/05/19-07/11/19	$ 2,666.88
Universal Protection Service	006283	9053624	Security Services 07/12/19-07/18/19	$ 2,666.88
Vertex Water Features	006279	I5530	Monthly Fountian Cleaning 06/19	$ 1,325.00

Paseo Community Development District

Paid Operation & Maintenance Expenditures

July 1, 2019 Through July 31, 2019

Vendor Name	Check Number	Invoice Number	Invoice Description	Invoice Amount
Vertex Water Features	006279	I5531	Fountian Repairs 06/19	$ 357.12
Vertex Water Features	006279	I5532	Fountian Cleaning 06/19	$ 460.00
Report Total				$ 89,501.00

Barraco and Associates
2271 McGregor Boulevard, Suite 100
Fort Myers, FL 33901

RECEIVED
JUL 22 2019

Paseo CDD
Rizzetta & Company, Inc.
9530 Market Place Rd, Suite 206
Fort Myers, FL 33912

Invoice number 19832
Date 07/19/2019

Project **22168 Paseo CDD**

Description	Contract Amount	Percent Complete	Billed To Date	Less Previous Billing	Amount Due This Billing
01 (TM) Misc. Engineering Services	0.00	0.00	158,375.56	158,135.56	240.00
02 (TM) Updated Engineers Report	10,500.00	371.65	39,023.75	39,023.75	0.00
03 (TM) Out of Scope Services	0.00	0.00	155,236.30	147,374.80	7,861.50
04 (TM) Reimbursables	0.00	0.00	1,364.26	1,364.26	0.00
Total	10,500.00	3,371.43	353,999.87	345,898.37	8,101.50

01 (TM) Misc. Engineering Services

	Hours	Rate	Billed Amount
Project Manager	2.00	120.00	240.00
Prepare for and attend CDD meeting			
Misc. Engineering Services subtotal			240.00

03 (TM) Out of Scope Services

	Hours	Rate	Billed Amount
Construction Observer	31.75	78.00	2,476.50
Check storm structures for sediment.			
Professional Engineer	6.00	195.00	1,170.00
Meeting with Hotwire to discuss plans. Provide CAD linework. *Hotwire plan review letter.* *Correspondence re: Hotwire agreement.* *Correspondence re: master association bulkhead repair.* *Correspondence re: Honc contract and barge.* *Correspondence re: Honc license agreement.*			
Project Manager	9.00	120.00	1,080.00
Prepare brick paver bid exhibit and request bids *Brick paver repair exhibit* *Brick paver and concrete repair bids* *Request bids* *Review storm drainage inspection notes* *Curb bid comparison*			
Project Technician	22.50	100.00	2,250.00
Paver Repair EXH			
Senior Project Technician	2.00	120.00	240.00
Reduce field notes and plot paver locations *Processed paver dip locations done on 06-07* *Processed fieldwork done for location of paver dip areas.*			
Principal Professional Engineer	3.00	215.00	645.00

03 (TM) Out of Scope Services

	Hours	Rate	Billed Amount
Review Hotwire plans *Hot Wire request for change in requirements and revivew use of lake by others*			
subtotal	74.25		7,861.50
Out of Scope Services subtotal			7,861.50
		Invoice total	**8,101.50**

Aging Summary

Invoice Number	Invoice Date	Outstanding	Current	Over 30	Over 60	Over 90	Over 120
19832	07/19/2019	8,101.50	8,101.50				
	Total	8,101.50	8,101.50	0.00	0.00	0.00	0.00

Date Rec'd Rizzetta & Co, Inc_____

D/M approval Belinda Blandon Date 7/29/19

Date entered JUL 2 6 2019

Fund 001 GL 51300 OC 3103

Check #_____

Account Name: PASEO COMM DEVELOPMENT DIST
Account Number: 311416420

P.O. Box 1319
Charlotte, NC 28201-1319

Bill Date: Jul. 13, 2019

Previous Balance	Payments	Adjustments Credits	Current Charges
1,154.50	1,105.34 CR	0.00	594.26

Payment Summary

Previous Balance	1,154.50
Payment by check received on JUN 28	541.04 CR
Payment by check received on JUN 28	564.30 CR
Balance	**49.16**

Adjustments/Credits Summary

Adjustments to Previous Balance	0.00
Total Adjustments	**0.00**

Current Charge Summary

Monthly Charges	557.00
One-Time Charges	0.00
Usage Charges	1.56
Discount	10.00 CR
Adjustments	2.20
Taxes, Fees, and Surcharges	24.00
Late Fee	19.50
Total Current Charges	**594.26**

Due Date Aug. 05, 2019 Amount Due 643.42

Just a friendly reminder that your account is past due. If you have already made your payment, thank you for bringing your account up to date.

IMPORTANT NEWS

RECEIVED
JUL 17 2019

Date Rec'd Rizzetta & Co, Inc_____
D/M approval Belinda Blandon Date 7/19/19
Date entered JUL 18 2019
Fund 001 GL 54100 OC 4103
Check #_____

PLEASE FOLD, TEAR HERE AND RETURN THIS PORTION WITH YOUR PAYMENT

FOR CHANGE OF ADDRESS OR PAYMENT AUTHORIZATION:
☐ Please check here and complete reverse. Thank You.

D

Account Number: 311416420
Amount Due By Aug. 05, 2019 643.42

PASEO COMM DEVELOPMENT DIST
ATTN: ATT ACCT PAYABLES
12750 CITRUS PARK LANE Cir STE 115
TAMPA, FL 33625-0393

CenturyLink
P.O. Box 1319
Charlotte, NC 28201-1319

0000311416420900000000491650000000007131900000643420700000

P.O. Box 1319
Charlotte, NC 28201-1319

Bill Date: Jul. 13, 2019

Important Notices and Information :

Allocation of charges:

Service Categories	Past Due	Current Month	Total Due
Basic Services	0.00	243.35	243.35
Other Services	49.16	350.91	400.07
All Services	49.16	594.26	643.42

Failure to pay Basic charges may result in the disconnection of those Services. Please contact CenturyLink regarding any questions or problems with your bill before the due date.

CenturyLink works every day to bring you solutions that best meet your total communication needs. Learn more about our value pricing that will help reduce your household expenses when you bundle all of your services with CenturyLink. You can pay your bill and check out our newest products and services by visiting www.centurylink.com .

LATE FEE REMINDER: Late fees may be charged each month for any eligible unpaid balances not paid in full by the due date listed on your bill. The methods for calculating late fee amounts vary by state and product. For more information you may access Terms and Conditions and Tariff materials at http://www.centurylink.com/tariffs.

Effective August 1, 2019, the Facility Relocation Charge will increase to $0.71. If you have any questions, please call a Customer Care Representative at the telephone number printed in the Manage Your Account or Important Information sections of your bill.

Thank you for choosing CenturyLink for your communication needs--we value you as our customer.

Third-Party Billing Block
Cramming occurs when unauthorized charges appear on your telephone bill. To help prevent unwanted third party charges on your bill, contact CenturyLink and request, at no charge, a bill block that will prevent some third party charges such as charitable contributions, dial-up Internet by non-CenturyLink companies or other non-telecommunications charges from appearing on your bill.

Pure Broadband Package includes the following services: High Speed Internet, access line, 911 service, Outbound Call Block, Toll Restriction, Subscriber Line Charge, and non-published number.

CenturyLink Small Business Internet now comes with a business-grade Wi-Fi connection. Activate your dual Wi-Fi technology with 40 Mbps or higher internet speed plans.
This dual Wi-Fi technology provides secure, but separate, access for both customers and employees. Get business Wi-Fi with easy setup, separate and secure employee and customer

311416420
PASEO COMM DEVELOPMENT DIST
ATTN: ATT ACCT PAYABLES
12750 CITRUS PARK LANE Cir STE 115
TAMPA, FL 33625-0393

Address Information Changes Effective Date _____

New Address _____

City _____ State _____ Zip _____

Work Phone ( ) _____ Home Phone ( ) _____

MONTHLY AUTOPAY AUTHORIZATION FORM
I authorize CenturyLink to draft my savings or checking account for any accrued balance on my account.

(We reserve the right to revoke this if bank approval is denied)

☐ **Checking Account** ☐ **Savings Account**
(Select the type of account to be drafted and attach a voided check/savings slip.)

_____ _____
Signature required *Date*

Please continue to pay your bill until notified on your statement that autopay is active.

P.O. Box 1319
Charlotte, NC 28201-1319

Important Notices and Information :

access, and more. To learn more call 877-612-4942 or visit centurylink.com/businesscenter

EMBARQ Florida, Inc. DBA CenturyLink

FREE Enrollment| With Control Center, you can update your billing information, view and pay your bill and much more. Visit us online at www.centurylink.com/business/login.

CenturyLink should be notified within 90 days after the CenturyLink Bill Date of any billing discrepancies on your statement.

P.O. Box 1319
Charlotte, NC 28201-1319

Bill Date: Jul. 13, 2019

Current Charges Summary — Service From Jul. 13, 2019

Monthly Charges	Qty	Rate	Amount
Broadband Cost Recovery Fee	3 @	3.99	11.97
Facility Relocation Cost Recovery Fee	4 @	0.53	2.12
Fed Universal Service Chg	4 @	2.01	8.04
Inside Wire Maintenance	3 @	7.00	21.00
Long Distance Line Charge	4 @	3.99	15.96
Non-Telecom Services Surcharge	1 @	2.99	2.99
Router Equip Fee	1 @	9.99	9.99
Router Equipment Fee	1 @	9.99	9.99
Static IP	1 @	10.00	10.00
Static IP - IPV4	1 @	10.00	10.00
Subscriber Line & Access Recovery Charge	4 @	11.76	47.04
CenturyLink Business Bundle B1 Primary Line	1 @	89.99	89.99
Core Connect Business Additional Line Bundle	1 @	44.00	44.00
Core Connect Business Additional Line Bundle	1 @	44.00	44.00
Core Connect Business Primary Line Bundle	1 @	129.00	129.00
Pure Business Broadband	1 @	100.91	100.91
Total Monthly Charges			**557.00**
One-time Charges			
Late Payment Fee			19.50
Total One-time Charges			**19.50**
Usage Charges	**Calls**	**Mins**	
International	11	13.0	1.56
Total Usage Charges	**11**	**13.0**	**1.56**
Discounts			
High Speed Data Discount			10.00 CR
Total Discounts			**10.00 CR**
Adjustments			
Fed Universal Service Chg JUL 02 To JUL 12			0.72
Access Recovery Charge JUL 02 To JUL 12			1.48
Total Adjustments			**2.20**
Taxes, Fees and Surcharges			
Administrative Expense Fee			0.68
Federal Property Surcharge			2.15
Federal Universal Service Fund Surcharge			18.84
Federal and Other Cost Recovery Fee			2.33
Total Taxes, Fees and Surcharges			**24.00**

Total Current Charges **594.26**

Contact Numbers

www.centurylink.com/myaccount Pay Online
1-866-712-1996 Pay by Phone
1-800-786-6272 Customer Service
1-800-786-6272 Repair Service

P.O. Box 1319
Charlotte, NC 28201-1319

Contact Numbers

Visit us online at www.centurylink.com.

Package Summary

Core Connect Business Additional Line Bundle			
Monthly Recurring	44.00		
239-225-0845			
Multi Line 1 Party Business			
Unlimited Long Distance (Voice Only)			
Package Charges		44.00	
Core Connect Business Additional Line Bundle			
Monthly Recurring	44.00		
239-225-7791			
Multi Line 1 Party Business			
Unlimited Long Distance (Voice Only)			
Package Charges		44.00	
Core Connect Business Primary Line Bundle			
Monthly Recurring	129.00		
239-225-0782			
Multi Line 1 Party Business			
Unlimited Long Distance (Voice Only)			
eq000897732			
HSI 10M CC 3YR			
Package Charges		129.00	
Pure Business Broadband			
Monthly Recurring	100.91		
239-225-1769			
CTL102733149			
HSI 10.0M			
Package Charges		100.91	
CenturyLink Business Bundle B1 Primary Line			
Monthly Recurring	89.99		
239-225-7505			
3-Way Calling			
Call Forward Busy			
Call Forward No Answer			
Call Forwarding			
Multi Line Business			
Unlimited Long Distance (Voice Only)			
CTL106996178			
High Speed Internet Up to 10M			
F92-399-6711			
Core Service Pack Business Essential			
Package Charges		89.99	
Discounts			
High Speed Data Discount		10.00 CR	
Package Charges After Discount		79.99	
Subtotal Package			397.90
Package Taxes, Fees and Surcharges			12.40
Total Package			410.30

P.O. Box 1319
Charlotte, NC 28201-1319

Bill Date: Jul. 13, 2019

Charge Detail

Local Service from JUL 13 to AUG 12

Product-ID: 239-225-0782

Monthly Charges			
Facility Relocation Cost Recovery Fee	0.53		
Fed Universal Service Chg	2.01		
Subscriber Line & Access Recovery Charge	11.76		
Total Local Exchange Services		14.30	
** Inside Wire Maintenance	7.00		
Long Distance Line Charge	3.99		
Total Optional Features/Services		10.99	
Total Monthly Charges			25.29
Usage Charges			
International	1.56		
Total Usage Charges			1.56
Adjustments			
** Access Recovery Charge JUL 02 To JUL 12	0.37		
** Fed Universal Service Chg JUL 02 To JUL 12	0.18		
Total Adjustments			0.55
Charge Detail For 239-225-0782			**27.40**

Product-ID: 239-225-0845

Monthly Charges			
Caller ID Number Only	0.00		
Facility Relocation Cost Recovery Fee	0.53		
Fed Universal Service Chg	2.01		
Subscriber Line & Access Recovery Charge	11.76		
Total Local Exchange Services		14.30	
** Inside Wire Maintenance	7.00		
Long Distance Line Charge	3.99		
Total Optional Features/Services		10.99	
Total Monthly Charges			25.29
Adjustments			
** Access Recovery Charge JUL 02 To JUL 12	0.37		
** Fed Universal Service Chg JUL 02 To JUL 12	0.18		
Total Adjustments			0.55
Charge Detail For 239-225-0845			**25.84**

Product-ID: 239-225-7505

Monthly Charges			
Facility Relocation Cost Recovery Fee	0.53		
Fed Universal Service Chg	2.01		
Subscriber Line & Access Recovery Charge	11.76		
Total Local Exchange Services		14.30	
Long Distance Line Charge	3.99		
Total Optional Features/Services		3.99	
Total Monthly Charges			18.29

P.O. Box 1319
Charlotte, NC 28201-1319

Charge Detail

Local Service from JUL 13 to AUG 12

Product-ID: 239-225-7505

Adjustments

**	Access Recovery Charge JUL 02 To JUL 12	0.37		
**	Fed Universal Service Chg JUL 02 To JUL 12	0.18		
	Total Adjustments			0.55

Charge Detail For 239-225-7505 18.84

Product-ID: 239-225-7791

Monthly Charges

	Facility Relocation Cost Recovery Fee	0.53		
	Fed Universal Service Chg	2.01		
	Subscriber Line & Access Recovery Charge	11.76		
	Total Local Exchange Services		14.30	
**	Inside Wire Maintenance	7.00		
	Long Distance Line Charge	3.99		
**	Non-Telecom Services Surcharge	2.99		
	Total Optional Features/Services		13.98	
	Total Monthly Charges			28.28

Adjustments

**	Access Recovery Charge JUL 02 To JUL 12	0.37		
**	Fed Universal Service Chg JUL 02 To JUL 12	0.18		
	Total Adjustments			0.55

Charge Detail For 239-225-7791 28.83

Product-ID: CTL102733149

Monthly Charges

**	Broadband Cost Recovery Fee	3.99		
**	PC Security - F-Secure	0.00		
**	Router Equipment Fee	9.99		
**	Static IP - IPV4	10.00		
**	Web Hosting	0.00		
	Total Optional Features/Services		23.98	
	Total Monthly Charges			23.98

Charge Detail For CTL102733149 23.98

Product-ID: CTL106996178

Monthly Charges

**	Broadband Cost Recovery Fee	3.99		
**	Router Equip Fee	9.99		
	Total Optional Features/Services		13.98	
	Total Monthly Charges			13.98

Charge Detail For CTL106996178 13.98

P.O. Box 1319
Charlotte, NC 28201-1319

Bill Date: Jul. 13, 2019

Charge Detail

Local Service from JUL 13 to AUG 12

Product-ID: eq000897732 2392250845

Monthly Charges

**	Broadband Cost Recovery Fee	3.99		
**	PC Security - F-Secure	0.00		
**	Static IP	10.00		
**	Web Hosting	0.00		
	Total Optional Features/Services		13.99	
	Total Monthly Charges			13.99

Charge Detail For eq000897732	13.99
Total Charge Detail	152.86
Total Package Summary	397.90
Tax, Fees and Surcharges	24.00
Total Current Charges	574.76

** Nonregulated Charge(s) - nonpayment for NONREGULATED SERVICES OR PRODUCTS may result in the disconnection or restriction of such services, and such delinquencies may be subject to collection. Local services will not be disconnected for nonpayment of nonregulated charges. Nonpayment of toll charges may result in the disconnection of toll service, and such delinquencies may be subject to collection.

P.O. Box 1319
Charlotte, NC 28201-1319

Bill Date: Jul. 13, 2019

CenturyLink Long Distance

Detailed activity on this page is informational only. This activity is billed and totaled from the charge detail page.

Recurring Charges

Long Distance Line Charge		3.99	
Total For	**239-225-0782**		3.99
Long Distance Line Charge		3.99	
Total For	**239-225-0845**		3.99
Long Distance Line Charge		3.99	
Total For	**239-225-7505**		3.99
Long Distance Line Charge		3.99	
Total For	**239-225-7791**		3.99
Total Recurring Charges			**15.96**

Calling Plan Summary - Informational Only

Charges in this Summary are Itemized and Totaled in Other Sections of the Bill

	Plan Summary	Monthly Amount	Usage Amount	Total Amount
V	International	0.00	1.56	1.56
	Unlimited Long Distance	0.00	0.00	0.00
	Total	**0.00**	**1.56**	**1.56**

Long Distance Call Detail

Item	Date	Time	Called From	Called To		Number	Call Plan	Call Type	Min	Charge
1	JUN14	11:55 am		BURLINGTON	ON	905-638-3300	V	Direct Call	1.0	0.12
2	JUN16	11:49 am		UNIONVILLE	ON	905-479-5916	V	Direct Call	2.0	0.24
3	JUN18	12:44 pm		TORONTO	ON	416-707-5535	V	Direct Call	1.0	0.12
4	JUN19	11:50 am		OTTAWAHULL	ON	613-227-1616	V	Direct Call	1.0	0.12
5	JUN24	08:42 am		TORONTO	ON	416-707-5535	V	Direct Call	1.0	0.12
6	JUL01	12:08 pm		OTTAWAHULL	ON	613-227-1616	V	Direct Call	1.0	0.12
7	JUL01	12:12 pm		TORONTO	ON	416-409-3772	V	Direct Call	1.0	0.12
8	JUL01	12:13 pm		TORONTO	ON	647-274-3772	V	Direct Call	1.0	0.12
9	JUL05	10:47 am		TORONTO	ON	647-282-1219	V	Direct Call	2.0	0.24
10	JUL08	04:38 pm		OSHAWA	ON	905-718-0510	V	Direct Call	1.0	0.12
11	JUL10	09:42 am		OTTAWA	ON	613-323-1271	V	Direct Call	1.0	0.12
	Total for	**239-225-0782**							**13.0**	**1.56**
			Total Of Itemized Calls						**13.0**	**1.56**

Taxes, Fees and Surcharges

Administrative Expense Fee	0.26	
Federal Property Surcharge	0.83	
Federal Universal Service Fund Surcharge	4.63	
Federal and Other Cost Recovery Fee	0.88	
Total Taxes, Fees and Surcharges		**6.60**

Total CenturyLink Long Distance **24.12**

P.O. Box 1319
Charlotte, NC 28201-1319

CenturyLink Long Distance

Detailed activity on this page is informational only. This activity is billed and totaled from the charge detail page.

Executive Bill Summaries

Line Summary Without Pins	Calls	Mins	Amount
239-225-0782	434	155.6	1.56
Total	**434**	**155.6**	**1.56**

P.O. Box 1319
Charlotte, NC 28201-1319

CenturyLink Internet Services

We appreciate your business.

For Technical Support call 1-800-786-6272.

Pay by Phone 24 Hours/7 Days a Week 1-866-712-1996.

PRISM TV customers: Support for Video or Internet call 1-866-314-4148.

INVOICE

CITY OF FORT MYERS
Utilities Department
Billing Inquiries: (239)321-8100

City of Palms

account information			
ACCOUNT NAME	PASEO		
SERVICE ADDRESS			
11604 PASEO GRANDE BLVD			
ACCOUNT NUMBER	1-015317-00		
BILL DATE	07/01/19	DUE DATE	07/15/19
PREVIOUS BALANCE	CURRENT CHARGES	AMOUNT DUE	
$4,027.88	$4,344.03	$4,344.0	

Exciting News – The City of Fort Myers Utilities Department IVR (Interactive Voice Response) is available were you may now pay your utility bill over the telephone with a credit card. Please call 877-333-0866 to pay your utility bill by telephone.

RECEIVED
JUL 0 5 2019

amount due	
Previous Balance	4,027.8
Payment on 6/20/2019- Thank you	4,027.8
Billing	4,344.0
TOTAL AMOUNT DUE	**$4,344.(**

Date	Order Number	Service Fee	Units	Amount
6/1/2019	SO#: 827313	40 YARD COMPACTOR	0.00	231.0
6/4/2019	SO#: 826202	40 YARD COMPACTOR	0.00	231.0
6/7/2019	SO#: 829334	40 YARD COMPACTOR	0.00	231.0
6/11/2019	SO#: 829802	40 YARD COMPACTOR	0.00	231.0
6/14/2019	SO#: 829955	40 YARD COMPACTOR	0.00	231.0
6/18/2019	SO#: 830237	40 YARD COMPACTOR	0.00	231.0
6/21/2019	SO#: 832975	40 YARD COMPACTOR	0.00	231.0
6/25/2019	SO#: 834769	40 YARD COMPACTOR	0.00	231.0
6/28/2019	SO#: 835331	40 YARD COMPACTOR	0.00	231.0
7/31/2019	WT2182305 SO827313	TONNAGE - SOLID WASTE	1.60	91.3
7/31/2019	WT2183880 SO826202	TONNAGE - SOLID WASTE	2.51	143.3
7/31/2019	WT2185745 SO829334	TONNAGE - SOLID WASTE	1.72	98.2
7/31/2019	WT2188217 SO829802	TONNAGE - SOLID WASTE	2.96	168.9
7/31/2019	WY2190188 SO829955	TONNAGE - SOLID WASTE	1.65	94.2
7/31/2019	WT2192740 SO830237	TONNAGE - SOLID WASTE	2.82	160.9
7/31/2019	WT2194431 SO832975	TONNAGE - SOLID WASTE	2.18	124.4
7/31/2019	WT2196651 SO834769	TONNAGE - SOLID WASTE	2.72	155.2
7/31/2019	WT2198916 SO835331	TONNAGE - SOLID WASTE	1.94	110.7

KEEP THIS PORTION FOR YOUR RECORDS
PLEASE RETURN THIS PORTION ALONG WITH YOUR PAYMENT

City of Palms

CITY OF FORT MYERS
Utilities Department
P O Box 340
Fort Myers, FL 33902-0340

STATEMENT ENCLOSED

account information			
ACCOUNT NAME	PASEO		
SERVICE ADDRESS			
11604 PASEO GRANDE BLVD			
ACCOUNT NUMBER	1-015317-00		
BILL DATE	07/01/19	DUE DATE	07/15/19
PREVIOUS BALANCE	CURRENT CHARGES	AMOUNT DUE	
$4,027.88	$4,344.03	$4,344.(	

ADDRESSEE

176-

PASEO
C/O RIZZETTA & COMPANY, INC
12750 CITRUS PARK LN STE 115
TAMPA, FL 33625-3784

MAKE CHECK PAYABLE TO: CITY OF FORT MYERS

CITY OF FORT MYERS
P.O. BOX 30185
TAMPA, FL 33630-3185

1.01.531.7000003400031.

INVOICE

CITY OF FORT MYERS
Utilities Department
Billing Inquiries: (239)321-8100

City of Palms

account information			
ACCOUNT NAME	PASEO		
SERVICE ADDRESS			
11604 PASEO GRANDE BLVD			
ACCOUNT NUMBER	1-015317-00		
BILL DATE	07/01/19	DUE DATE	07/15/19
PREVIOUS BALANCE	CURRENT CHARGES	AMOUNT DUE	
$4,027.88	$4,344.03	$4,344.0	

7/31/2019		STAND-BY CHARGE	1.00	79.5
7/31/2019		COMPACTOR TURNKEY CHARGE	1.00	318.0
6/1/2019	SO#: 827312	20 YARD RECYCLING ROLL-OFF CENTER	0.00	80.0
6/1/2019	SO#: 826205	20 YARD RECYCLING ROLL-OFF CENTER	0.00	80.0
6/1/2019	SO#: 829333	20 YARD RECYCLING ROLL-OFF CENTER	0.00	80.0
6/1/2019	SO#: 829801	20 YARD RECYCLING ROLL-OFF CENTER	0.00	80.0
6/1/2019	SO#: 829954	20 YARD RECYCLING ROLL-OFF CENTER	0.00	80.0
6/1/2019	SO#: 830238	20 YARD RECYCLING ROLL-OFF CENTER	0.00	80.0
6/1/2019	SO#: 832974	20 YARD RECYCLING ROLL-OFF CENTER	0.00	80.0
6/1/2019	SO#: 834772	20 YARD RECYCLING ROLL-OFF CENTER	0.00	80.0
6/1/2019	SO#: 835332	20 YARD RECYCLING ROLL-OFF CENTER	0.00	80.0
		TOTAL CURRENT CHARGES		**$4,344.0**

0 - 30 days	31 - 60 days	61 - 180 days	180 + days
4,344.03			

PAST DUE AMOUN
$0.(

Date Rec'd Rizzetta & Co, Inc_____

D/M approval *Belinda Blandon* Date 7/8/19

Date entered JUL 0 5 2019

Fund 001 GL 53400 OC 4309

Check #_____

KEEP THIS PORTION FOR YOUR RECORDS
PLEASE RETURN THIS PORTION ALONG WITH YOUR PAYMENT

City of Palms

CITY OF FORT MYERS
Utilities Department
P O Box 340
Fort Myers, FL 33902-0340

STATEMENT ENCLOSED

account information			
ACCOUNT NAME	PASEO		
SERVICE ADDRESS			
11604 PASEO GRANDE BLVD			
ACCOUNT NUMBER	1-015317-00		
BILL DATE	07/01/19	DUE DATE	07/15/19
PREVIOUS BALANCE	CURRENT CHARGES	AMOUNT DUE	
$4,027.88	$4,344.03	$4,344.(	

ADDRESSEE

MAKE CHECK PAYABLE TO: CITY OF FORT MYERS

176-

CITY OF FORT MYERS
P.O. BOX 30185
TAMPA, FL 33630-3185

Invoice

Crystal Clean (N)
3120 Winkler Ave
Suite 14
Ft. Myers, FL 33916

JUL 0 9 2019

Invoice #	790
Date	7/2/2019
Due Date	7/28/2019
Terms	28th

Bill To

Paseo CDD
3434 Colwell Ave., Suite 200
Tampa, FL 33614

Servicing Address

Paseo
11980 Paseo Blvd.
Fort Myers, FL 33912

	Quantity	Rate	Amount
July 2019 Service Cleaning Weekly Cleaning Of Gatehouse (7/5/19)	1	45.00	45.00
Weekly Cleaning Of Gatehouse (7/12/19)	1	45.00	45.00
Weekly Cleaning Of Gatehouse (7/19/19i)	1	45.00	45.00
Weekly Cleaning Of Gatehouse (7/26/19)	1	45.00	45.00
Towel 11X8.8 2 Ply Reliable Brand Paper Kitchen Roll WH 85Sh/RL 30RL/CS	30	1.18	35.40

.e Rec'd Rizzetta & Co, Inc
/M approval Belinda Blandon Date 7/12/19
ate entered JUL 1 1 2019
und 001 GL 52900 OC 4700
eck #

www.CleaningFortMyers.com

E-Mail: CrystalClean@CleaningFortMyers.com
Phone #: (239) 936-7700
Fax #: (239) 936-7065

Subtotal	$215.40
Sales Tax (0.0%)	$0.00
Total	$215.40
Payments/Credits	$0.00
Balance Due	$215.40

CYPRESS ACCESS SYSTEMS, INC

Date	Invoice #
6/6/2019	9702

25270 Bernwood Dr. Ste 7
Bonita Springs, FL 34135

Bill To
Paseo CDD c/o Rizzetta & Company, Inc. 9530 Marketplace Road, Suite 206 Ft. Myers, FL 33912

RECEIVED
JUN 11 2019

Phone #	Fax #
239-494-8604	239-390-2621
carrie@cypressaccess.com	

S.O. No.	Terms
JUL-SC	Due on receipt

Item	Quantity	Description	Rate	Amount
SC/PM/LP	1	SERVICE CONTRACT - July Billing	269.20	269.20
		Date Rec'd Rizzetta & Co, Inc_____ D/M approval Belinda Blandon Date 6/14/19 JUN 14 2019 Date entered_____ Fund 001 GL 52900 OC 4499 Check #_____		
		We appreciate your business.		
		Balance Due		$269.20

CYPRESS ACCESS SYSTEMS, INC

Date	Invoice #
6/18/2019	9809

25270 Bernwood Dr. Ste 7
Bonita Springs, FL 34135

RECEIVED
JUN 21 2019

Bill To
Paseo CDD c/o Rizzetta & Company, Inc. 9530 Marketplace Road, Suite 206 Ft. Myers, FL 33912

Phone #	Fax #
239-494-8604	239-390-2621
carrie@cypressaccess.com	

S.O. No.	Terms
29661743	Due on receipt

Item	Quantity	Description	Rate	Amount
BASE CHARGE	1	Base Charge: Appt set for 6/4/19 to set up Checkpoint admin app and perform software tutorial for Michael Lake.	50.00	50.00
LABOR	1.5	Labor 06/04/19 - Performed installation, found network connection to be very slow in his office & recommended line be checked. Completed tutorial.	120.00	180.00
		Date Rec'd Rizzetta & Co, Inc_____ D/M approval Belinda Blandon Date 6/28/19 Date entered JUN 27 2019 Fund 001 GL 53900 OC 4699 Check #_____		
		All work is complete!		
		Balance Due		$230.00

CYPRESS ACCESS SYSTEMS, INC

Date	Invoice #
7/2/2019	9861

25270 Bernwood Dr. Ste 7
Bonita Springs, FL 34135

Bill To
Paseo CDD c/o Rizzetta & Company, Inc. 9530 Marketplace Road, Suite 206 Ft. Myers, FL 33912

Phone #	Fax #
239-494-8604	239-390-2621
carrie@cypressaccess.com	

S.O. No.	Terms
21596	Due on receipt

Item	Quantity	Description	Rate	Amount
13-0711-951	1	eGo Plus License Plate Tags FC: 189 #32906	36.40	36.40
SHIPPING	1	Shipping Charges	9.51	9.51
		We appreciate your business.		
		Balance Due		$45.91

Date Rec'd Rizzetta & Co, Inc_____
D/M approval Belinda Blandon Date 7/12/19
Date entered JUL 1 1 2019
Fund 001 GL 52900 OC 4631
Check #_____

2159

CYPRESS ACCESS SYSTEMS, INC

25270 Bernwood Dr. Suite #7 • Bonita Springs, FL 34135 • Phone 239-494-8604
www.cyressaccess.com • www.checkpointaccess.com
State of Florida Contractor License # ES12001419

Service Ticket

Customer: Paseo Work Ordered By: Belinda B. Date: 6/25

Billing Address:

☐ Service
☐ Install Q#
☐ After Hours

Jobsite Address:

Description of Request:

Order 1 License Plate Transponder

Action Taken:

FC: 189 #32906

Parts Used:

Qty	P/N	Description	Price Ea.	Price Tot.
1	LPT	FC: 189 #32906	36.40	
1		Shipping	9.51	
			Parts Total	

Labor:

Technician	Date	Time Start	Time Stop	Time Tot.
			Labor Total	

Travel
Parts
Labor
Total Due

Follow Up:

X Carrie Collins
Service call performed as described above

6/25
Date

Proof of Delivery

Dear Customer,

This notice serves as proof of delivery for the shipment listed below.

Tracking Number

1ZR212400393215973

Weight

1.00 LBS

Service

UPS Ground

Shipped / Billed On

06/25/2019

Delivered On

06/27/2019 1:38 P.M.

Delivered To

11980 PASEO GRANDE BLVD
FORT MYERS, FL, 33912, US

Received By

LAKE

Left At

Receiver

Thank you for giving us this opportunity to serve you. Details are only available for shipments delivered within the last 120 days. Please print for your records if you require this information after 120 days.

Sincerely,

UPS

Tracking results provided by UPS: 07/02/2019 10:39 A.M. EST

CYPRESS ACCESS SYSTEMS, INC

Date	Invoice #
7/5/2019	9929

25270 Bernwood Dr. Ste 7
Bonita Springs, FL 34135

RECEIVED
JUL 10 2019

Bill To
Paseo CDD c/o Rizzetta & Company, Inc. 9530 Marketplace Road, Suite 206 Ft. Myers, FL 33912

Phone #	Fax #
239-494-8604	239-390-2621
carrie@cypressaccess.com	

S.O. No.	Terms
SC-AUG	Due on receipt

Item	Quantity	Description	Rate	Amount
SC-100	1	Service Contract for Covered Equipment - August Billing	269.20	269.20
		We appreciate your business.		
		Balance Due		$269.20

Date Rec'd Rizzetta & Co, Inc.
D/M approval Belinda Blandon Date 7/12/19
Date entered JUL 11 2019
Fund 001 GL 52900 OC 46099
Check #

CYPRESS ACCESS SYSTEMS, INC

Date	Invoice #
7/11/2019	9989

25270 Bernwood Dr. Ste 7
Bonita Springs, FL 34135

Bill To
Paseo CDD c/o Rizzetta & Company, Inc. 9530 Marketplace Road, Suite 206 Ft. Myers, FL 33912

RECEIVED
JUL 16 2019

Phone #	Fax #
239-494-8604	239-390-2621
carrie@cypressaccess.com	

S.O. No.	Terms
21656	Due on receipt

Item	Quantity	Description	Rate	Amount
13-3250-001	150	eGo Plus Micro Mini tag HF - 26 Bit Wiegand Format FC: 037 #54410-54559	16.95	2,542.50
SHIPPING	1	Shipping Charges	8.42	8.42
		We appreciate your business.		
		Balance Due		$2,550.92

Date Rec'd Rizzetta & Co., Inc. _____
D/M approval Belinda Blandon Date 7/19/19
Date entered JUL 17 2019
Fund 001 GL 52900 OC 46031
Check # _____

21656

CYPRESS ACCESS SYSTEMS, INC

25270 Bernwood Dr. Suite #7 • Bonita Springs, FL 34135 • Phone 239-494-8604
www.cyressaccess.com • www.checkpointaccess.com
State of Florida Contractor License # ES12001419

Service Ticket

Customer: Paseo Work Ordered By: Kari H. Date: 7/2/19

Billing Address:

☐ Service
☐ Install Q#
☐ After Hours

Jobsite Address:

Description of Request:

Order 150 W/S transponders

Action Taken:

FC: 037 #54410-54559

Parts Used:

Qty	P/N	Description	Price Ea.	Price Tot.
150	W/S	FC: 037 #54410-54559	16.95	
1		Shipping	8.42	
			Parts Total	

Labor:

Technician	Date	Time Start	Time Stop	Time Tot.
			Labor Total	

Travel
Parts
Labor
Total Due

X Carrie C.
Service call performed as described above

7/2/19
Date

Follow Up:

Proof of Delivery

Dear Customer,

This notice serves as proof of delivery for the shipment listed below.

Tracking Number
1ZR212400398640147

Weight
1.00 LBS

Service

UPS Ground

Shipped / Billed On
07/02/2019

Delivered On

07/03/2019 2:27 P.M.

Delivered To
11980 PASEO GRANDE BLVD
FORT MYERS, FL, 33912, US

Received By

HUDSON

Left At
Reception

Thank you for giving us this opportunity to serve you. Details are only available for shipments delivered within the last 120 days. Please print for your records if you require this information after 120 days.

Sincerely,

UPS

Tracking results provided by UPS: 07/11/2019 9:20 A.M. EST

Paseo Community Development District
Meeting Date: June 26, 2019

SUPERVISOR PAY REQUEST

RECEIVED
JUL 10 2019

Name of Board Supervisor	Check if present	Check if paid
✓ Manny Samson phone	✓	X
✓ Steve Brown	✓	X
✓ Jim Heether	✓	X
✓ Sharon Schulman	✓	X
✓ Lyle Hicks	✓	X

(*) Does not get paid

EXTENDED MEETING TIMECARD

Meeting Start Time:	5:30 pm
Meeting End Time:	7:06 pm
Total Meeting Time:	1 hr 36 mins

Time Over _____ () Hours:	

Total at $175 per Hour:	

DM Signature: _____

Rec'd Rizzetta & Co, Inc_____
DM approval Belinda Blandon Date 7/12/19
Date entered JUL 11 2019
Fund 001 GL 51100 OC 1101
Check #_____

Paseo Community Development District
Meeting Date: July 17, 2019

SUPERVISOR PAY REQUEST

RECEIVED
JUL 19 2019

Name of Board Supervisor	Check if present	Check if paid
Manny Samson	✓	X
Steve Brown	✓	X
Jim Heether	✓	X
Sharon Schulman	✓	X
Lyle Hicks	✓	X

(*) Does not get paid

EXTENDED MEETING TIMECARD

Meeting Start Time:	11:00 am
Meeting End Time:	12:21 pm
Total Meeting Time:	1 hr 21 mins

Time Over _____ () Hours:	

Total at $175 per Hour:	

DM Signature: _____

Date Rec'd Rizzetta & Co, Inc_____

D/M approval Belinda Blandon Date 7/29/19

Date entered JUL 26 2019

Fund 001 GL 51100 OC 1101

Check #_____

Florida Sales and Use Tax Return
Reporting Period
APR-JUN 2019

DR-15EZ
R. 01/19

Certificate Number: 46-8015667667-8
Surtax Rate: .0050

HD/PM DATE: __/__/__

PASEO COMMUNITY DEVELOPMENT DISTRICT
11611 PASEO GRANDE BLVD
FORT MYERS FL 33912-8988

Location/Mailing Address Changes:
New Location Address: _____

Telephone Number: ( )
New Mailing Address: _____

FLORIDA DEPARTMENT OF REVENUE
5050 W TENNESSEE ST
TALLAHASSEE FL 32399-0120

Amount Due From Line 9 On Reverse Side: 164.50

Due: JUL 01 2019
Late After: JUL 22 2019

0500 0 20190630 0001003043 1 4000001566 7667 6

	DOLLARS	CENTS
1. Gross Sales (Do not include tax)	2,560	50
2. Exempt Sales (Include these in Gross Sales, Line 1)		
3. Taxable Sales/Purchases (Include Internet/Out-of-State Purchases)	2,560	50
4. Total Tax Due (Include Discretionary Sales Surtax from Line B)		
5. Less Lawful Deductions		
6. Less DOR Credit Memo		
7. Net Tax Due	166	50
8. ~~Less Collection Allowance or~~ Plus Penalty and Interest		
9. **Amount Due With Return** (Enter this amount on front)	166	50

Under penalties of perjury, I declare that I have read this return and the facts stated in it are true.

Signature of Taxpayer | Date | Telephone #

Signature of Preparer: Tiffany Bogaty | Date: 7/10/19 | Telephone #: 813 925 9450

Discretionary Sales Surtax Information
A. Taxable Sales and Purchases **NOT** Subject to **DISCRETIONARY SALES SURTAX**
B. Total Discretionary Sales Surtax Due

E-file / E-pay to Receive Collection Allowance

Please do not fold or staple.

Date Rec'd Rizzetta & Co., Inc. 7/10/19
D/M approval Belinda Blando Date 7/10/19
Date entered 7/10/19
Fund 001 GL 23300 OC
Check # _____

PASEO CDD **FPL Electric Summary**

Month: 06/19 Dated 07/03

For: 06/04/19-07/03/19

Account	Location	Service Address	Code	Amount
01665-48552	FOUNTAINS	23 Herminia St # Fntn	001 53100 4302	$ 248.58
04931-75376	FOUNTAINS	10959 Esteban Dr #Fntn	001 53100 4302	$ 437.13
10354-74582	FOUNTAINS	11138 Paseo Dr # Fntn	001 53100 4302	$ 334.24
15270-01067	FOUNTAINS	11141 Esteban Dr #LF-A	001 53100 4302	$ 457.66
23770-96140	IRRIGATION	8201 Penzance Blvd # Well	001 53100 4306	$ 1,771.73
24743-50267	IRRIGATION	1 Paseo Grande BLvd # Pumps	001 53100 4306	$ 690.05
25633-32200	STREET LIGHTS	11803 Nalds St # SL	001 53100 4307	$ 111.83
27060-67036	FOUNTAINS	9101 Penzance Blvd # Fntn	001 53100 4302	$ 1,011.45
27900-20180	STREET LIGHTS	11030 Esteban Dr #SL	001 53100 4302	$ 118.15
28147-18504	FOUNTAINS	11812 Nalda St # Fntn	001 53100 4302	$ 221.85
28467-91263	STREET LIGHTS	11170 Paseo Dr # SL	001 53100 4307	$ 38.47
42347-70065	FOUNTAINS	8303 Adelio Ln #LF-E	001 53100 4302	$ 254.08
44616-42516	COMPACTOR	11604 Paseo Grande Blvd # Trash	001 53100 4305	$ 33.37
45446-69478	STREET LIGHTS	8366 Dario Way # SL-2	001 53100 4307	$ 26.36
51072-41068	FOUNTAINS	11141 Esteban Dr #LF-C	001 53100 4302	$ 320.24
52896-15485	STREET LIGHTS	8307 Bibiana Way # SL	001 53100 4307	$ 337.03
53689-07407	FOUNTAINS	8307 Bibiana Way # Fntn	001 53100 4302	$ 911.27
60702-89472	STREET LIGHTS	11060 Esteban Dr #SL-3	001 53100 4307	$ 29.56
66280-27523	STREET LIGHTS	8201 Penzance Blvd # SL	001 53100 4307	$ 28.27
66689-00456	STREET LIGHTS	11964 Tulio Way # SL	001 53100 4307	$ 123.35
67803-16599	IRRIGATION	8446 Olinda Way #Irr	001 53100 4306	$ 12.86
73070-05293	STREET LIGHTS	11442 Paseo Grande Blvd # SL	001 53100 4307	$ 67.70
76250-95372	FOUNTAINS	11047 Esteban Dr # Fntn	001 53100 4302	$ 342.65
80522-99453	ENTRY/GATE	11980 Paseo Grande Blvd # Grd Hse	001 53100 4301	$ 863.78
83715-35140	STREET LIGHTS	11442 Paseo Grande Blvd # St Lights	001 53100 4307	$ 94.22
89871-07540	SIGN	0 Paseo Dr #Sign	001 53100 4301	$ 61.59
90833-40068	FOUNTAINS	8303 Adelio Ln #LF-D	001 53100 4302	$ 275.69
91696-74562	IRRIGATION	8600 Falisto PL # Pump	001 53100 4306	$ 703.59
92030-59473	STREET LIGHTS	8305 Adelio Ln # SL-1	001 53100 4307	$ 98.14
99853-21067	FOUNTAINS	11141 Esteban Dr #LF-B	001 53100 4302	$ 437.65
56759-56527	IRRIGATION	11197 Paseo Dr #Pump	001 53100 4306	$ 18.87
		TOTAL		
			Summary	
		ELECTRIC-UTILITY ENTRY/GATE	**001 53100 4301**	**925.37**
		ELECTRIC-FOUNTAIN	**001 53100 4302**	**5,370.64**
		ELECTRIC-UTILITY COMPACTOR	**001 53100 4305**	**33.37**
		ELECTRIC-UTILITY IRRIGATION	**001 53100 4306**	**3,197.10**
		ELECTRIC-UTILITY SERVICES	**001 53100 4307**	**954.93**
			Total	**10,481.41**

Date Rec'd Rizzetta & Co, Inc_____

D/M approval Belinda Blandon Date 7/12/19

Date entered JUL 1 1 2019

Fund 001 GL 53100 OC **

Check #_____

FPL

/ 27

5303016654855248584200000

Please request changes on the back.
Notes on the front will not be detected.

B 5,8 5303 4

#BWNDJNQ ***
#3519943BQ769122#
PASEO CDD
C/O PASEO CDD
12750 CITRUS PARK LN STE 115
TAMPA FL 33625-3784

1 450196

Make check payable to FPL in U.S. funds and mail along with this coupon to:

FPL
GENERAL MAIL FACILITY
MIAMI FL 33188-0001

Account number	Total amount you owe	New charges due by	Amount enclosed
01665-48552	**$248.58**	**Jul 24 2019**	**$**

Your electric statement

For: Jun 04 2019 to Jul 03 2019 (29 days)
Customer name: PASEO CDD
Service address: 23 HERMINIA ST #FNTN

Account number: 01665-48552

Statement date: Jul 03 2019
Next meter reading: Aug 03 2019

Amount of your last bill	Payments (-)	Additional activity (+ or -)	Balance before new charges (=)	New charges (+)	Total amount you owe (=)	New charges due by
277.30	277.30 CR	0.00	0.00	248.58	**$248.58**	**Jul 24 2019**

Meter reading - Meter KCD4989

Current reading	47913
Previous reading	- 45544
kWh used	**2369**

Energy usage

	Last Year	This Year
kWh this month	1337	2369
Service days	30	29
kWh per day	44	81

****The electric service amount includes the following charges:**

Customer charge:	$10.54
Fuel: *($0.025630 per kWh)*	$60.72
Non-fuel: *($0.065310 per kWh)*	$154.73

Amount of your last bill		
Payment received - Thank you		277.30
Balance before new charges		277.30 CR
		$0.00
New charges (Rate: GS-1 GENERAL SVC NON-DEMAND / BUSINESS)		
Electric service amount	225.99**	
Storm charge	2.82	
Gross receipts tax	5.87	
Franchise charge	13.90	
Total new charges		$248.58
Total amount you owe		**$248.58**

- Payment received after **September 26, 2019** is considered **LATE**; a late payment charge of **1%** will apply.
- The storm charge on your August bill will be removed to reflect final payment of bonds issued during the 2004 and 2005 hurricane restoration effort. There will be a true-up on a future bill, subject to Florida Public Service Commission approval. Learn more: FPL.com/rates.

Please have your account number ready when contacting FPL.
Customer service: 1-800-375-2434
Outside Florida: 1-800-226-3545

FPL

2 450196 / 27

5303049317537603173400000

Please request changes on the back.
Notes on the front will not be detected.

B 5,8 5303 0

#BWNDJNQ ***
#3519943BQ769122#
PASEO CDD
12750 CITRUS PARK LN STE 115
TAMPA FL 33625-3784

Make check payable to FPL in U.S. funds and mail along with this coupon to:

FPL
GENERAL MAIL FACILITY
MIAMI FL 33188-0001

Account number	Total amount you owe	New charges due by	Amount enclosed
04931-75376	**$437.13**	**Jul 24 2019**	**$**

Your electric statement

For: Jun 04 2019 to Jul 03 2019 (29 days)
Customer name: PASEO CDD
Service address: 10959 ESTEBAN DR # FNTN

Account number: 04931-75376

Statement date: Jul 03 2019
Next meter reading: Aug 03 2019

Amount of your last bill	Payments (-)	Additional activity (+ or -)	Balance before new charges (=)	New charges (+)	Total amount you owe (=)	New charges due by
482.58	482.58 CR	0.00	0.00	437.13	**$437.13**	**Jul 24 2019**

Meter reading - Meter ACD8688

Current reading	31950
Previous reading	- 27697
kWh used	**4253**

Energy usage

	Last Year	This Year
kWh this month	4524	4253
Service days	30	29
kWh per day	151	147

****The electric service amount includes the following charges:**

Customer charge:	$10.54
Fuel: *($0.025630 per kWh)*	$109.00
Non-fuel: *($0.065310 per kWh)*	$277.76

Amount of your last bill	482.58
Payment received - Thank you	482.58 CR
Balance before new charges	$0.00

New charges (Rate: GS-1 GENERAL SVC NON-DEMAND / BUSINESS)

Electric service amount	397.30**	
Storm charge	5.06	
Gross receipts tax	10.32	
Franchise charge	24.45	
Total new charges		$437.13

Total amount you owe **$437.13**

- Payment received after **September 26, 2019** is considered **LATE**; a late payment charge of **1%** will apply.
- The storm charge on your August bill will be removed to reflect final payment of bonds issued during the 2004 and 2005 hurricane restoration effort. There will be a true-up on a future bill, subject to Florida Public Service Commission approval. Learn more: FPL.com/rates.

Please have your account number ready when contacting FPL.
Customer service: 1-800-375-2434
Outside Florida: 1-800-226-3545

FPL.

3 450196 / 27 32917 5303103547458264243300000

Please request changes on the back.
Notes on the front will not be detected.

B 5,8 5303 6

#BWNDJNQ ***
#3519943BQ769122#
PASEO CDD
12750 CITRUS PARK LN STE 115
TAMPA FL 33625-3784

Make check payable to FPL in U.S. funds and mail along with this coupon to:

FPL
GENERAL MAIL FACILITY
MIAMI FL 33188-0001

Account number	Total amount you owe	New charges due by	Amount enclosed
10354-74582	**$334.24**	**Jul 24 2019**	**$**

Your electric statement

For: Jun 04 2019 to Jul 03 2019 (29 days)
Customer name: PASEO CDD
Service address: 11138 PASEO DR # FNTN

Account number: 10354-74582

Statement date: Jul 03 2019
Next meter reading: Aug 03 2019

Amount of your last bill	Payments (-)	Additional activity (+ or -)	Balance before new charges (=)	New charges (+)	Total amount you owe (=)	New charges due by
362.82	362.82 CR	0.00	0.00	334.24	**$334.24**	**Jul 24 2019**

Meter reading - Meter ACD4412

Current reading	29778
Previous reading	- 26553
kWh used	**3225**

Energy usage

	Last Year	This Year
kWh this month	3182	3225
Service days	30	29
kWh per day	106	111

****The electric service amount includes the following charges:**

Customer charge:	$10.54
Fuel: *($0.025630 per kWh)*	$82.66
Non-fuel: *($0.065310 per kWh)*	$210.62

Enroll now in FPL Budget Billing by paying $329.17 in 1 payment by the due date instead of $334.24. Your bill will be about the same each month & stabilized year-round. Learn more at FPL.com/bb

Amount of your last bill		362.82
Payment received - Thank you		362.82 CR
Balance before new charges		$0.00
New charges (Rate: GS-1 GENERAL SVC NON-DEMAND / BUSINESS)		
Electric service amount	303.82**	
Storm charge	3.84	
Gross receipts tax	7.89	
Franchise charge	18.69	
Total new charges		$334.24

Total amount you owe **$334.24**

- Payment received after **September 26, 2019** is considered **LATE**; a late payment charge of **1%** will apply.
- The storm charge on your August bill will be removed to reflect final payment of bonds issued during the 2004 and 2005 hurricane restoration effort. There will be a true-up on a future bill, subject to Florida Public Service Commission approval. Learn more: FPL.com/rates.

Please have your account number ready when contacting FPL.
Customer service: 1-800-375-2434
Outside Florida: 1-800-226-3545
To report power outages: 1-800-4OUTAGE (468-8243)

FPL.

4 450196 / 27 35985 5303152700106706675400000

Please request changes on the back.
Notes on the front will not be detected.

B 5,8 5303 0

#BWNDJNQ ***
#3519943BQ769122#
PASEO CDD
12750 CITRUS PARK LN STE 115
TAMPA FL 33625-3784

Make check payable to FPL in U.S. funds and mail along with this coupon to:

FPL
GENERAL MAIL FACILITY
MIAMI FL 33188-0001

Account number	Total amount you owe	New charges due by	Amount enclosed
15270-01067	**$457.66**	**Jul 24 2019**	**$**

Your electric statement

For: Jun 04 2019 to Jul 03 2019 (29 days)
Customer name: PASEO CDD
Service address: 11141 ESTEBAN DR # LF-A

Account number: 15270-01067

Statement date: Jul 03 2019
Next meter reading: Aug 03 2019

Amount of your last bill	Payments (-)	Additional activity (+ or -)	Balance before new charges (=)	New charges (+)	Total amount you owe (=)	New charges due by
500.19	500.19 CR	0.00	0.00	457.66	**$457.66**	**Jul 24 2019**

Meter reading - Meter ACD2824

Current reading	97409
Previous reading	- 92951
kWh used	**4458**

Energy usage

	Last Year	This Year
kWh this month	3642	4458
Service days	30	29
kWh per day	121	154

****The electric service amount includes the following charges:**

Customer charge:	$10.54
Fuel: *($0.025630 per kWh)*	$114.26
Non-fuel: *($0.065310 per kWh)*	$291.15

Enroll now in FPL Budget Billing by paying $359.85 in 1 payment by the due date instead of $457.66. Your bill will be about the same each month & stabilized year-round. Learn more at FPL.com/bb

Amount of your last bill		500.19
Payment received - Thank you		500.19 CR
Balance before new charges		$0.00
New charges (Rate: GS-1 GENERAL SVC NON-DEMAND / BUSINESS)		
Electric service amount	415.95**	
Storm charge	5.31	
Gross receipts tax	10.80	
Franchise charge	25.60	
Total new charges		$457.66

Total amount you owe **$457.66**

- Payment received after **September 26, 2019** is considered **LATE**; a late payment charge of **1%** will apply.
- The storm charge on your August bill will be removed to reflect final payment of bonds issued during the 2004 and 2005 hurricane restoration effort. There will be a true-up on a future bill, subject to Florida Public Service Commission approval. Learn more: FPL.com/rates.

Please have your account number ready when contacting FPL.
Customer service: 1-800-375-2434
Outside Florida: 1-800-226-3545

FPL.

5 450196 / 27 146443 53032377096140 3717710000

Please request changes on the back.
Notes on the front will not be detected.

B 5,8 5303

#BWNDJNQ ***
#3519943BQ769122#
PASEO CDD
C/O PASEO CDD
12750 CITRUS PARK LN STE 115
TAMPA FL 33625-3784

Make check payable to FPL in U.S. funds and mail along with this coupon to:

FPL
GENERAL MAIL FACILITY
MIAMI FL 33188-0001

Account number	Total amount you owe	New charges due by	Amount enclosed
23770-96140	**$1,771.73**	**Jul 24 2019**	**$**

Your electric statement

For: Jun 04 2019 to Jul 03 2019 (29 days)
Customer name: PASEO CDD
Service address: 8201 PENZANCE BLVD #WELL

Account number: 23770-96140

Statement date: Jul 03 2019
Next meter reading: Aug 03 2019

Amount of your last bill	Payments (-)	Additional activity (+ or -)	Balance before new charges (=)	New charges (+)	Total amount you owe (=)	New charges due by
1,898.03	1,898.03 CR	0.00	0.00	1,771.73	**$1,771.73**	**Jul 24 2019**

Meter reading - Meter KNJ7939

Current reading	57138
Previous reading	- 39660
kWh used	**17478**
Demand reading	64.68
Demand kW	**65**

Energy usage

	Last Year	This Year
kWh this month	13048	17478
Service days	30	29
kWh per day	434	602

****The electric service amount includes the following charges:**

Customer charge:	$26.32
Fuel: *($0.025630 per kWh)*	$447.96
Non-fuel: *($0.023490 per kWh)*	$410.56
Demand: *($11.24 per kW)*	$730.60

Enroll now in FPL Budget Billing by paying $1,464.43 in 1 payment by the due date instead of $1,771.73. Your bill will be about the same each month & stabilized year-round. Learn more at FPL.com/bb

Amount of your last bill		1,898.03
Payment received - Thank you		1,898.03 CR
Balance before new charges		$0.00
New charges (Rate: GSD-1 GENERAL SERVICE DEMAND)		
Electric service amount	1,615.44**	
Storm charge	15.38	
Gross receipts tax	41.82	
Franchise charge	99.09	
Total new charges		$1,771.73
Total amount you owe		**$1,771.73**

- Payment received after **September 26, 2019** is considered **LATE**; a late payment charge of **1%** will apply.
- The storm charge on your August bill will be removed to reflect final payment of bonds issued during the 2004 and 2005 hurricane restoration effort. There will be a true-up on a future bill, subject to Florida Public Service Commission approval. Learn more: FPL.com/rates.

Please have your account number ready when contacting FPL.
Customer service: 1-800-375-2434
Outside Florida: 1-800-226-3545
To report power outages: 1-800-4OUTAGE (468-8243)

FPL

6 450196 / 27

5303247435026715009600000

Please request changes on the back.
Notes on the front will not be detected.

B 5,8 5303 1

#BWNDJNQ ***
#3519943BQ769122#
PASEO CDD
12750 CITRUS PARK LN STE 115
TAMPA FL 33625-3784

Make check payable to FPL in U.S. funds and mail along with this coupon to:

FPL
GENERAL MAIL FACILITY
MIAMI FL 33188-0001

Account number	Total amount you owe	New charges due by	Amount enclosed
24743-50267	**$690.05**	**Jul 24 2019**	**$**

Your electric statement

For: Jun 04 2019 to Jul 03 2019 (29 days)
Customer name: PASEO CDD
Service address: 1 PASEO GRANDE BLVD # PUMPS

Account number: 24743-50267

Statement date: Jul 03 2019
Next meter reading: Aug 03 2019

Amount of your last bill	Payments (-)	Additional activity (+ or -)	Balance before new charges (=)	New charges (+)	Total amount you owe (=)	New charges due by
764.63	764.63 CR	0.00	0.00	690.05	**$690.05**	**Jul 24 2019**

Meter reading - Meter KN76510

Current reading	94712
Previous reading	- 87932
kWh used	**6780**

Energy usage

	Last Year	This Year
kWh this month	7976	6780
Service days	30	29
kWh per day	265	233

****The electric service amount includes the following charges:**

Customer charge:	$10.54
Fuel: *($0.025630 per kWh)*	$173.77
Non-fuel: *($0.065310 per kWh)*	$442.79

Amount of your last bill		764.63
Payment received - Thank you		764.63 CR
Balance before new charges		$0.00
New charges (Rate: GS-1 GENERAL SVC NON-DEMAND / BUSINESS)		
Electric service amount	627.10**	
Storm charge	8.07	
Gross receipts tax	16.29	
Franchise charge	38.59	
Total new charges		$690.05

Total amount you owe **$690.05**

- Payment received after **September 26, 2019** is considered **LATE**; a late payment charge of **1%** will apply.
- The storm charge on your August bill will be removed to reflect final payment of bonds issued during the 2004 and 2005 hurricane restoration effort. There will be a true-up on a future bill, subject to Florida Public Service Commission approval. Learn more: FPL.com/rates.

Please have your account number ready when contacting FPL.
Customer service: 1-800-375-2434
Outside Florida: 1-800-226-3545
To report power outages: 1-800-4OUTAGE (468-8243)

/ 27 5303256333220073811100000

FPL
GENERAL MAIL FACILITY
MIAMI FL 33188-0001

PASEO CDD
12750 CITRUS PARK LN STE 115
TAMPA FL 33625-3784

PASEO CDD:
Here's what you owe for this billing period.

Amount of your last bill	**$126.06**
Payments	**-$126.06**
New charges due by Jul 26, 2019	**$111.83**
Total amount you owe	**$111.83**

Amount of your last bill		126.06
Payment received - Thank you		−126.06
Balance before new charges		**$0.00**
NEW CHARGES		
Rate: GS-1 GENERAL SVC NON-DEMAND / BUSINESS		
Customer charge:	$10.54	
Non-fuel: ($0.065310 per kWh)	$65.50	
Fuel: ($0.025630 per kWh)	$25.71	
Electric service amount	**101.75**	
Storm charge	1.19	
Gross receipts tax	2.64	
Franchise charge	6.25	
Taxes and charges	**10.08**	
Total new charges		**$111.83**
Total amount you owe		**$111.83**

Jul 3, 2019 Electric Bill

For: Jun 4, 2019 to Jul 3, 2019 (29 days)
Service Address
11803 NALDA ST # SL
FORT MYERS, FL 33912
CDDINVOICE@RIZZETTA.COM
Account Number 25633-32200

Questions? Contact Us
Reliable energy is affordable energy.
Learn how we save you money at fpl.com/savings

Meter Summary

Meter reading - Meter KN76511 Next meter reading Aug 3, 2019

Current reading	61335
Previous reading	-60332
kWh used	1003

Energy Usage Comparison

	This Month	Last Month	Last Year
Service to	Jul 3, 2019	Jun 4, 2019	Jul 5, 2018
kWh Used	1003	1234	5839
Service days	29	32	30
kWh/day	34	38	194
Amount	$111.83	$134.97	$580.74

Energy Usage History

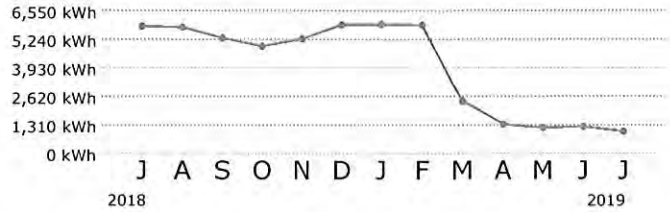

Keep In Mind

- Payment received after September 27, 2019 is considered LATE; a late payment charge of 1% will apply.
- The storm charge on your August bill will be removed to reflect final payment of bonds issued during the 2004 and 2005 hurricane restoration effort. There will be a true-up on a future bill, subject to Florida Public Service Commission approval. Learn more: FPL.com/rates.

Preventing outages in a flash

July is the peak of lightning season. See what we're doing to prevent this natural phenomenon from causing interruptions.
Learn more

Hassle-free solar option

With no upfront costs, contracts or installation, FPL SolarTogether is an easy and affordable solar alternative.
Learn how

Don't let the summer heat up your bill

During the summer your A/C works harder. Set your thermostat to 78°F to save money.
Ways to save

Useful Links
Billing and service details
Energy News
View back of the bill

Important Numbers

Customer Service:	1-800-375-2434
Outside Florida:	1-800-226-3545
To report power outages:	1-800-4OUTAGE (468-8243)
Hearing/speech impaired:	711 (Relay Service)

FPL.

7 450196 / 27 89266 530327060670362541101000 0

Please request changes on the back.
Notes on the front will not be detected.

B 5,8 5303 2

#BWNDJNQ ***
#3519943BQ769122#
PASEO CDD
12750 CITRUS PARK LN STE 115
TAMPA FL 33625-3784

Make check payable to FPL in U.S. funds and mail along with this coupon to:

FPL
GENERAL MAIL FACILITY
MIAMI FL 33188-0001

Account number	Total amount you owe	New charges due by	Amount enclosed
27060-67036	**$1,011.45**	**Jul 24 2019**	**$**

Your electric statement

For: Jun 04 2019 to Jul 03 2019 (29 days)
Customer name: PASEO CDD
Service address: 9101 PENZANCE BLVD # FNTN

Account number: 27060-67036

Statement date: Jul 03 2019
Next meter reading: Aug 03 2019

Amount of your last bill	Payments (-)	Additional activity (+ or -)	Balance before new charges (=)	New charges (+)	Total amount you owe (=)	New charges due by
1,049.15	1,049.15 CR	0.00	0.00	1,011.45	**$1,011.45**	**Jul 24 2019**

Meter reading - Meter KN76513

Current reading	10231
Previous reading	- 97982
kWh used	**12249**
Demand reading	25.72
Demand kW	**26**

Energy usage

	Last Year	This Year
kWh this month	12811	12249
Service days	30	29
kWh per day	427	422

****The electric service amount includes the following charges:**

Customer charge:	$26.32
Fuel: *($0.025630 per kWh)*	$313.94
Non-fuel: *($0.023490 per kWh)*	$287.73
Demand: *($11.24 per kW)*	$292.24

Enroll now in FPL Budget Billing by paying $892.66 in 1 payment by the due date instead of $1,011.45. Your bill will be about the same each month & stabilized year-round. Learn more at FPL.com/bb

Amount of your last bill		1,049.15
Payment received - Thank you		1,049.15 CR
Balance before new charges		$0.00
New charges (Rate: GSD-1 GENERAL SERVICE DEMAND)		
Electric service amount	920.23**	
Storm charge	10.78	
Gross receipts tax	23.87	
Franchise charge	56.57	
Total new charges		$1,011.45
Total amount you owe		**$1,011.45**

- Payment received after **September 26, 2019** is considered **LATE**; a late payment charge of **1%** will apply.
- The storm charge on your August bill will be removed to reflect final payment of bonds issued during the 2004 and 2005 hurricane restoration effort. There will be a true-up on a future bill, subject to Florida Public Service Commission approval. Learn more: FPL.com/rates.

Please have your account number ready when contacting FPL.
Customer service: 1-800-375-2434
Outside Florida: 1-800-226-3545
To report power outa[illegible]

FPL

8 450196 / 27 5303279002018035181100000

Please request changes on the back.
Notes on the front will not be detected.

B 5,8 5303 3

#BWNDJNQ ***
#3519943BQ769122#
PASEO CDD
12750 CITRUS PARK LN STE 115
TAMPA FL 33625-3784

Make check payable to FPL in U.S. funds and mail along with this coupon to:

FPL
GENERAL MAIL FACILITY
MIAMI FL 33188-0001

Account number	Total amount you owe	New charges due by	Amount enclosed
27900-20180	**$118.15**	**Jul 24 2019**	**$**

Your electric statement

For: Jun 04 2019 to Jul 03 2019 (29 days)
Customer name: PASEO CDD
Service address: 11030 ESTEBAN DR # SL

Account number: 27900-20180

Statement date: Jul 03 2019
Next meter reading: Aug 03 2019

Amount of your last bill	Payments (-)	Additional activity (+ or -)	Balance before new charges (=)	New charges (+)	Total amount you owe (=)	New charges due by
132.26	132.26 CR	0.00	0.00	118.15	**$118.15**	**Jul 24 2019**

Meter reading - Meter AC92937

Current reading	07696
Previous reading	- 06630
kWh used	**1066**

Energy usage

	Last Year	This Year
kWh this month	2042	1066
Service days	30	29
kWh per day	68	37

****The electric service amount includes the following charges:**

Customer charge:	$10.54
Fuel: *($0.025630 per kWh)*	$27.32
Non-fuel: *($0.065310 per kWh)*	$69.62

Amount of your last bill		132.26
Payment received - Thank you		132.26 CR
Balance before new charges		$0.00
New charges (Rate: GS-1 GENERAL SVC NON-DEMAND / BUSINESS)		
Electric service amount	107.48**	
Storm charge	1.27	
Gross receipts tax	2.79	
Franchise charge	6.61	
Total new charges		$118.15

Total amount you owe **$118.15**

- Payment received after **September 26, 2019** is considered **LATE**; a late payment charge of **1%** will apply.
- The storm charge on your August bill will be removed to reflect final payment of bonds issued during the 2004 and 2005 hurricane restoration effort. There will be a true-up on a future bill, subject to Florida Public Service Commission approval. Learn more: FPL.com/rates.

Please have your account number ready when contacting FPL.
Customer service: 1-800-375-2434
Outside Florida: 1-800-226-3545

FPL

9 450196 / 27

5303281471850475812200000

Please request changes on the back.
Notes on the front will not be detected.

B 5,8 5303 7

#BWNDJNQ ***
#3519943BQ769122#
PASEO CDD
12750 CITRUS PARK LN STE 115
TAMPA FL 33625-3784

Make check payable to FPL in U.S. funds and mail along with this coupon to:

FPL
GENERAL MAIL FACILITY
MIAMI FL 33188-0001

Account number	Total amount you owe	New charges due by	Amount enclosed
28147-18504	**$221.85**	**Jul 24 2019**	**$**

Your electric statement

For: Jun 04 2019 to Jul 03 2019 (29 days)
Customer name: PASEO CDD
Service address: 11812 NALDA ST # FNTN

Account number: 28147-18504

Statement date: Jul 03 2019
Next meter reading: Aug 03 2019

Amount of your last bill	Payments (-)	Additional activity (+ or -)	Balance before new charges (=)	New charges (+)	Total amount you owe (=)	New charges due by
243.05	243.05 CR	0.00	0.00	221.85	**$221.85**	**Jul 24 2019**

Meter reading - Meter KN94729

Current reading	95621
Previous reading	- 93519
kWh used	**2102**

Energy usage

	Last Year	This Year
kWh this month	2152	2102
Service days	30	29
kWh per day	71	72

****The electric service amount includes the following charges:**

Customer charge:	$10.54
Fuel: *($0.025630 per kWh)*	$53.87
Non-fuel: *($0.065310 per kWh)*	$137.28

Amount of your last bill		243.05
Payment received - Thank you		243.05 CR
Balance before new charges		$0.00
New charges (Rate: GS-1 GENERAL SVC NON-DEMAND / BUSINESS)		
Electric service amount	201.69**	
Storm charge	2.51	
Gross receipts tax	5.24	
Franchise charge	12.41	
Total new charges		$221.85

Total amount you owe **$221.85**

- Payment received after **September 26, 2019** is considered **LATE**; a late payment charge of **1%** will apply.
- The storm charge on your August bill will be removed to reflect final payment of bonds issued during the 2004 and 2005 hurricane restoration effort. There will be a true-up on a future bill, subject to Florida Public Service Commission approval. Learn more: FPL.com/rates.

Please have your account number ready when contacting FPL.
Customer service: 1-800-375-2434
Outside Florida: 1-800-226-3545
To report

FPL.

10 450196 / 27

5303284679126307483000000

Please request changes on the back.
Notes on the front will not be detected.

B 5,8 5303 0

#BWNDJNQ ***
#3519943BQ769122#
PASEO CDD
12750 CITRUS PARK LN STE 115
TAMPA FL 33625-3784

Make check payable to FPL in U.S. funds and mail along with this coupon to:

FPL
GENERAL MAIL FACILITY
MIAMI FL 33188-0001

Account number	Total amount you owe	New charges due by	Amount enclosed
28467-91263	**$38.47**	**Jul 24 2019**	**$**

Your electric statement

For: Jun 04 2019 to Jul 03 2019 (29 days)
Customer name: PASEO CDD
Service address: 11170 PASEO DR # SL

Account number: 28467-91263

Statement date: Jul 03 2019
Next meter reading: Aug 03 2019

Amount of your last bill	Payments (-)	Additional activity (+ or -)	Balance before new charges (=)	New charges (+)	Total amount you owe (=)	New charges due by
37.82	37.82 CR	0.00	0.00	38.47	**$38.47**	**Jul 24 2019**

Meter reading - Meter AC01174

Current reading	25064
Previous reading	- 24794
kWh used	**270**

Energy usage

	Last Year	This Year
kWh this month	987	270
Service days	30	29
kWh per day	33	9

****The electric service amount includes the following charges:**

Customer charge:	$10.54
Fuel: *($0.025630 per kWh)*	$6.92
Non-fuel: *($0.065310 per kWh)*	$17.63

Amount of your last bill		37.82
Payment received - Thank you		37.82 CR
Balance before new charges		$0.00
New charges (Rate: GS-1 GENERAL SVC NON-DEMAND / BUSINESS)		
Electric service amount	35.09**	
Storm charge	0.32	
Gross receipts tax	0.91	
Franchise charge	2.15	
Total new charges		$38.47

Total amount you owe **$38.47**

- Payment received after **September 26, 2019** is considered **LATE**; a late payment charge of **1%** will apply.
- The storm charge on your August bill will be removed to reflect final payment of bonds issued during the 2004 and 2005 hurricane restoration effort. There will be a true-up on a future bill, subject to Florida Public Service Commission approval. Learn more: FPL.com/rates.

Please have your account number ready when contacting FPL.
Customer service: 1-800-375-2434
Outside Florida: 1-800-226-3545
To report power outages: 1-800-4OUTAGE

FPL.

11 450196 / 27

5303423477006528045200000

Please request changes on the back.
Notes on the front will not be detected.

B 5,8 5303 2

#BWNDJNQ ***
#3519943BQ769122#
PASEO CDD
12750 CITRUS PARK LN STE 115
TAMPA FL 33625-3784

Make check payable to FPL in U.S. funds and mail along with this coupon to:

FPL
GENERAL MAIL FACILITY
MIAMI FL 33188-0001

Account number	Total amount you owe	New charges due by	Amount enclosed
42347-70065	**$254.08**	**Jul 24 2019**	**$**

Your electric statement

For: Jun 04 2019 to Jul 03 2019 (29 days)
Customer name: PASEO CDD
Service address: 8303 ADELIO LN # LF-E

Account number: 42347-70065

Statement date: Jul 03 2019
Next meter reading: Aug 03 2019

Amount of your last bill	Payments (-)	Additional activity (+ or -)	Balance before new charges (=)	New charges (+)	Total amount you owe (=)	New charges due by
277.09	277.09 CR	0.00	0.00	254.08	**$254.08**	**Jul 24 2019**

Meter reading - Meter ACD3117

Current reading	18931
Previous reading	- 16507
kWh used	**2424**

Energy usage

	Last Year	This Year
kWh this month	2487	2424
Service days	30	29
kWh per day	83	84

****The electric service amount includes the following charges:**

Customer charge:	$10.54
Fuel: *($0.025630 per kWh)*	$62.13
Non-fuel: *($0.065310 per kWh)*	$158.32

Amount of your last bill	277.09
Payment received - Thank you	277.09 CR
Balance before new charges	$0.00

New charges (Rate: GS-1 GENERAL SVC NON-DEMAND / BUSINESS)

Electric service amount	230.99**	
Storm charge	2.88	
Gross receipts tax	6.00	
Franchise charge	14.21	
Total new charges		$254.08

Total amount you owe **$254.08**

- Payment received after **September 26, 2019** is considered **LATE**; a late payment charge of **1%** will apply.
- The storm charge on your August bill will be removed to reflect final payment of bonds issued during the 2004 and 2005 hurricane restoration effort. There will be a true-up on a future bill, subject to Florida Public Service Commission approval. Learn more: FPL.com/rates.

Please have your account number ready when contacting FPL.
Customer service: 1-800-375-2434
Outside Florida: 1-800-226-3545
To report power outages: 1-800-4OUTAGE

FPL

12 450196 / 27

5303446164251657333000000

Please request changes on the back.
Notes on the front will not be detected.

B 5,8 5303 5

#BWNDJNQ ***
#3519943BQ769122#
PASEO CDD
12750 CITRUS PARK LN STE 115
TAMPA FL 33625-3784

Make check payable to FPL in U.S. funds and mail along with this coupon to:

FPL
GENERAL MAIL FACILITY
MIAMI FL 33188-0001

Account number	Total amount you owe	New charges due by	Amount enclosed
44616-42516	**$33.37**	**Jul 24 2019**	**$**

Your electric statement

For: Jun 04 2019 to Jul 03 2019 (29 days)
Customer name: PASEO CDD
Service address: 11604 PASEO GRANDE BLVD # TRASH

Account number: 44616-42516

Statement date: Jul 03 2019
Next meter reading: Aug 03 2019

Amount of your last bill	Payments (-)	Additional activity (+ or -)	Balance before new charges (=)	New charges (+)	Total amount you owe (=)	New charges due by
34.37	34.37 CR	0.00	0.00	33.37	**$33.37**	**Jul 24 2019**

Meter reading - Meter KJ47693

Current reading	07638
Previous reading	- 07419
kWh used	**219**

Energy usage

	Last Year	This Year
kWh this month	212	219
Service days	30	29
kWh per day	7	7

****The electric service amount includes the following charges:**

Customer charge:	$10.54
Fuel: *($0.025630 per kWh)*	$5.61
Non-fuel: *($0.065310 per kWh)*	$14.30

Amount of your last bill	34.37
Payment received - Thank you	34.37 CR
Balance before new charges	$0.00

New charges (Rate: GS-1 GENERAL SVC NON-DEMAND / BUSINESS)

Electric service amount	30.45**	
Storm charge	0.26	
Gross receipts tax	0.79	
Franchise charge	1.87	
Total new charges		$33.37

Total amount you owe **$33.37**

- Payment received after **September 26, 2019** is considered **LATE**; a late payment charge of **1%** will apply.
- The storm charge on your August bill will be removed to reflect final payment of bonds issued during the 2004 and 2005 hurricane restoration effort. There will be a true-up on a future bill, subject to Florida Public Service Commission approval. Learn more: FPL.com/rates.

Please have your account number ready when contacting FPL.
Customer service: 1-800-375-2434
Outside Florida: 1-800-226-3545

FPL.

13 450196 / 27

5303454466947846362000000

Please request changes on the back.
Notes on the front will not be detected.

B 5,8 5303 4

#BWNDJNQ ***
#3519943BQ769122#
PASEO CDD
12750 CITRUS PARK LN STE 115
TAMPA FL 33625-3784

Make check payable to FPL in U.S. funds and mail along with this coupon to:

FPL
GENERAL MAIL FACILITY
MIAMI FL 33188-0001

Account number	Total amount you owe	New charges due by	Amount enclosed
45446-69478	**$26.36**	**Jul 24 2019**	**$**

Your electric statement

For: Jun 04 2019 to Jul 03 2019 (29 days)
Customer name: PASEO CDD
Service address: 8366 DARIO WAY # SL-2

Account number: 45446-69478

Statement date: Jul 03 2019
Next meter reading: Aug 03 2019

Amount of your last bill	Payments (-)	Additional activity (+ or -)	Balance before new charges (=)	New charges (+)	Total amount you owe (=)	New charges due by
27.76	27.76 CR	0.00	0.00	26.36	**$26.36**	**Jul 24 2019**

Meter reading - Meter ACD3090

Current reading	68656
Previous reading	- 68507
kWh used	**149**

Energy usage

	Last Year	This Year
kWh this month	735	149
Service days	30	29
kWh per day	25	5

****The electric service amount includes the following charges:**

Customer charge:	$10.54
Fuel: *($0.025630 per kWh)*	$3.82
Non-fuel: *($0.065310 per kWh)*	$9.73

Amount of your last bill	27.76
Payment received - Thank you	27.76CR
Balance before new charges	$0.00

New charges (Rate: GS-1 GENERAL SVC NON-DEMAND / BUSINESS)

Electric service amount	24.09**	
Storm charge	0.18	
Gross receipts tax	0.62	
Franchise charge	1.47	
Total new charges		$26.36

Total amount you owe **$26.36**

- Payment received after **September 26, 2019** is considered **LATE**; a late payment charge of **1%** will apply.
- The storm charge on your August bill will be removed to reflect final payment of bonds issued during the 2004 and 2005 hurricane restoration effort. There will be a true-up on a future bill, subject to Florida Public Service Commission approval. Learn more: FPL.com/rates.

Please have your account number ready when contacting FPL.
Customer service: 1-800-375-2434
Outside Florida: 1-800-226-3545

FPL

14 450196 / 27 5303510724106 8 4202300000

Please request changes on the back.
Notes on the front will not be detected.

B 5,8 5303

#BWNDJNQ ***
#3519943BQ769122#
PASEO CDD
12750 CITRUS PARK LN STE 115
TAMPA FL 33625-3784

Make check payable to FPL in U.S. funds and mail along with this coupon to:

FPL
GENERAL MAIL FACILITY
MIAMI FL 33188-0001

Account number	Total amount you owe	New charges due by	Amount enclosed
51072-41068	**$320.24**	**Jul 24 2019**	**$**

Your electric statement

For: Jun 04 2019 to Jul 03 2019 (29 days)
Customer name: PASEO CDD
Service address: 11141 ESTEBAN DR # LF-C

Account number: 51072-41068

Statement date: Jul 03 2019
Next meter reading: Aug 03 2019

Amount of your last bill	Payments (-)	Additional activity (+ or -)	Balance before new charges (=)	New charges (+)	Total amount you owe (=)	New charges due by
358.87	358.87 CR	0.00	0.00	320.24	**$320.24**	**Jul 24 2019**

Meter reading - Meter ACD3137

Current reading	50552
Previous reading	- 47467
kWh used	**3085**

Energy usage

	Last Year	This Year
kWh this month	1947	3085
Service days	30	29
kWh per day	65	106

****The electric service amount includes the following charges:**

Customer charge:	$10.54
Fuel: *($0.025630 per kWh)*	$79.07
Non-fuel: *($0.065310 per kWh)*	$201.49

Amount of your last bill		358.87
Payment received - Thank you		358.87 CR
Balance before new charges		$0.00
New charges (Rate: GS-1 GENERAL SVC NON-DEMAND / BUSINESS)		
Electric service amount	291.10**	
Storm charge	3.67	
Gross receipts tax	7.56	
Franchise charge	17.91	
Total new charges		$320.24

Total amount you owe **$320.24**

- Payment received after **September 26, 2019** is considered **LATE**; a late payment charge of **1%** will apply.
- The storm charge on your August bill will be removed to reflect final payment of bonds issued during the 2004 and 2005 hurricane restoration effort. There will be a true-up on a future bill, subject to Florida Public Service Commission approval. Learn more: FPL.com/rates.

Please have your account number ready when contacting FPL.
Customer service: 1-800-375-2434
Outside Florida: 1-800-226-3545

FPL.

15 450196 / 27 5303528961548533073300000

Please request changes on the back.
Notes on the front will not be detected.

B 5,8 5303 3

#BWNDJNQ ***
#3519943BQ769122#
PASEO CDD
12750 CITRUS PARK LN STE 115
TAMPA FL 33625-3784

Make check payable to FPL in U.S. funds and mail along with this coupon to:

FPL
GENERAL MAIL FACILITY
MIAMI FL 33188-0001

Account number	Total amount you owe	New charges due by	Amount enclosed
52896-15485	**$337.03**	**Jul 24 2019**	**$**

Your electric statement

For: Jun 04 2019 to Jul 03 2019 (29 days)
Customer name: PASEO CDD
Service address: 8307 BIBIANA WAY # SL

Account number: 52896-15485

Statement date: Jul 03 2019
Next meter reading: Aug 03 2019

Amount of your last bill	Payments (-)	Additional activity (+ or -)	Balance before new charges (=)	New charges (+)	Total amount you owe (=)	New charges due by
369.17	369.17 CR	0.00	0.00	337.03	**$337.03**	**Jul 24 2019**

Meter reading - Meter KNJ7966

Current reading	71210
Previous reading	- 67957
kWh used	**3253**

Energy usage

	Last Year	This Year
kWh this month	6232	3253
Service days	30	29
kWh per day	207	112

****The electric service amount includes the following charges:**

Customer charge:	$10.54
Fuel: *($0.025630 per kWh)*	$83.37
Non-fuel: *($0.065310 per kWh)*	$212.45

Amount of your last bill		369.17
Payment received - Thank you		369.17 CR
Balance before new charges		$0.00

New charges (Rate: GS-1 GENERAL SVC NON-DEMAND / BUSINESS)

Electric service amount	306.36**	
Storm charge	3.87	
Gross receipts tax	7.95	
Franchise charge	18.85	
Total new charges		$337.03

Total amount you owe **$337.03**

- Payment received after **September 26, 2019** is considered **LATE**; a late payment charge of **1%** will apply.
- The storm charge on your August bill will be removed to reflect final payment of bonds issued during the 2004 and 2005 hurricane restoration effort. There will be a true-up on a future bill, subject to Florida Public Service Commission approval. Learn more: FPL.com/rates.

Please have your account number ready when contacting FPL.
Customer service: 1-800-375-2434
Outside Florida: 1-800-226-3545
To report power outages: 1-800-4OUTAGE (468-8243)

FPL

16 450196 / 27

5303536890740777211900000

Please request changes on the back.
Notes on the front will not be detected.

B 5,8 5303 7

#BWNDJNQ ***
#3519943BQ769122#
PASEO CDD
12750 CITRUS PARK LN STE 115
TAMPA FL 33625-3784

Make check payable to FPL in U.S. funds and mail along with this coupon to:

FPL
GENERAL MAIL FACILITY
MIAMI FL 33188-0001

Account number	Total amount you owe	New charges due by	Amount enclosed
53689-07407	**$911.27**	**Jul 24 2019**	**$**

Your electric statement

For: Jun 04 2019 to Jul 03 2019 (29 days)
Customer name: PASEO CDD
Service address: 8307 BIBIANA WAY # FNTN

Account number: 53689-07407

Statement date: Jul 03 2019
Next meter reading: Aug 03 2019

Amount of your last bill	Payments (-)	Additional activity (+ or -)	Balance before new charges (=)	New charges (+)	Total amount you owe (=)	New charges due by
969.45	969.45 CR	0.00	0.00	911.27	**$911.27**	**Jul 24 2019**

Meter reading - Meter KN49807

Current reading	39277
Previous reading	- 29097
kWh used	**10180**
Demand reading	27.19
Demand kW	**27**

Energy usage

	Last Year	This Year
kWh this month	10103	10180
Service days	30	29
kWh per day	336	351

****The electric service amount includes the following charges:**

Customer charge:	$26.32
Fuel: *($0.025630 per kWh)*	$260.91
Non-fuel: *($0.023490 per kWh)*	$239.13
Demand: *($11.24 per kW)*	$303.48

Amount of your last bill		969.45
Payment received - Thank you		969.45 CR
Balance before new charges		$0.00
New charges (Rate: GSD-1 GENERAL SERVICE DEMAND)		
Electric service amount	829.84**	
Storm charge	8.96	
Gross receipts tax	21.51	
Franchise charge	50.96	
Total new charges		$911.27

Total amount you owe **$911.27**

- Payment received after **September 26, 2019** is considered **LATE**; a late payment charge of **1%** will apply.
- The storm charge on your August bill will be removed to reflect final payment of bonds issued during the 2004 and 2005 hurricane restoration effort. There will be a true-up on a future bill, subject to Florida Public Service Commission approval. Learn more: FPL.com/rates.

Please have your account number ready when contacting FPL.
Customer service: 1-800-375-2434
Outside Florida: 1-800-226-3545

FPL

18 450196 / 27 5303607028947286592000000

Please request changes on the back.
Notes on the front will not be detected.

B 5,8 5303 8

#BWNDJNQ ***
#3519943BQ769122#
PASEO CDD
12750 CITRUS PARK LN STE 115
TAMPA FL 33625-3784

Make check payable to FPL in U.S. funds and mail along with this coupon to:

FPL
GENERAL MAIL FACILITY
MIAMI FL 33188-0001

Account number	Total amount you owe	New charges due by	Amount enclosed
60702-89472	**$29.56**	**Jul 24 2019**	**$**

Your electric statement

For: Jun 04 2019 to Jul 03 2019 (29 days)
Customer name: PASEO CDD
Service address: 11060 ESTEBAN DR # SL-3

Account number: 60702-89472

Statement date: Jul 03 2019
Next meter reading: Aug 03 2019

Amount of your last bill	Payments (-)	Additional activity (+ or -)	Balance before new charges (=)	New charges (+)	Total amount you owe (=)	New charges due by
31.47	31.47 CR	0.00	0.00	29.56	**$29.56**	**Jul 24 2019**

Meter reading - Meter ACD2851

Current reading	86640
Previous reading	- 86459
kWh used	**181**

Energy usage

	Last Year	This Year
kWh this month	858	181
Service days	30	29
kWh per day	29	6

****The electric service amount includes the following charges:**

Customer charge:	$10.54
Fuel: *($0.025630 per kWh)*	$4.64
Non-fuel: *($0.065310 per kWh)*	$11.82

Amount of your last bill		31.47
Payment received - Thank you		31.47 CR
Balance before new charges		$0.00
New charges (Rate: GS-1 GENERAL SVC NON-DEMAND / BUSINESS)		
Electric service amount	27.00**	
Storm charge	0.21	
Gross receipts tax	0.70	
Franchise charge	1.65	
Total new charges		$29.56

Total amount you owe **$29.56**

- Payment received after **September 26, 2019** is considered **LATE**; a late payment charge of **1%** will apply.
- The storm charge on your August bill will be removed to reflect final payment of bonds issued during the 2004 and 2005 hurricane restoration effort. There will be a true-up on a future bill, subject to Florida Public Service Commission approval. Learn more: FPL.com/rates.

Please have your account number ready when contacting FPL.
Customer service: 1-800-375-2434
Outside Florida: 1-800-226-3545
To report power outages: 1-800-4OUTAGE (468-8243)

FPL

19 450196 / 27 5303662802752317282000000

Please request changes on the back.
Notes on the front will not be detected.

B 5,8 5303 1

#BWNDJNQ ***
#3519943BQ769122#
PASEO CDD
12750 CITRUS PARK LN STE 115
TAMPA FL 33625-3784

Make check payable to FPL in U.S. funds and mail along with this coupon to:

FPL
GENERAL MAIL FACILITY
MIAMI FL 33188-0001

Account number	Total amount you owe	New charges due by	Amount enclosed
66280-27523	**$28.27**	**Jul 24 2019**	**$**

Your electric statement

For: Jun 04 2019 to Jul 03 2019 (29 days)
Customer name: PASEO CDD
Service address: 8201 PENZANCE BLVD # SL

Account number: 66280-27523

Statement date: Jul 03 2019
Next meter reading: Aug 03 2019

Amount of your last bill	Payments (-)	Additional activity (+ or -)	Balance before new charges (=)	New charges (+)	Total amount you owe (=)	New charges due by
21.47	21.47 CR	0.00	0.00	28.27	**$28.27**	**Jul 24 2019**

Meter reading - Meter ACD8024

Current reading	60428
Previous reading	- 60260
kWh used	**168**

Energy usage

	Last Year	This Year
kWh this month	182	168
Service days	30	29
kWh per day	6	6

****The electric service amount includes the following charges:**

Customer charge:	$10.54
Fuel: *($0.025630 per kWh)*	$4.31
Non-fuel: *($0.065310 per kWh)*	$10.97

Amount of your last bill		21.47
Payment received - Thank you		21.47 CR
Balance before new charges		$0.00
New charges (Rate: GS-1 GENERAL SVC NON-DEMAND / BUSINESS)		
Electric service amount	25.82**	
Storm charge	0.20	
Gross receipts tax	0.67	
Franchise charge	1.58	
Total new charges		$28.27
Total amount you owe		**$28.27**

- Payment received after **September 26, 2019** is considered **LATE**; a late payment charge of **1%** will apply.
- The storm charge on your August bill will be removed to reflect final payment of bonds issued during the 2004 and 2005 hurricane restoration effort. There will be a true-up on a future bill, subject to Florida Public Service Commission approval. Learn more: FPL.com/rates.

Please have your account number ready when contacting FPL.
Customer service: 1-800-375-2434
Outside Florida: 1-800-226-3545

FPL

20 450196 / 27 5303666890045645332100000

Please request changes on the back.
Notes on the front will not be detected.

B 5,8 5303 4

#BWNDJNQ ***
#3519943BQ769122#
PASEO CDD
12750 CITRUS PARK LN STE 115
TAMPA FL 33625-3784

Make check payable to FPL in U.S. funds and mail along with this coupon to:

FPL
GENERAL MAIL FACILITY
MIAMI FL 33188-0001

Account number	Total amount you owe	New charges due by	Amount enclosed
66689-00456	**$123.35**	**Jul 24 2019**	**$**

Your electric statement

For: Jun 04 2019 to Jul 03 2019 (29 days)
Customer name: PASEO CDD
Service address: 11964 TULIO WAY # SL

Account number: 66689-00456

Statement date: Jul 03 2019
Next meter reading: Aug 03 2019

Amount of your last bill	Payments (-)	Additional activity (+ or -)	Balance before new charges (=)	New charges (+)	Total amount you owe (=)	New charges due by
138.45	138.45 CR	0.00	0.00	123.35	**$123.35**	**Jul 24 2019**

Meter reading - Meter KN76524

Current reading	29890
Previous reading	- 28772
kWh used	**1118**

Energy usage

	Last Year	This Year
kWh this month	3884	1118
Service days	30	29
kWh per day	129	38

****The electric service amount includes the following charges:**

Customer charge:	$10.54
Fuel:	$28.65
($0.025630 per kWh)	
Non-fuel:	$73.02
($0.065310 per kWh)	

Amount of your last bill		138.45
Payment received - Thank you		138.45 CR
Balance before new charges		$0.00

New charges (Rate: GS-1 GENERAL SVC NON-DEMAND / BUSINESS)

Electric service amount	112.21**	
Storm charge	1.33	
Gross receipts tax	2.91	
Franchise charge	6.90	
Total new charges		$123.35

Total amount you owe **$123.35**

- Payment received after **September 26, 2019** is considered **LATE**; a late payment charge of **1%** will apply.
- The storm charge on your August bill will be removed to reflect final payment of bonds issued during the 2004 and 2005 hurricane restoration effort. There will be a true-up on a future bill, subject to Florida Public Service Commission approval. Learn more: FPL.com/rates.

Please have your account number ready when contacting FPL.
Customer service: 1-800-375-2434
Outside Florida: 1-800-226-3545

FPL.

21 450196 / 27

5303678031659926821000000

Please request changes on the back.
Notes on the front will not be detected.

B 5,8 5303 2

#BWNDJNQ ***
#3519943BQ769122#
PASEO CDD
12750 CITRUS PARK LN STE 115
TAMPA FL 33625-3784

Make check payable to FPL in U.S. funds and mail along with this coupon to:

FPL
GENERAL MAIL FACILITY
MIAMI FL 33188-0001

Account number	Total amount you owe	New charges due by	Amount enclosed
67803-16599	**$12.86**	**Jul 24 2019**	**$**

Your electric statement

For: Jun 04 2019 to Jul 03 2019 (29 days)
Customer name: PASEO CDD
Service address: 8446 OLINDA WAY #IRR

Account number: 67803-16599

Statement date: Jul 03 2019
Next meter reading: Aug 03 2019

Amount of your last bill	Payments (-)	Additional activity (+ or -)	Balance before new charges (=)	New charges (+)	Total amount you owe (=)	New charges due by
12.86	12.86 CR	0.00	0.00	12.86	**$12.86**	**Jul 24 2019**

Meter reading - Meter KCD4037

Current reading	00728
Previous reading	- 00714
kWh used	**14**

Energy usage

	Last Year	This Year
kWh this month	15	14
Service days	30	29
kWh per day	0	0

****The electric service amount includes the following charges:**

Customer charge:	$10.54
Fuel: *($0.025630 per kWh)*	$0.36
Non-fuel: *($0.065310 per kWh)*	$0.92

Amount of your last bill		12.86
Payment received - Thank you		12.86CR
Balance before new charges		$0.00
New charges (Rate: GS-1 GENERAL SVC NON-DEMAND / BUSINESS)		
Electric service amount	11.82**	
Storm charge	0.02	
Gross receipts tax	0.30	
Franchise charge	0.72	
Total new charges		$12.86

Total amount you owe **$12.86**

- Payment received after **September 26, 2019** is considered **LATE**; a late payment charge of **1%** will apply.
- The storm charge on your August bill will be removed to reflect final payment of bonds issued during the 2004 and 2005 hurricane restoration effort. There will be a true-up on a future bill, subject to Florida Public Service Commission approval. Learn more: FPL.com/rates.

Please have your account number ready when contacting FPL.
Customer service: 1-800-375-2434
Outside Florida: 1-800-226-3545
To report power outages: 1-800-4OUTAGE (468-8243)

FPL.

22 450196 / 27 5303730700529390776000000

Please request changes on the back.
Notes on the front will not be detected.

B 5,8 5303 9

#BWNDJNQ ***
#3519943BQ769122#
PASEO CDD
12750 CITRUS PARK LN STE 115
TAMPA FL 33625-3784

Make check payable to FPL in U.S. funds and mail along with this coupon to:

FPL
GENERAL MAIL FACILITY
MIAMI FL 33188-0001

Account number	Total amount you owe	New charges due by	Amount enclosed
73070-05293	**$67.70**	**Jul 24 2019**	**$**

Your electric statement

For: Jun 04 2019 to Jul 03 2019 (29 days)
Customer name: PASEO CDD
Service address: 11442 PASEO GRANDE BLVD # SL

Account number: 73070-05293

Statement date: Jul 03 2019
Next meter reading: Aug 03 2019

Amount of your last bill	Payments (-)	Additional activity (+ or -)	Balance before new charges (=)	New charges (+)	Total amount you owe (=)	New charges due by
73.31	73.31 CR	0.00	0.00	67.70	**$67.70**	**Jul 24 2019**

Meter reading - Meter KN47176

Current reading	97450
Previous reading	- 96888
kWh used	**562**

Energy usage

	Last Year	This Year
kWh this month	1638	562
Service days	30	29
kWh per day	54	19

****The electric service amount includes the following charges:**

Customer charge:	$10.54
Fuel: *($0.025630 per kWh)*	$14.40
Non-fuel: *($0.065310 per kWh)*	$36.70

Amount of your last bill		73.31
Payment received - Thank you		73.31 CR
Balance before new charges		$0.00
New charges (Rate: GS-1 GENERAL SVC NON-DEMAND / BUSINESS)		
Electric service amount	61.64**	
Storm charge	0.67	
Gross receipts tax	1.60	
Franchise charge	3.79	
Total new charges		$67.70
Total amount you owe		**$67.70**

- Payment received after **September 26, 2019** is considered **LATE**; a late payment charge of **1%** will apply.
- The storm charge on your August bill will be removed to reflect final payment of bonds issued during the 2004 and 2005 hurricane restoration effort. There will be a true-up on a future bill, subject to Florida Public Service Commission approval. Learn more: FPL.com/rates.

Please have your account number ready when contacting FPL.
Customer service: 1-800-375-2434
Outside Florida: 1-800-226-3545
To report power outages: 1-800-4OUTAGE (468-8243)

FPL.

23 450196 / 27 5303762509537225624300000

Please request changes on the back.
Notes on the front will not be detected.

B 5,8 5303 2

#BWNDJNQ ***
#3519943BQ769122#
PASEO CDD
12750 CITRUS PARK LN STE 115
TAMPA FL 33625-3784

Make check payable to FPL in U.S. funds and mail along with this coupon to:

FPL
GENERAL MAIL FACILITY
MIAMI FL 33188-0001

Account number	Total amount you owe	New charges due by	Amount enclosed
76250-95372	**$342.65**	**Jul 24 2019**	**$**

Your electric statement

For: Jun 04 2019 to Jul 03 2019 (29 days)
Customer name: PASEO CDD
Service address: 11047 ESTEBAN DR # FNTN

Account number: 76250-95372

Statement date: Jul 03 2019
Next meter reading: Aug 03 2019

Amount of your last bill	Payments (-)	Additional activity (+ or -)	Balance before new charges (=)	New charges (+)	Total amount you owe (=)	New charges due by
376.87	376.87 CR	0.00	0.00	342.65	**$342.65**	**Jul 24 2019**

Meter reading - Meter ACD8689

Current reading	24475
Previous reading	- 21166
kWh used	**3309**

Energy usage

	Last Year	This Year
kWh this month	3450	3309
Service days	30	29
kWh per day	115	114

****The electric service amount includes the following charges:**

Customer charge:	$10.54
Fuel: *($0.025630 per kWh)*	$84.81
Non-fuel: *($0.065310 per kWh)*	$216.11

Amount of your last bill	376.87
Payment received - Thank you	376.87 CR
Balance before new charges	$0.00

New charges (Rate: GS-1 GENERAL SVC NON-DEMAND / BUSINESS)

Electric service amount	311.46**	
Storm charge	3.94	
Gross receipts tax	8.09	
Franchise charge	19.16	
Total new charges		$342.65

Total amount you owe **$342.65**

- Payment received after **September 26, 2019** is considered **LATE**; a late payment charge of **1%** will apply.
- The storm charge on your August bill will be removed to reflect final payment of bonds issued during the 2004 and 2005 hurricane restoration effort. There will be a true-up on a future bill, subject to Florida Public Service Commission approval. Learn more: FPL.com/rates.

Please have your account number ready when contacting FPL.
Customer service: 1-800-375-2434
Outside Florida: 1-800-226-3545
To report power outages: 1-800-4OUTAGE (468-8243)

24 450196 / 27 5303805229945398736800000

Please request changes on the back.
Notes on the front will not be detected.

B 5,8 5303 9

#BWNDJNQ ***
#3519943BQ769122#
PASEO CDD
12750 CITRUS PARK LN STE 115
TAMPA FL 33625-3784

Make check payable to FPL in U.S. funds and mail along with this coupon to:

FPL
GENERAL MAIL FACILITY
MIAMI FL 33188-0001

Account number	Total amount you owe	New charges due by	Amount enclosed
80522-99453	**$863.78**	**Jul 24 2019**	**$**

Your electric statement

For: Jun 04 2019 to Jul 03 2019 (29 days)

Customer name: PASEO CDD
Service address: 11980 PASEO GRANDE BLVD # GRD HSE

Account number: 80522-99453

Statement date: Jul 03 2019
Next meter reading: Aug 03 2019

Amount of your last bill	Payments (-)	Additional activity (+ or -)	Balance before new charges (=)	New charges (+)	Total amount you owe (=)	New charges due by
922.29	922.29 CR	0.00	0.00	863.78	**$863.78**	**Jul 24 2019**

Meter reading - Meter KCJ5920

Current reading	20380
Previous reading	- 10175
kWh used	**10205**
Demand reading	22.57
Demand kW	**23**

Energy usage

	Last Year	This Year
kWh this month	10508	10205
Service days	30	29
kWh per day	350	351

****The electric service amount includes the following charges:**

Customer charge:	$26.32
Fuel: *($0.025630 per kWh)*	$261.55
Non-fuel: *($0.023490 per kWh)*	$239.71
Demand: *($11.24 per kW)*	$258.52

Amount of your last bill		922.29
Payment received - Thank you		922.29 CR
Balance before new charges		$0.00
New charges (Rate: GSD-1 GENERAL SERVICE DEMAND)		
Electric service amount	786.10**	
Storm charge	8.98	
Gross receipts tax	20.39	
Franchise charge	48.31	
Total new charges		$863.78

Total amount you owe **$863.78**

- Payment received after **September 26, 2019** is considered **LATE**; a late payment charge of **1%** will apply.
- The storm charge on your August bill will be removed to reflect final payment of bonds issued during the 2004 and 2005 hurricane restoration effort. There will be a true-up on a future bill, subject to Florida Public Service Commission approval. Learn more: FPL.com/rates.

Please have your account number ready when contacting FPL.
Customer service: 1-800-375-2434
Outside Florida: 1-800-226-3545
To report power outages: 1-800-4OUTAGE (468-8243)

FPL.

25 450196 / 27 53038371535140 2249000000

Please request changes on the back.
Notes on the front will not be detected.

B 5,8 5303

#BWNDJNQ ***
#3519943BQ769122#
PASEO CDD
12750 CITRUS PARK LN STE 115
TAMPA FL 33625-3784

Make check payable to FPL in U.S. funds and mail along with this coupon to:

FPL
GENERAL MAIL FACILITY
MIAMI FL 33188-0001

Account number	Total amount you owe	New charges due by	Amount enclosed
83715-35140	**$94.22**	**Jul 24 2019**	**$**

Your electric statement

For: Jun 04 2019 to Jul 03 2019 (29 days)
Customer name: PASEO CDD
Service address: 11442 PASEO GRANDE BLVD #ST LIGHTS

Account number: 83715-35140

Statement date: Jul 03 2019
Next meter reading: Aug 03 2019

Amount of your last bill	Payments (-)	Additional activity (+ or -)	Balance before new charges (=)	New charges (+)	Total amount you owe (=)	New charges due by
105.85	105.85 CR	0.00	0.00	94.22	**$94.22**	**Jul 24 2019**

Meter reading - Meter KG85059

Current reading	61719
Previous reading	- 60892
kWh used	**827**

Energy usage

	Last Year	This Year
kWh this month	2736	827
Service days	30	29
kWh per day	91	28

****The electric service amount includes the following charges:**

Customer charge:	$10.54
Fuel: *($0.025630 per kWh)*	$21.20
Non-fuel: *($0.065310 per kWh)*	$54.01

Amount of your last bill		105.85
Payment received - Thank you		105.85 CR
Balance before new charges		$0.00
New charges (Rate: GS-1 GENERAL SVC NON-DEMAND / BUSINESS)		
Electric service amount	85.75**	
Storm charge	0.98	
Gross receipts tax	2.22	
Franchise charge	5.27	
Total new charges		$94.22

Total amount you owe **$94.22**

- Payment received after **September 26, 2019** is considered **LATE**; a late payment charge of **1%** will apply.
- The storm charge on your August bill will be removed to reflect final payment of bonds issued during the 2004 and 2005 hurricane restoration effort. There will be a true-up on a future bill, subject to Florida Public Service Commission approval. Learn more: FPL.com/rates.

Please have your account number ready when contacting FPL.
Customer service: 1-800-375-2434
Outside Florida: 1-800-226-3545
To report power outages: 1-800-4OUTAGE (468-8243)

FPL.

26 450196 / 27

5303898710754069516000000

Please request changes on the back.
Notes on the front will not be detected.

B 5,8 5303 6

#BWNDJNQ ***
#3519943BQ769122#
PASEO CDD
12750 CITRUS PARK LN STE 115
TAMPA FL 33625-3784

Make check payable to FPL in U.S. funds and mail along with this coupon to:

FPL
GENERAL MAIL FACILITY
MIAMI FL 33188-0001

Account number	Total amount you owe	New charges due by	Amount enclosed
89871-07540	**$61.59**	**Jul 24 2019**	**$**

Your electric statement

For: Jun 04 2019 to Jul 03 2019 (29 days)
Customer name: PASEO CDD
Service address: 0 PASEO DR #SIGN

Account number: 89871-07540

Statement date: Jul 03 2019
Next meter reading: Aug 03 2019

Amount of your last bill	Payments (-)	Additional activity (+ or -)	Balance before new charges (=)	New charges (+)	Total amount you owe (=)	New charges due by
68.50	68.50 CR	0.00	0.00	61.59	**$61.59**	**Jul 24 2019**

Meter reading - Meter KG85058

Current reading	18274
Previous reading	- 17773
kWh used	**501**

Energy usage

	Last Year	This Year
kWh this month	706	501
Service days	30	29
kWh per day	23	17

****The electric service amount includes the following charges:**

Customer charge:	$10.54
Fuel: *($0.025630 per kWh)*	$12.84
Non-fuel: *($0.065310 per kWh)*	$32.72

Amount of your last bill		68.50
Payment received - Thank you		68.50CR
Balance before new charges		$0.00
New charges (Rate: GS-1 GENERAL SVC NON-DEMAND / BUSINESS)		
Electric service amount	56.10**	
Storm charge	0.60	
Gross receipts tax	1.45	
Franchise charge	3.44	
Total new charges		$61.59

Total amount you owe **$61.59**

- Payment received after **September 26, 2019** is considered **LATE**; a late payment charge of **1%** will apply.
- The storm charge on your August bill will be removed to reflect final payment of bonds issued during the 2004 and 2005 hurricane restoration effort. There will be a true-up on a future bill, subject to Florida Public Service Commission approval. Learn more: FPL.com/rates.

Please have your account number ready when contacting FPL.
Customer service: 1-800-375-2434
Outside Florida: 1-800-226-3545

FPL.

27 450196 / 27 5303908334006839657200000

Please request changes on the back.
Notes on the front will not be detected.

B 5,8 5303 3

#BWNDJNQ ***
#3519943BQ769122#
PASEO CDD
12750 CITRUS PARK LN STE 115
TAMPA FL 33625-3784

Make check payable to FPL in U.S. funds and mail along with this coupon to:

FPL
GENERAL MAIL FACILITY
MIAMI FL 33188-0001

Account number	Total amount you owe	New charges due by	Amount enclosed
90833-40068	**$275.69**	**Jul 24 2019**	**$**

Your electric statement

For: Jun 04 2019 to Jul 03 2019 (29 days)
Customer name: PASEO CDD
Service address: 8303 ADELIO LN # LF-D

Account number: 90833-40068

Statement date: Jul 03 2019
Next meter reading: Aug 03 2019

Amount of your last bill	Payments (-)	Additional activity (+ or -)	Balance before new charges (=)	New charges (+)	Total amount you owe (=)	New charges due by
299.91	299.91 CR	0.00	0.00	275.69	**$275.69**	**Jul 24 2019**

Meter reading - Meter ACD2313

Current reading	24255
Previous reading	- 21615
kWh used	**2640**

Energy usage

	Last Year	This Year
kWh this month	2558	2640
Service days	30	29
kWh per day	85	91

****The electric service amount includes the following charges:**

Customer charge:	$10.54
Fuel: *($0.025630 per kWh)*	$67.66
Non-fuel: *($0.065310 per kWh)*	$172.42

Amount of your last bill	299.91
Payment received - Thank you	299.91 CR
Balance before new charges	$0.00

New charges (Rate: GS-1 GENERAL SVC NON-DEMAND / BUSINESS)

Electric service amount	250.62**	
Storm charge	3.14	
Gross receipts tax	6.51	
Franchise charge	15.42	
Total new charges		$275.69

Total amount you owe **$275.69**

- Payment received after **September 26, 2019** is considered **LATE**; a late payment charge of **1%** will apply.
- The storm charge on your August bill will be removed to reflect final payment of bonds issued during the 2004 and 2005 hurricane restoration effort. There will be a true-up on a future bill, subject to Florida Public Service Commission approval. Learn more: FPL.com/rates.

Please have your account number ready when contacting FPL.
Customer service: 1-800-375-2434
Outside Florida: 1-800-226-3545
To report power outages: 1-800-4OUTAGE (468-8243)

FPL

28 450196 / 27 68297 5303916967456 2 9530700000

Please request changes on the back.
Notes on the front will not be detected.

B 5,8 5303

#BWNDJNQ ***
#3519943BQ769122#
PASEO CDD
12750 CITRUS PARK LN STE 115
TAMPA FL 33625-3784

Make check payable to FPL in U.S. funds and mail along with this coupon to:

FPL
GENERAL MAIL FACILITY
MIAMI FL 33188-0001

Account number	Total amount you owe	New charges due by	Amount enclosed
91696-74562	**$703.59**	**Jul 24 2019**	**$**

Your electric statement

For: Jun 04 2019 to Jul 03 2019 (29 days)
Customer name: PASEO CDD
Service address: 8600 FALISTO PL # PUMP

Account number: 91696-74562

Statement date: Jul 03 2019
Next meter reading: Aug 03 2019

Amount of your last bill	Payments (-)	Additional activity (+ or -)	Balance before new charges (=)	New charges (+)	Total amount you owe (=)	New charges due by
727.91	727.91 CR	0.00	0.00	703.59	**$703.59**	**Jul 24 2019**

Meter reading - Meter KNL2164

Current reading	88531
Previous reading	- 82624
kWh used	**5907**
Demand reading	29.26
Demand kW	**29**

Energy usage

	Last Year	This Year
kWh this month	7966	5907
Service days	30	29
kWh per day	265	203

****The electric service amount includes the following charges:**

Customer charge:	$26.32
Fuel: *($0.025630 per kWh)*	$151.40
Non-fuel: *($0.023490 per kWh)*	$138.76
Demand: *($11.24 per kW)*	$325.96

Enroll now in FPL Budget Billing by paying $682.97 in 1 payment by the due date instead of $703.59. Your bill will be about the same each month & stabilized year-round. Learn more at FPL.com/bb

Amount of your last bill		727.91
Payment received - Thank you		727.91 CR
Balance before new charges		$0.00
New charges (Rate: GSD-1 GENERAL SERVICE DEMAND)		
Electric service amount	642.44**	
Storm charge	5.19	
Gross receipts tax	16.61	
Franchise charge	39.35	
Total new charges		$703.59
Total amount you owe		**$703.59**

- Payment received after **September 26, 2019** is considered **LATE**; a late payment charge of **1%** will apply.
- The storm charge on your August bill will be removed to reflect final payment of bonds issued during the 2004 and 2005 hurricane restoration effort. There will be a true-up on a future bill, subject to Florida Public Service Commission approval. Learn more: FPL.com/rates.

Please have your account number ready when contacting FPL.
Customer service: 1-800-375-2434
Outside Florida: 1-800-226-3545
To report power outages: 1-800-4OUTAGE (468-8243)

FPL.

29 450196 / 27 5303920305947344189000000

Please request changes on the back.
Notes on the front will not be detected.

B 5,8 5303 4

#BWNDJNQ ***
#3519943BQ769122#
PASEO CDD
12750 CITRUS PARK LN STE 115
TAMPA FL 33625-3784

Make check payable to FPL in U.S. funds and mail along with this coupon to:

FPL
GENERAL MAIL FACILITY
MIAMI FL 33188-0001

Account number	Total amount you owe	New charges due by	Amount enclosed
92030-59473	**$98.14**	**Jul 24 2019**	**$**

Your electric statement

For: Jun 04 2019 to Jul 03 2019 (29 days)
Customer name: PASEO CDD
Service address: 8305 ADELIO LN # SL-1

Account number: 92030-59473

Statement date: Jul 03 2019
Next meter reading: Aug 03 2019

Amount of your last bill	Payments (-)	Additional activity (+ or -)	Balance before new charges (=)	New charges (+)	Total amount you owe (=)	New charges due by
112.84	112.84 CR	0.00	0.00	98.14	**$98.14**	**Jul 24 2019**

Meter reading - Meter ACD3094

Current reading	57007
Previous reading	- 56141
kWh used	**866**

Energy usage

	Last Year	This Year
kWh this month	1487	866
Service days	30	29
kWh per day	50	30

****The electric service amount includes the following charges:**

Customer charge:	$10.54
Fuel: *($0.025630 per kWh)*	$22.20
Non-fuel: *($0.065310 per kWh)*	$56.56

Amount of your last bill		112.84
Payment received - Thank you		112.84 CR
Balance before new charges		$0.00
New charges (Rate: GS-1 GENERAL SVC NON-DEMAND / BUSINESS)		
Electric service amount	89.30**	
Storm charge	1.03	
Gross receipts tax	2.32	
Franchise charge	5.49	
Total new charges		$98.14

Total amount you owe **$98.14**

- Payment received after **September 26, 2019** is considered **LATE**; a late payment charge of **1%** will apply.
- The storm charge on your August bill will be removed to reflect final payment of bonds issued during the 2004 and 2005 hurricane restoration effort. There will be a true-up on a future bill, subject to Florida Public Service Commission approval. Learn more: FPL.com/rates.

Please have your account number ready when contacting FPL.
Customer service: 1-800-375-2434
Outside Florida: 1-800-226-3545
To report power outages: 1-800-4OUTAGE (468-8243)

FPL

30 450196 / 27 5303998532106795673400000

Please request changes on the back.
Notes on the front will not be detected.

B 5,8 5303 9

#BWNDJNQ ***
#3519943BQ769122#
PASEO CDD
C/O PASEO CDD
12750 CITRUS PARK LN STE 115
TAMPA FL 33625-3784

Make check payable to FPL in U.S. funds and mail along with this coupon to:

FPL
GENERAL MAIL FACILITY
MIAMI FL 33188-0001

Account number	Total amount you owe	New charges due by	Amount enclosed
99853-21067	**$437.65**	**Jul 24 2019**	**$**

Your electric statement

For: Jun 04 2019 to Jul 03 2019 (29 days)
Customer name: PASEO CDD
Service address: 11141 ESTEBAN DR # LF-B

Account number: 99853-21067

Statement date: Jul 03 2019
Next meter reading: Aug 03 2019

Amount of your last bill	Payments (-)	Additional activity (+ or -)	Balance before new charges (=)	New charges (+)	Total amount you owe (=)	New charges due by
480.28	480.28 CR	0.00	0.00	437.65	**$437.65**	**Jul 24 2019**

Meter reading - Meter ACD2849

Current reading	10292
Previous reading	- 06034
kWh used	**4258**

Energy usage

	Last Year	This Year
kWh this month	4333	4258
Service days	30	29
kWh per day	144	147

****The electric service amount includes the following charges:**

Customer charge:	$10.54
Fuel: *($0.025630 per kWh)*	$109.13
Non-fuel: *($0.065310 per kWh)*	$278.10

Amount of your last bill		480.28
Payment received - Thank you		480.28 CR
Balance before new charges		$0.00
New charges (Rate: GS-1 GENERAL SVC NON-DEMAND / BUSINESS)		
Electric service amount	397.77**	
Storm charge	5.07	
Gross receipts tax	10.33	
Franchise charge	24.48	
Total new charges		$437.65

Total amount you owe **$437.65**

- Payment received after **September 26, 2019** is considered **LATE**; a late payment charge of **1%** will apply.
- The storm charge on your August bill will be removed to reflect final payment of bonds issued during the 2004 and 2005 hurricane restoration effort. There will be a true-up on a future bill, subject to Florida Public Service Commission approval. Learn more: FPL.com/rates.

Please have your account number ready when contacting FPL.
Customer service: 1-800-375-2434
Outside Florida: 1-800-226-3545
To report power outages: 1-800-4OUTAGE (468-8243)

FPL.

17 450196 / 27

5303567595652757881000000

Please request changes on the back.
Notes on the front will not be detected.

B 5,8 5303 5

#BWNDJNQ ***
#3519943BQ769122#
PASEO CDD
12750 CITRUS PARK LN STE 115
TAMPA FL 33625-3784

Make check payable to FPL in U.S. funds and mail along with this coupon to:

FPL
GENERAL MAIL FACILITY
MIAMI FL 33188-0001

Account number	Total amount you owe	New charges due by	Amount enclosed
56759-56527	**$18.87**	**Jul 24 2019**	**$**

Your electric statement

For: Jun 04 2019 to Jul 03 2019 (29 days)
Customer name: PASEO CDD
Service address: 11197 PASEO DR #PUMP

Account number: 56759-56527

Statement date: Jul 03 2019
Next meter reading: Aug 03 2019

Amount of your last bill	Payments (-)	Additional activity (+ or -)	Balance before new charges (=)	New charges (+)	Total amount you owe (=)	New charges due by
19.66	19.66 CR	0.00	0.00	18.87	**$18.87**	**Jul 24 2019**

Meter reading - Meter KG86071

Current reading	02400
Previous reading	- 02326
kWh used	**74**

Energy usage

	Last Year	This Year
kWh this month	77	74
Service days	30	29
kWh per day	2	2

****The electric service amount includes the following charges:**

Customer charge:	$10.54
Fuel: *($0.025630 per kWh)*	$1.90
Non-fuel: *($0.065310 per kWh)*	$4.84

Amount of your last bill		19.66
Payment received - Thank you		19.66CR
Balance before new charges		$0.00

New charges (Rate: GS-1 GENERAL SVC NON-DEMAND / BUSINESS)

Electric service amount	17.28**	
Storm charge	0.08	
Gross receipts tax	0.45	
Franchise charge	1.06	
Total new charges		$18.87

Total amount you owe **$18.87**

- Payment received after **September 26, 2019** is considered **LATE**; a late payment charge of **1%** will apply.
- The storm charge on your August bill will be removed to reflect final payment of bonds issued during the 2004 and 2005 hurricane restoration effort. There will be a true-up on a future bill, subject to Florida Public Service Commission approval. Learn more: FPL.com/rates.

Please have your account number ready when contacting FPL.
Customer service: 1-800-375-2434
Outside Florida: 1-800-226-3545
To report power outages: 1-800-4OUTAGE (468-8243)

Beth Donovan

From: FtMyers@PestDefense.com
Sent: Monday, June 24, 2019 3:22 PM
To: CDD Invoice
Subject: Invoice 63152222

RECEIVED
JUN 24 2019

HomeTeam PEST DEFENSE

HomeTeam Pest Defense, Inc.
5570 Lee Street
Suite 12
Lehigh Acres, FL 33971-1566
239-561-1300

Rec'd Rizzetta & Co, Inc
O/M approval Belinda Blandon Date 6/28/19
Date entered JUN 27 2019
Fund 001 GL 52900 OC 4700
Check #

INVOICE

Bill To [1842113]	Service Address [1842113]
Paseo CDD Paseo Community Development District 3434 Colwell Ave Suite 200 Tampa, FL 33614-8390	Paseo CDD Paseo Gatehouse 11980 Paseo Grande Blvd Fort Myers, FL 33912-9010

Invoice #	63152222	Technician	Jameka Johnson
Invoice Date	05/03/2019	License #	
Service Date	05/03/2019	Terms	DUE UPON RECEIPT
		Purchase Order	

Service	Description	Quantity	Price	Subtotal
MS	Rodent Service	1.00	$40.00	$40.00
			Subtotal	$40.00
			Tax	$0.00
			Total	$40.00
			Amount Paid	$0.00
			Balance	$40.00

Thank you for your business! If you have any questions, please call us.

	Megan- scheduled 05/03 12-2 w/ retreat
Order/Service Instructions	Hi Mr/Ms . Paseo, Today I inspected and replenished the bait on all rodent stations around your home. This fresh bait will help keep rodents from becoming a nuisance around your home. Thank you for choosing HomeTeam as your pest service provider. Your next scheduled service will be in August.

Date Rec'd Rizzetta & Co., Inc. JUL 02 2018
D/M approval Belinda Blandon Date 7/3/19
Date entered
Fund 001 GL 53800 OC 4608
Check#

Johnson Engineering, Inc.
Remit To:
P.O. Box 2112
Fort Myers, FL 33902
Ph: 239.334.0046 Fax: 239.334.3661

Invoice

Project Manager Timothy Denison

June 26, 2019
Project No: 20097877-018
Invoice No: 12

FEID #59-1173834

Accounts Payable
Paseo CDD
c/o Rizzetta & Company, Inc.
9428 Camden Field Parkway
Riverview, FL 33569

Project 20097877-018 Paseo WUP Compliance Monitoring 2018
20097877-018
Paseo WUP Compliance Monitoring 2018
Professional Services through June 16, 2019

PROFESSIONAL SERVICES

Phase No.	Phase Description	Contract Amount	Fee Type	%	Total Inv To-Date	Previously Invoiced	Current Inv Amount	Balance to Complete
01	Water Level and Pumpage Monitoring	4,800.00	LS	100 %	4,800.00	4,320.00	480.00	0.00
02	Surface Water Quality Sampling	4,800.00	LS	100 %	4,800.00	4,800.00	0.00	0.00
03	Six Mile Cypress Slough Data Evaluation	2,950.00	LS	100 %	2,950.00	2,655.00	295.00	0.00
04	Surface Water Quality Reporting	3,490.00	LS	25 %	872.50	0.00	872.50	2,617.50
05	Surface Water Quality Lab Analysis	2,100.00	LS	100 %	2,100.00	2,100.00	0.00	0.00
06	Esperanza Pumpage Monitoring & Reporting	2,400.00	LS	100 %	2,400.00	2,160.00	240.00	0.00
REIM	Reimbursable Expenses	500.00	T&M	90 %	450.00	450.00	0.00	50.00
	Totals	21,040.00			18,372.50	16,485.00	1,887.50	2,667.50

SUB-TOTAL PROFESSIONAL SERVICES: **1,887.50**

INVOICE TOTAL: **1,887.50**

Outstanding Invoices

Number	Date	0 - 30	31 - 60	61 - 90	91 - 120	121 +	Balance
11	5/24/2019	0.00	1,550.50	0.00	0.00	0.00	1,550.50
	Total	0.00	1,550.50	0.00	0.00	0.00	1,550.50

LATHAM, SHUKER, EDEN & BEAUDINE, LLP

ATTORNEYS AT LAW

111 N. MAGNOLIA AVE, STE 1400
ORLANDO, FLORIDA 32801
POST OFFICE BOX 3353
ORLANDO, FLORIDA 32802
TELEPHONE: (407) 481-5800
FACSIMILE: (407) 481-5801

RECEIVED
JUN 25 2019

June 19, 2019

Paseo Community Development District
Attention: Accounts Payable
9530 Marketplace Road, Suite 206
Ft. Myers, FL 33912

Date Rec'd Rizzetta & Co, Inc
D/M approval Belinda Blandon Date 6/28/19
Date entered JUN 27 2019
Fund 001 GL 51400 OC 3107
Check #

INVOICE

Matter ID: 7292-001
General

Invoice # 86340
Federal ID # 59-3366512

For Professional Services Rendered:

05/10/2019	ACD	Revise Hotwire Easement; follow up emails on status.	1.90 hr	$437.00
05/15/2019	ACD	Review agenda and prepare for next weeks meeting; revise FY19-20 Budget Resolution.	0.90 hr	$207.00
05/16/2019	jms	Review agenda and provide attorney with notes regarding outstanding items	0.20 hr	$15.00
05/20/2019	jms	Prepared draft Audit Response Letter for attorney review	0.50 hr	$37.50
05/22/2019	ACD	Prepare for and attend cdd meeting by phone.	1.20 hr	$276.00
05/22/2019	ACD	Review, revise and transmit updated Hotwire Easement.	1.90 hr	$437.00
05/28/2019	ACD	Review Engineer easement issues; Follow up email on Hotwire easement non-compliance issuers.	0.40 hr	$92.00
05/28/2019	JAC	Draft Audit Response letter to describe Bond conversion reissuance and cure of Bond default	1.20 hr	$372.00
05/30/2019	ACD	Follow up emails on Hotwire easement with Hotwire counsel.	0.60 hr	$138.00
		Total Professional Services:		*$2,011.50*

For Disbursements Incurred:

05/31/2019	Document Reproduction Expense	$15.00
	Total Disbursements Incurred:	*$15.00*

June 19, 2019

Matter ID: 7292-001

Invoice # 86340
Federal ID # 59-3366512

INVOICE SUMMARY

For Professional Services:	*8.80* Hours	*$2,011.50*
For Disbursements Incurred:		*$15.00*
New Charges this Invoice:		*$2,026.50*
Previous Balance:		*$1,337.00*
Less Payment and Credits Received:		*$1,337.00*
Outstanding Balance:		*$0.00*
Plus New Charges this Invoice:		*$2,026.50*
Total Due:		***$2,026.50***

Billed Through: May 31, 2019

LATHAM, SHUKER, EDEN & BEAUDINE, LLP

ATTORNEYS AT LAW

111 N. MAGNOLIA AVE, STE 1400
ORLANDO, FLORIDA 32801
POST OFFICE BOX 3353
ORLANDO, FLORIDA 32802
TELEPHONE: (407) 481-5800
FACSIMILE: (407) 481-5801

RECEIVED
JUL 23 2019

July 17, 2019

Paseo Community Development District
Attention: Accounts Payable
9530 Marketplace Road, Suite 206
Ft. Myers, FL 33912

INVOICE

Matter ID: 7292-001
General

Invoice # 86526
Federal ID # 59-3366512

For Professional Services Rendered:

06/06/2019	ACD	Follow up emails regarding Hotwire Easement; transmit revised easement language regarding landscaping.	1.20 hr	$276.00
06/11/2019	ACD	Email on Hotwire Easement, review proposed changes.	0.70 hr	$161.00
06/13/2019	ACD	Review and revise Johnson Engineering contract for water reporting.	1.10 hr	$253.00
06/13/2019	jms	Prepare for attorney review Johnson Engineering (water) Contract	0.20 hr	$15.00
06/14/2019	ACD	Conference call with Hotwire on easement / engineering issues; follow up revisions to easement; transmit engineering letter.	1.90 hr	$437.00
06/17/2019	ACD	Review and sign off on ad forms and draft minutes.	0.30 hr	$69.00
06/19/2019	ACD	Prepare for and attend meeting; contact Manager regarding attendance; contact Vice Chair.	0.90 hr	$207.00
06/19/2019	jms	Review agenda and provide notes on attorney related action items	0.20 hr	$15.00
06/20/2019	ACD	Review and sign off on final form of Hotwire Easement; email on execution; contact Manager.	1.20 hr	$276.00
06/21/2019	ACD	Prepare and transmit License Agreement for Retaining Wall Repair; call with Manager.	2.20 hr	$506.00
06/24/2019	ACD	Review comments from Honc, update HOA / Honc license agreement for wall repair.	1.40 hr	$322.00
06/26/2019	ACD	Prepare for and attend CDD meeting. (Courtesy Discount/Time Reduced)	5.20 hr	$1,196.00
			Total Professional Services:	*$3,733.00*

For Disbursements Incurred:

06/30/2019	Document Reproduction Expense	$2.70
	Total Disbursements Incurred:	*$2.70*

July 17, 2019

Matter ID: 7292-001

Invoice # 86526
Federal ID # 59-3366512

INVOICE SUMMARY

For Professional Services:	*16.50* Hours	*$3,733.00*
For Disbursements Incurred:		*$2.70*
New Charges this Invoice:		*$3,735.70*
Previous Balance:		*$2,026.50*
Less Payment and Credits Received:		*$2,026.50*
Outstanding Balance:		*$0.00*
Plus New Charges this Invoice:		*$3,735.70*
Total Due:		***$3,735.70***

Billed Through: June 30, 2019

Date Rec'd Rizzetta & Co, Inc.
D/M approval Belinda Blandon Date 7/29/19
Date entered JUL 2 6 2019
Fund 001 GL 51400 OC 3107
Check #

MCDIRMIT DAVIS
CERTIFIED PUBLIC ACCOUNTANTS AND ADVISORS
934 N. Magnolia Ave.
Suite 100
Orlando, FL 32803

(407) 843-5406
www.mcdirmitdavis.com

RECEIVED
JUL 05 2019

PASEO CDD
c/o RIZZETTA & COMPANY
12750 CITRUS PARK LANE, SUITE 115
TAMPA, FL 33625

Date: 7/5/2019
Invoice Number: 42034
Client: 27106.0

Accounting services rendered in connection with the preparation and issuance of audited financial statements for PASEO CDD for the year ended September 30, 2018.	$4,300.00
Total Due This Invoice	$4,300.00

Date Rec'd Rizzetta & Co, Inc_____
D/M approval Belinda Blandon Date 8/8/19
Date entered JUL 11 2019
Fund 001 GL 51300 OC 3202
Check #_____

Thank you for your business.

Naples Electric Motor Works, Inc.

2088 J&C Blvd.
Naples Fl. 34109
239-591-1313

Invoice

RECEIVED
JUN 2 7 2019

Date	Invoice #
6/27/2019	25838

Bill To
Paseo Community Development District 9530 Marketplace Rd. Suite 206 Ft. Myers, FL 33912

P.O. No.	Terms	Project
Belinda Blandon	Due on receipt	

Quantity	Description	Rate	Amount
	Pump #3 Repairs		
1	Installed one Yaskawa Variable Frequency Drive IQ 1000	5,653.15	5,653.15
1	Installed one Ditek D100-4803D surge suppressor	650.00	650.00
5	Replaced 5 600 volt 90 Amp. input fuses	55.36	276.80
1	On site labor	800.00	800.00

ate Rec'd Rizzetta & Co, Inc
M approval Belinda Blandon Date 6/28/19
Date entered JUN 2 7 2019
Fund 001 GL 53900 OC 41609
Check #

Phone #
(239) 591-1313

Total $7,379.95

Pinnacle Landscapes, Inc.

PO Box 100520
Cape Coral, FL 33910

Invoice

Date	Invoice #
6/27/2019	11157

Bill To
Paseo CDD c/o Rizzetta & Company 9530 Marketplace Road Suite 206 Fort Myers, Florida 33912

RECEIVED
JUN 27 2019

Terms
Due on receipt

Description	Qty	Rate	Amount
June Field Report			
#37-- Flush cut and dispose of Maple tree- West side of Paseo Grande		200.00	200.00
#71-- Flush cut and dispose of Foxtail Palm- West entrance		75.00	75.00
#79- Flush cut and dispose of palm- At old construction entrance		75.00	75.00

Date Rec'd Rizzetta & Co, Inc_____
D/M approval Belinda Blandon Date 6/28/19
JUN 27 2019
Date entered_____
Fund 001 GL 53900 OC 41650
Check #_____

	Total	$350.00

Pinnacle Landscapes, Inc.

PO Box 100520
Cape Coral, FL 33910

RECEIVED
JUL 0 1 2019

Invoice

Date	Invoice #
6/30/2019	11164

Bill To
Paseo CDD c/o Rizzetta & Company 9530 Marketplace Road Suite 206 Fort Myers, Florida 33912

Terms
Due on receipt

Description	Qty	Rate	Amount
Manually ran well pumps for 11 days while waiting for repairs by Naples Motor Electric June 4, 5, 6, 10, 11, 12, 13, 17, 19, 24, 26, 2019	11	45.00	495.00
Total			$495.00

Date Rec'd Rizzetta & Co, Inc_____

D/M approval Belinda Blandon Date 7/3/19

Date entered JUL 0 2 2019

Fund 001 GL 53800 OC 4598

Check #_____

Pinnacle Landscapes, Inc.

PO Box 100520
Cape Coral, FL 33910

Invoice

Date	Invoice #
7/12/2019	11183

RECEIVED
JUL 15 2019

Bill To
Paseo CDD c/o Rizzetta & Company 9530 Marketplace Road Suite 206 Fort Myers, Florida 33912

Terms
Due on receipt

Description	Qty	Rate	Amount
Replacement of controller B and C with new Hunter ACC2 controller	18	45.00	810.00
Irrigation Repairs			
Labor to include mounting new controller, running two-wire and electrical service to new controller, removal of old controllers (to hopefully be stored in Mike's shed for use of parts in other controllers if needed). Removal and disposal of concrete pads			
Labor-- 18 Hours @ $45.00/ Hour			
Irrigation Repairs			
Parts			
Hunter ACC2 Controller- Wall mount	1	1,950.00	1,950.00
Hunter ACC2 75 Station Modules	2	620.00	1,240.00
3/4" Conduit	15	1.50	22.50
1/2" Conduit	15	2.50	37.50
8' Grounding Rod	1	22.00	22.00
Grounding Rod Clamp	1	8.00	8.00
6" Round Valve Box	1	8.00	8.00
Romex 14 gauge wire	20	1.10	22.00
Two-Wire	40	2.10	84.00
Wire Nuts	10	1.10	11.00
Splice Kits	10	5.50	55.00
..e Rec'd Rizzetta & Co, Inc			
)/M approval Belinda Blandon Date 7/19/19			
)ate entered JUL 17 2019			
ıind 001 GL 53900 OC 4609			
'heck #			
Total			$4,270.00

Pinnacle Landscapes, Inc.

PO Box 100520
Cape Coral, FL 33910

Invoice

Date	Invoice #
7/16/2019	11187

RECEIVED
JUL 17 2019

Bill To
Paseo CDD c/o Rizzetta & Company 9530 Marketplace Road Suite 206 Fort Myers, Florida 33912

Terms
Due on receipt

Description	Qty	Rate	Amount
Grub prevention application		4,940.00	4,940.00
	Total		$4,940.00

Date Rec'd Rizzetta & Co, Inc_____

D/M approval Belinda Blandon Date 7/19/19

Date entered JUL 18 2019

Fund 001 GL 53900 OC 4617

Check #_____

Rizzetta & Company, Inc.
3434 Colwell Avenue
Suite 200
Tampa FL 33614

Invoice

Date	Invoice #
7/1/2019	INV0000041487

Bill To:

PASEO CDD
3434 Colwell Avenue, Suite 200
Tampa FL 33614

Services for the month of	Terms	Client Number
July	Upon Receipt	00300

Description	Qty	Rate	Amount
District Management Services 3101	1.00	$2,975.00	$2,975.00
Administrative Services 3100	1.00	$766.67	$766.67
Accounting Services 3201	1.00	$1,910.00	$1,910.00
Financial & Revenue Collections 3111	1.00	$437.50	$437.50
Field Services 53900 · 4038	1.00	$700.00	$700.00

RECEIVED
Date Rec'd Rizzetta & Co, Inc. JUN 20 2019
PM approval Belinda Blandon Date 6/21/19
Date entered JUN 20 2019
Fund 001 GL 51300 OC KV
Check #

Subtotal	$6,789.17
Total	$6,789.17

Rizzetta Amenity Services, Inc
3434 Colwell Avenue
Suite 200
Tampa FL 33614

Invoice

Date	Invoice #
6/28/2019	INV00000000006432

Bill To:

Paseo CDD
3434 Colwell Avenue
Suite 200
Tampa FL 33614

RECEIVED
JUN 27 2019

Services for the month of	Terms	Client Number
June	Due on receipt	04016

Description	Qty	Rate	Amount
Actual Bi-Weekly Payroll	1.00	$1,880.35	$1,880.35
Employee(s) Insurance Reimbursement	1.00	$196.36	$196.36

Date Rec'd Rizzetta & Co, Inc_____

D/M approval Belinda Blandon Date 6/28/19

Date entered JUN 27 2019

Fund 001 GL 53900 OC 4639

Check #_____

Subtotal	$2,076.71
Total	$2,076.71

Rizzetta Amenity Services, Inc
3434 Colwell Avenue
Suite 200
Tampa FL 33614

Invoice

Date	Invoice #
6/30/2019	INV00000000006461

Bill To:

Paseo CDD
3434 Colwell Avenue
Suite 200
Tampa FL 33614

RECEIVED
JUL 10 2019

Services for the month of	Terms	Client Number
June	Due on receipt	04016

Description	Qty	Rate	Amount
Cell Phone	50.00	$1.00	$50.00

te Rec'd Rizzetta & Co, Inc_____
/M approval Belinda Blandon Date 8/8/19
ate entered JUL 11 2019
nd 001 GL 53900 OC 4639
k #_____

Subtotal	$50.00
Total	$50.00

Rizzetta Amenity Services, Inc
3434 Colwell Avenue
Suite 200
Tampa FL 33614

Invoice

Date	Invoice #
7/12/2019	INV00000000006494

RECEIVED
JUL 11 2019

Bill To:

Paseo CDD
3434 Colwell Avenue
Suite 200
Tampa FL 33614

Services for the month of	Terms	Client Number
July	Due on receipt	04016

Description	Qty	Rate	Amount
Amenity Management Services	1.00	$750.00	$750.00
Actual Bi-Weekly Payroll	1.00	$1,883.84	$1,883.84
Employee(s) Insurance Reimbursement	1.00	$196.36	$196.36

Site Rec'd Rizzetta & Co, Inc_____
D/M approval Belinda Blandon Date 7/12/19
Date entered JUL 11 2019
Fund 001 GL 53900 OC 4639
Check #_____

Subtotal	$2,830.20
Total	$2,830.20

Rizzetta Technology Services
3434 Colwell Avenue
Suite 200
Tampa FL 33614

Invoice

Date	Invoice #
7/1/2019	INV0000004514

Bill To:

PASEO CDD
3434 Colwell Avenue, Suite 200
Tampa FL 33614

RECEIVED
JUN 19 2019

Services for the month of	Terms	Client Number
July		00300

Description	Qty	Rate	Amount
EMail Accounts, Admin & Maintenance	6	$15.00	$90.00
Website Hosting, Backup and Content Updating	1	$100.00	$100.00

Date Rec'd Rizzetta & Co, Inc_____
D/M approval Belinda Blandon Date 6/21/19
Date entered JUN 20 2019
Fund 001 GL 51300 OC 5103
Check # _____

Subtotal	$190.00
Total	$190.00

SOLITUDE
LAKE MANAGEMENT

Voice: (888) 480-LAKE • Fax: (888) 358-0088

INVOICE

Invoice Number: PI-A00278832
Invoice Date: 07/01/19

PROPERTY: Paseo

RECEIVED
JUL 16 2019

SOLD TO: Paseo
c/o Rizzetta & Company
9530 Market Place Road Ste. 206
Ft. Myers, FL 33912

Customer ID	Customer PO	Payment Terms
P2267		Due upon receipt

Sales Rep ID	Shipping Method	Ship Date	Due Date
Bill Kurth			07/01/19

Qty	Item Description	Unit Price	Extension
1	Lake & Pond Management Services SVR06195 07/01/19 - 07/31/19 Lake & Pond Management Services	2,041.00	2,041.00

Date Rec'd Rizzetta & Co, Inc_____
D/M approval Belinda Blandon Date 7/19/19
Date entered JUL 17 2019
Fund 001 GL 53900 OC 4626
Check #_____

PLEASE REMIT PAYMENT TO:

SOLitude Lake Management, LLC
1320 Brookwood Drive, Suite H
Little Rock, AR 72202

Subtotal	2,041.00
Sales Tax	0.00
Total Invoice	2,041.00
Payment Received	0.00
TOTAL	**2,041.00**

Suntech Electrical Contractors, Inc.

Cape Coral, FL 33991
75 Mid Cape Terrace

RECEIVED
JUN 25 2019

Invoice

Date	Invoice #
6/24/2019	7944

Bill To
Paseo CDD 9530 Market Place Road Suite 206 Fort Myers, FL 33912

Project Name

P.O. No.	Terms

Description	Amount
Job: Paseo Community Date Completed: 6/5/19 Description: 1.) Replaced bad bulb & ballast on 39 Watt MIT bridge light 2.) 10 Street lights out due to tripping breaker. Found short in bottom of pole #278. Repaired & reset street circuit 3.) Replaced 3- 120Volt photo calls at entrance for LV landscape lighting Material Cost ---------- $278.00 Labor: 2 men 6 hours ---------- $780.00 Total Amount Due ---------- $1,058.00	1,058.00

Date Rec'd Rizzetta & Co, Inc_____

D/M approval Belinda Blandon Date 6/28/19

Date entered JUN 27 2019

Fund 001 GL 54100 OC 4613

Check #_____

	Phone #	(239) 772-7177	**Payments/Credits**	$0.00
			Total	$1,058.00

Classified/Legal Advertising Invoice

The Breeze Legals

2510 DEL PRADO BLVD.

CAPE CORAL, FL
33904
(239) 574-1110

PASEO COMMUNITY DEVELOPMENT DISTRICT
12750 CITRUS PARK LANE
SUITE 115
TAMPA, FL

33625

RECEIVED
JUL 0 5 2019

07/02/2019 10:18:56AM

Phone: 239 936-0913

No: 114354

Ad No	Customer No:	Start Date	Stop Date	Category:	Classification:
114354	**L40940**	**07-03-2019**	**07-03-2019**	**Legals**	**MISCELLANEOUS**

Order No	Rate:	Lines:	Words:	Inches:		Cost	Payments	Balance
	LA	**107**	**358**	**10.40**		**53.50**	**.00**	**53.50**

Publications ... Runs	Solicitor:	Origin:	Sales Rep:	Credit Card	Credit Card Number	Card Expire
Breeze Legals ... 1 **Online Legals ... 1**	**SM**	**17**	**3**			

Identifier

NOTICE OF PUBLIC MEETING
PASEO COMMUNITY DEVELOPMENT DISTRICT

The Board of Supervisors of the Paseo Community

Approved by Belinda Blandon Date 7/12/19
Date entered JUL 1 1 2019
001 GL 51300 OC 4801

*=Extend Expiration Date

CAPE CORAL BREEZE
PUBLISHED CAPE CORAL, FLA

Affidavit of Publication

State of Florida
County of Lee
Before the undersigned authority personally appeared Jay Hill, who on oath says that he/she is the ADVERTISING REPRESENTATIVE of the Cape Coral Breeze newspaper, published at Cape Coral, Lee County, Florida that the attached copy of advertisement, being a Legal Notice, in the matter of Notice of Public Meeting Paseo Community Development District, as published in said newspaper in the issues of July 3, 2019. Affiant further says that the Cape Coral Breeze is a newspaper published at Cape Coral, said Lee County, Florida and that the said newspaper has heretofore been continuously published in said Lee County, Florida, and has been entered as a second class periodicals matter at the post office in Fort Myers in said Lee County, Florida for a period of one year preceding the first publication of the attached copy of advertisement; and affiant further says that he has neither paid nor promised any person, firm or corporation any discount, rebate, commission or refund for the purpose of securing this advertisement for publication in the said Newspaper.

SWORN TO AND SUBSCRIBED before me this
July 3, 2019
Notary Public

114354

SUSAN M. DATO
Notary Public - State of Florida
Commission # GG 238164
My Comm. Expires Jan 21, 2023
Bonded through National Notary Assn.

NOTICE OF PUBLIC MEETING PASEO COMMUNITY DEVELOPMENT DISTRICT

The Board of Supervisors of the Paseo Community Development District ("District") will hold its regular meeting on Wednesday, July 17, 2019, at 11:00 a.m. at the Paseo Village Center - Theatre, located at 11611 Paseo Grande Boulevard, Fort Myers, Florida 33912. A copy of the agenda for the meeting can be obtained from the District Office at 9530 Marketplace Road, Suite 206, Fort Myers, Florida 33912 or by phone at (239) 936-0913. Additionally, a copy of the agenda, along with any meeting materials available in an electronic format, may be obtained at www.paseocdd.org. Items on the agenda may include, but are not limited to, District operations and maintenance activities, financial matters, capital improvements, and general administration activities.

The meeting is open to the public and will be conducted in accordance with the provisions of Florida law. There may be occasions when one or more Board Supervisors or staff members will participate by telephone. A speaker telephone will be present at the above location so that any Board Supervisor or staff member can attend the meeting by telephone and be fully informed of the discussions taking place either in person or by telephone communication. The meeting may be continued in progress without additional notice to a time, date, and location stated on the record.

Pursuant to provisions of the Americans with Disabilities Act, any person requiring special accommodations to participate in this meeting is asked to advise the District Office at (239) 936-0913, at least 48 hours before the meetings. If you are hearing or speech impaired, please contact the Florida Relay Service by dialing 7-1-1, or 1-800-955-8771 (TTY) / 1-800-955-8770 (Voice), for aid in contacting the District Office.

A person who decides to appeal any decision made by the Board with respect to any matter considered at the meeting is advised that the person will need a record of the proceedings and that, accordingly, the person may need to ensure that a verbatim record of the proceedings is made, including the testimony and evidence upon which the appeal is based.

Belinda Blandon
District Manager
Run Date: 07-3-19
114354

ALLIED UNIVERSAL™
There for you.

Eight Tower Bridge
161 Washington Street, Suite 600
Conshohocken, PA 19428
(866) 703-7666

Invoice Date
06/20/2019

Invoice Number
8958515

RECEIVED
JUN 25 2019

Belinda Bladon
Paseo Community Development District
9530 Marketplace Road
Fort Myers, FL 33912-0393

To ensure proper credit, please reference this invoice number on your remittance advice.

PLEASE REMIT PAYMENT TO:
Allied Universal Security Services
P.O. Box 828854
Philadelphia, PA 19182-8854

Total Amount Due:
(USD) $2,666.88

Terms:
Net 30 Days

Service Location: **153496** Customer: **153496** Billing Period: **06/14/2019 - 06/20/2019**
Paseo Community Development District
11611 Paseo Grande Blvd
Fort Myers, FL 33912-8988

Description	Quantity	UOM	Price	Amount
Security Professional-Regular	128.00	HR	15.21	1,946.88
Supervisor-Regular	40.00	HR	18.00	720.00
Total Hours	168.00			0.00
Subtotal				**2,666.88**
Sales Tax Subtotal				**0.00**
Total for - Paseo Community Development District				**2,666.88**

ate Rec'd Rizzetta & Co, Inc_____
D/M approval Belinda Blandon Date 6/28/19
Date entered JUN 27 2019
Fund 001 GL 52900 OC 4904
Check #_____

Subtotal	
	$2,666.88
Sales Tax	
	$0.00
Total Amount Due:	
(USD)	**$2,666.88**

ALLIED UNIVERSAL™
There for you.

Invoice Date
06/20/2019

Invoice Number
8958515

Invoice NO. 8958515 **Customer:** 153496 **Paseo Community Development District**

Description						Quantity	Bill Rate	Extension
Work Date	**Post Description**	**Employee Name**	**In Time**	**Out Time**	**Lunch**	**Hours**	**Hours Type**	
Security Professional-Regular						128.00	$15.21	$1,946.88
06/14/19	Security Professional	David Smith	0:00	7:00		7.00	Hourly-Regular	
06/14/19	Security Professional	Tony Chrysostome	15:00	23:00		8.00	Hourly-Regular	
06/14/19	Security Professional	David Smith	23:00	0:00		1.00	Hourly-Regular	
06/15/19	Security Professional	David Smith	0:00	7:00		7.00	Hourly-Regular	
06/15/19	Security Professional	Denise Gdowik	7:00	15:00		8.00	Hourly-Regular	
06/15/19	Security Professional	Tony Chrysostome	15:00	23:00		8.00	Hourly-Regular	
06/15/19	Security Professional	DeLena Smith	23:00	0:00		1.00	Hourly-Regular	
06/16/19	Security Professional	DeLena Smith	0:00	7:00		7.00	Hourly-Regular	
06/16/19	Security Professional	Denise Gdowik	7:00	15:00		8.00	Hourly-Regular	
06/16/19	Security Professional	Michael LaBelle	15:00	23:00		8.00	Hourly-Regular	
06/16/19	Security Professional	DeLena Smith	23:00	0:00		1.00	Hourly-Regular	
06/17/19	Security Professional	DeLena Smith	0:00	7:00		7.00	Hourly-Regular	
06/17/19	Security Professional	Denise Gdowik	15:00	23:00		8.00	Hourly-Regular	
06/17/19	Security Professional	DeLena Smith	23:00	0:00		1.00	Hourly-Regular	
06/18/19	Security Professional	DeLena Smith	0:00	7:00		7.00	Hourly-Regular	
06/18/19	Security Professional	Denise Gdowik	15:00	23:00		8.00	Hourly-Regular	
06/18/19	Security Professional	DeLena Smith	23:00	0:00		1.00	Hourly-Regular	
06/19/19	Security Professional	DeLena Smith	0:00	7:00		7.00	Hourly-Regular	
06/19/19	Security Professional	Denise Gdowik	15:00	23:00		8.00	Hourly-Regular	
06/19/19	Security Professional	DeLena Smith	23:00	0:00		1.00	Hourly-Regular	
06/20/19	Security Professional	DeLena Smith	0:00	7:00		7.00	Hourly-Regular	
06/20/19	Security Professional	Tony Chrysostome	15:00	23:00		8.00	Hourly-Regular	
06/20/19	Security Professional	David Smith	23:00	0:00		1.00	Hourly-Regular	
Supervisor-Regular						40.00	$18.00	$720.00
06/14/19	Security Professional	Jacqueline Hudson	7:00	15:00		8.00	Hourly-Regular	
06/17/19	Security Professional	Jacqueline Hudson	7:00	15:00		8.00	Hourly-Regular	
06/18/19	Security Professional	Jacqueline Hudson	7:00	15:00		8.00	Hourly-Regular	
06/19/19	Security Professional	Jacqueline Hudson	7:00	15:00		8.00	Hourly-Regular	
06/20/19	Security Professional	Jacqueline Hudson	7:00	15:00		8.00	Hourly-Regular	
Total Hours						168.00		$0.00

Revenue Total	**$2,666.88**
Tax Total	**$0.00**
Grand Total	**$2,666.88**

ALLIED UNIVERSAL™
There for you.

Eight Tower Bridge
161 Washington Street, Suite 600
Conshohocken, PA 19428
(866) 703-7666

Invoice Date
06/27/2019

Invoice Number
8976314

RECEIVED
JUL 09 2019

To ensure proper credit, please reference this invoice number on your remittance advice.

PLEASE REMIT PAYMENT TO:
Allied Universal Security Services
P.O. Box 828854
Philadelphia, PA 19182-8854

Total Amount Due:
(USD) $2,666.88

Terms:
Net 30 Days

Belinda Bladon
Paseo Community Development District
9530 Marketplace Road
Fort Myers, FL 33912-0393

Service Location: **153496** Customer: **153496** Billing Period: **06/21/2019 - 06/27/2019**

Paseo Community Development District
11611 Paseo Grande Blvd
Fort Myers, FL 33912-8988

Description	Quantity	UOM	Price	Amount
Security Professional-Regular	128.00	HR	15.21	1,946.88
Supervisor-Regular	40.00	HR	18.00	720.00
Total Hours	168.00			0.00
Subtotal				**2,666.88**
Sales Tax Subtotal				**0.00**
Total for - Paseo Community Development District				**2,666.88**

Rec'd Rizzetta & Co, Inc
M approval Belinda Blandon Date 7/12/19
Date entered JUL 11 2019
Fund 001 GL 52900 OC 4904
Check #

Subtotal	
	$2,666.88
Sales Tax	
	$0.00
Total Amount Due:	
(USD)	**$2,666.88**

ALLIED UNIVERSAL
There for you.

Invoice Date
06/27/2019

Invoice Number
8976314

Invoice NO. 8976314 **Customer:** 153496 **Paseo Community Development District**

Description						Quantity	Bill Rate	Extension
Work Date	**Post Description**	**Employee Name**	**In Time**	**Out Time**	**Lunch**	**Hours**	**Hours Type**	
Security Professional-Regular						128.00	$15.21	$1,946.88
06/21/19	Security Professional	David Smith	0:00	7:00		7.00	Hourly-Regular	
06/21/19	Security Professional	Tony Chrysostome	15:00	23:00		8.00	Hourly-Regular	
06/21/19	Security Professional	David Smith	23:00	0:00		1.00	Hourly-Regular	
06/22/19	Security Professional	David Smith	0:00	7:00		7.00	Hourly-Regular	
06/22/19	Security Professional	Denise Gdowik	7:00	15:00		8.00	Hourly-Regular	
06/22/19	Security Professional	Tony Chrysostome	15:00	23:00		8.00	Hourly-Regular	
06/22/19	Security Professional	DeLena Smith	23:00	0:00		1.00	Hourly-Regular	
06/23/19	Security Professional	DeLena Smith	0:00	7:00		7.00	Hourly-Regular	
06/23/19	Security Professional	Denise Gdowik	7:00	15:00		8.00	Hourly-Regular	
06/23/19	Security Professional	Michael LaBelle	15:00	23:00		8.00	Hourly-Regular	
06/23/19	Security Professional	DeLena Smith	23:00	0:00		1.00	Hourly-Regular	
06/24/19	Security Professional	DeLena Smith	0:00	7:00		7.00	Hourly-Regular	
06/24/19	Security Professional	Denise Gdowik	15:00	23:00		8.00	Hourly-Regular	
06/24/19	Security Professional	DeLena Smith	23:00	0:00		1.00	Hourly-Regular	
06/25/19	Security Professional	DeLena Smith	0:00	7:00		7.00	Hourly-Regular	
06/25/19	Security Professional	Denise Gdowik	15:00	23:00		8.00	Hourly-Regular	
06/25/19	Security Professional	DeLena Smith	23:00	0:00		1.00	Hourly-Regular	
06/26/19	Security Professional	DeLena Smith	0:00	7:00		7.00	Hourly-Regular	
06/26/19	Security Professional	Denise Gdowik	15:00	23:00		8.00	Hourly-Regular	
06/26/19	Security Professional	DeLena Smith	23:00	0:00		1.00	Hourly-Regular	
06/27/19	Security Professional	DeLena Smith	0:00	7:00		7.00	Hourly-Regular	
06/27/19	Security Professional	Tony Chrysostome	15:00	23:00		8.00	Hourly-Regular	
06/27/19	Security Professional	David Smith	23:00	0:00		1.00	Hourly-Regular	
Supervisor-Regular						40.00	$18.00	$720.00
06/21/19	Security Professional	Jacqueline Hudson	7:00	15:00		8.00	Hourly-Regular	
06/24/19	Security Professional	Jacqueline Hudson	7:00	15:00		8.00	Hourly-Regular	
06/25/19	Security Professional	Jacqueline Hudson	7:00	15:00		8.00	Hourly-Regular	
06/26/19	Security Professional	Jacqueline Hudson	7:00	15:00		8.00	Hourly-Regular	
06/27/19	Security Professional	Jacqueline Hudson	7:00	15:00		8.00	Hourly-Regular	
Total Hours						168.00		$0.00

Revenue Total	**$2,666.88**
Tax Total	**$0.00**
Grand Total	**$2,666.88**

ALLIED UNIVERSAL™
There for you.

Eight Tower Bridge
161 Washington Street, Suite 600
Conshohocken, PA 19428
(866) 703-7666

Invoice Date
07/04/2019

Invoice Number
9005457

RECEIVED
JUL 09 2019

To ensure proper credit, please reference this invoice number on your remittance advice.

PLEASE REMIT PAYMENT TO:
Allied Universal Security Services
P.O. Box 828854
Philadelphia, PA 19182-8854

Belinda Bladon
Paseo Community Development District
9530 Marketplace Road
Fort Myers, FL 33912-0393

Total Amount Due:
(USD) $2,860.64

Terms:
Net 30 Days

Service Location: **153496** Customer: **153496** Billing Period: **06/28/2019 - 07/04/2019**
Paseo Community Development District
11611 Paseo Grande Blvd
Fort Myers, FL 33912-8988

Description	Quantity	UOM	Price	Amount
Security Professional-Regular	112.00	HR	15.21	1,703.52
Security Professional-Holiday	16.00	HR	22.82	365.12
Supervisor-Regular	32.00	HR	18.00	576.00
Supervisor-Overtime	8.00	HR	27.00	216.00
Total Hours	168.00			0.00
Subtotal				**2,860.64**
Sales Tax Subtotal				**0.00**
Total for - Paseo Community Development District				**2,860.64**

Date Rec'd Rizzetta & Co, Inc_____
D/M approval Belinda Blandon Date 7/12/19
Date entered JUL 11 2019
Fund 001 GL 52900 OC 4904
Check #_____

Subtotal	
	$2,860.64
Sales Tax	
	$0.00
Total Amount Due:	
(USD)	**$2,860.64**

ALLIED UNIVERSAL
There for you.

Invoice Date
07/04/2019

Invoice Number
9005457

Invoice NO. 9005457 **Customer:** 153496 **Paseo Community Development District**

Description

Work Date	Post Description	Employee Name	In Time	Out Time	Lunch	Hours	Quantity	Bill Rate / Hours Type	Extension
Security Professional-Regular							112.00	$15.21	$1,703.52
06/28/19	Security Professional	David Smith	0:00	7:00		7.00		Hourly-Regular	
06/28/19	Security Professional	Nicholas Valenza	15:00	23:00		8.00		Hourly-Regular	
06/28/19	Security Professional	David Smith	23:00	0:00		1.00		Hourly-Regular	
06/29/19	Security Professional	David Smith	0:00	7:00		7.00		Hourly-Regular	
06/29/19	Security Professional	William neal	7:00	15:00		8.00		Hourly-Regular	
06/29/19	Security Professional	Nicholas Valenza	15:00	23:00		8.00		Hourly-Regular	
06/29/19	Security Professional	DeLena Smith	23:00	0:00		1.00		Hourly-Regular	
06/30/19	Security Professional	DeLena Smith	0:00	7:00		7.00		Hourly-Regular	
06/30/19	Security Professional	William neal	7:00	15:00		8.00		Hourly-Regular	
06/30/19	Security Professional	Nicholas Valenza	15:00	23:00		8.00		Hourly-Regular	
06/30/19	Security Professional	DeLena Smith	23:00	0:00		1.00		Hourly-Regular	
07/01/19	Security Professional	DeLena Smith	0:00	7:00		7.00		Hourly-Regular	
07/01/19	Security Professional	Denise Gdowik	15:00	23:00		8.00		Hourly-Regular	
07/01/19	Security Professional	DeLena Smith	23:00	0:00		1.00		Hourly-Regular	
07/02/19	Security Professional	DeLena Smith	0:00	7:00		7.00		Hourly-Regular	
07/02/19	Security Professional	Denise Gdowik	15:00	23:00		8.00		Hourly-Regular	
07/02/19	Security Professional	DeLena Smith	23:00	0:00		1.00		Hourly-Regular	
07/03/19	Security Professional	DeLena Smith	0:00	7:00		7.00		Hourly-Regular	
07/03/19	Security Professional	Denise Gdowik	15:00	23:00		8.00		Hourly-Regular	
07/03/19	Security Professional	DeLena Smith	23:00	0:00		1.00		Hourly-Regular	
Security Professional-Holiday							16.00	$22.82	$365.12
07/04/19	Security Professional	DeLena Smith	0:00	7:00		7.00		Hourly-Hol Worked 1.5	
07/04/19	Security Professional	Tony Chrysostome	15:00	23:00		8.00		Hourly-Hol Worked 1.5	
07/04/19	Security Professional	David Smith	23:00	0:00		1.00		Hourly-Hol Worked 1.5	
Supervisor-Regular							32.00	$18.00	$576.00
06/28/19	Security Professional	Jacqueline Hudson	7:00	15:00		8.00		Hourly-Regular	
07/01/19	Security Professional	Jacqueline Hudson	7:00	15:00		8.00		Hourly-Regular	
07/02/19	Security Professional	Jacqueline Hudson	7:00	15:00		8.00		Hourly-Regular	
07/03/19	Security Professional	Jacqueline Hudson	7:00	15:00		8.00		Hourly-Regular	
Supervisor-Overtime							8.00	$27.00	$216.00
07/04/19	Security Professional	Jacqueline Hudson	7:00	15:00		8.00		Hourly-Hol Worked 1.5	
Total Hours							168.00		$0.00

Revenue Total	**$2,860.64**
Tax Total	**$0.00**
Grand Total	**$2,860.64**

ALLIED UNIVERSAL
There for you.

Eight Tower Bridge
161 Washington Street, Suite 600
Conshohocken, PA 19428
(866) 703-7666

Invoice Date
07/11/2019

Invoice Number
9033078

RECEIVED
JUL 16 2019

Belinda Bladon
Paseo Community Development District
9530 Marketplace Road
Fort Myers, FL 33912-0393

To ensure proper credit, please reference this invoice number on your remittance advice.

PLEASE REMIT PAYMENT TO:
Allied Universal Security Services
P.O. Box 828854
Philadelphia, PA 19182-8854

Total Amount Due:
(USD) $2,666.88

Terms:
Net 30 Days

Service Location: **153496** Customer: **153496** Billing Period: **07/05/2019 - 07/11/2019**
Paseo Community Development District
11611 Paseo Grande Blvd
Fort Myers, FL 33912-8988

Description	Quantity	UOM	Price	Amount
Security Professional-Regular	128.00	HR	15.21	1,946.88
Supervisor-Regular	40.00	HR	18.00	720.00
Total Hours	168.00			0.00
Subtotal				**2,666.88**
Sales Tax Subtotal				**0.00**
Total for - Paseo Community Development District				**2,666.88**

Date Rec'd Rizzetta & Co, Inc_____
D/M approval Belinda Blandon Date 7/19/19
Date entered JUL 17 2019
Fund 001 GL 52900 OC 4904
Check #_____

Subtotal	
	$2,666.88
Sales Tax	
	$0.00
Total Amount Due:	
(USD)	**$2,666.88**

ALLIED UNIVERSAL
There for you.

Invoice Date
07/11/2019

Invoice Number
9033078

Invoice NO. 9033078 **Customer:** 153496 **Paseo Community Development District**

Description						Quantity	Bill Rate	Extension
Work Date	**Post Description**	**Employee Name**	**In Time**	**Out Time**	**Lunch**	**Hours**	**Hours Type**	
Security Professional-Regular						128.00	$15.21	$1,946.88
07/05/19	Security Professional	David Smith	0:00	7:00		7.00	Hourly-Regular	
07/05/19	Security Professional	Tony Chrysostome	15:00	23:00		8.00	Hourly-Regular	
07/05/19	Security Professional	David Smith	23:00	0:00		1.00	Hourly-Regular	
07/06/19	Security Professional	David Smith	0:00	7:00		7.00	Hourly-Regular	
07/06/19	Security Professional	Denise Gdowik	7:00	15:00		8.00	Hourly-Regular	
07/06/19	Security Professional	Tony Chrysostome	15:00	23:00		8.00	Hourly-Regular	
07/06/19	Security Professional	DeLena Smith	23:00	0:00		1.00	Hourly-Regular	
07/07/19	Security Professional	DeLena Smith	0:00	7:00		7.00	Hourly-Regular	
07/07/19	Security Professional	Denise Gdowik	7:00	15:00		8.00	Hourly-Regular	
07/07/19	Security Professional	Michael LaBelle	15:00	23:00		8.00	Hourly-Regular	
07/07/19	Security Professional	DeLena Smith	23:00	0:00		1.00	Hourly-Regular	
07/08/19	Security Professional	DeLena Smith	0:00	7:00		7.00	Hourly-Regular	
07/08/19	Security Professional	Denise Gdowik	15:00	23:00		8.00	Hourly-Regular	
07/08/19	Security Professional	DeLena Smith	23:00	0:00		1.00	Hourly-Regular	
07/09/19	Security Professional	DeLena Smith	0:00	7:00		7.00	Hourly-Regular	
07/09/19	Security Professional	Denise Gdowik	15:00	23:00		8.00	Hourly-Regular	
07/09/19	Security Professional	DeLena Smith	23:00	0:00		1.00	Hourly-Regular	
07/10/19	Security Professional	DeLena Smith	0:00	7:00		7.00	Hourly-Regular	
07/10/19	Security Professional	Denise Gdowik	15:00	23:00		8.00	Hourly-Regular	
07/10/19	Security Professional	DeLena Smith	23:00	0:00		1.00	Hourly-Regular	
07/11/19	Security Professional	DeLena Smith	0:00	7:00		7.00	Hourly-Regular	
07/11/19	Security Professional	Tony Chrysostome	15:00	23:00		8.00	Hourly-Regular	
07/11/19	Security Professional	David Smith	23:00	0:00		1.00	Hourly-Regular	
Supervisor-Regular						40.00	$18.00	$720.00
07/05/19	Security Professional	Jacqueline Hudson	7:00	15:00		8.00	Hourly-Regular	
07/08/19	Security Professional	Nicholas Valenza	7:00	15:00		8.00	Hourly-Regular	
07/09/19	Security Professional	Jacqueline Hudson	7:00	15:00		8.00	Hourly-Regular	
07/10/19	Security Professional	Jacqueline Hudson	7:00	15:00		8.00	Hourly-Regular	
07/11/19	Security Professional	Jacqueline Hudson	7:00	15:00		8.00	Hourly-Regular	
Total Hours						168.00		$0.00

Revenue Total	**$2,666.88**
Tax Total	**$0.00**
Grand Total	**$2,666.88**

ALLIED UNIVERSAL
There for you.

Eight Tower Bridge
161 Washington Street, Suite 600
Conshohocken, PA 19428
(866) 703-7666

Invoice Date
07/18/2019

Invoice Number
9053624

RECEIVED
JUL 2 3 2019

To ensure proper credit, please reference this invoice number on your remittance advice.

PLEASE REMIT PAYMENT TO:
Allied Universal Security Services
P.O. Box 828854
Philadelphia, PA 19182-8854

Total Amount Due:
(USD) $2,666.88

Terms:
Net 30 Days

Belinda Bladon
Paseo Community Development District
9530 Marketplace Road
Fort Myers, FL 33912-0393

Service Location: **153496** Customer: **153496** Billing Period: **07/12/2019 - 07/18/2019**
Paseo Community Development District
11611 Paseo Grande Blvd
Fort Myers, FL 33912-8988

Description	Quantity	UOM	Price	Amount
Security Professional-Regular	128.00	HR	15.21	1,946.88
Supervisor-Regular	40.00	HR	18.00	720.00
Total Hours	168.00			0.00
Subtotal				**2,666.88**
Sales Tax Subtotal				**0.00**
Total for - Paseo Community Development District				**2,666.88**

Date Rec'd Rizzetta & Co, Inc_____
D/M approval Belinda Blandon Date 7/29/19
Date entered JUL 2 6 2019
Fund 001 GL 52900 OC 4904
Check #_____

Subtotal	
	$2,666.88
Sales Tax	
	$0.00
Total Amount Due:	
(USD)	**$2,666.88**

ALLIED UNIVERSAL
There for you.

Invoice Date
07/18/2019

Invoice Number
9053624

Invoice NO. 9053624 **Customer:** 153496 **Paseo Community Development District**

Description						Quantity	Bill Rate	Extension
Work Date	**Post Description**	**Employee Name**	**In Time**	**Out Time**	**Lunch**	**Hours**	**Hours Type**	
Security Professional-Regular						128.00	$15.21	$1,946.88
07/12/19	Security Professional	David Smith	0:00	7:00		7.00	Hourly-Regular	
07/12/19	Security Professional	Tony Chrysostome	15:00	23:00		8.00	Hourly-Regular	
07/12/19	Security Professional	David Smith	23:00	0:00		1.00	Hourly-Regular	
07/13/19	Security Professional	David Smith	0:00	7:00		7.00	Hourly-Regular	
07/13/19	Security Professional	Denise Gdowik	7:00	15:00		8.00	Hourly-Regular	
07/13/19	Security Professional	Tony Chrysostome	15:00	23:00		8.00	Hourly-Regular	
07/13/19	Security Professional	DeLena Smith	23:00	0:00		1.00	Hourly-Regular	
07/14/19	Security Professional	DeLena Smith	0:00	7:00		7.00	Hourly-Regular	
07/14/19	Security Professional	Denise Gdowik	7:00	15:00		8.00	Hourly-Regular	
07/14/19	Security Professional	Michael LaBelle	15:00	23:00		8.00	Hourly-Regular	
07/14/19	Security Professional	DeLena Smith	23:00	0:00		1.00	Hourly-Regular	
07/15/19	Security Professional	DeLena Smith	0:00	7:00		7.00	Hourly-Regular	
07/15/19	Security Professional	Denise Gdowik	15:00	23:00		8.00	Hourly-Regular	
07/15/19	Security Professional	DeLena Smith	23:00	0:00		1.00	Hourly-Regular	
07/16/19	Security Professional	DeLena Smith	0:00	7:00		7.00	Hourly-Regular	
07/16/19	Security Professional	Denise Gdowik	15:00	23:00		8.00	Hourly-Regular	
07/16/19	Security Professional	DeLena Smith	23:00	0:00		1.00	Hourly-Regular	
07/17/19	Security Professional	DeLena Smith	0:00	7:00		7.00	Hourly-Regular	
07/17/19	Security Professional	Denise Gdowik	15:00	23:00		8.00	Hourly-Regular	
07/17/19	Security Professional	DeLena Smith	23:00	0:00		1.00	Hourly-Regular	
07/18/19	Security Professional	DeLena Smith	0:00	7:00		7.00	Hourly-Regular	
07/18/19	Security Professional	Tony Chrysostome	15:00	23:00		8.00	Hourly-Regular	
07/18/19	Security Professional	David Smith	23:00	0:00		1.00	Hourly-Regular	
Supervisor-Regular						40.00	$18.00	$720.00
07/12/19	Security Professional	Jacqueline Hudson	7:00	15:00		8.00	Hourly-Regular	
07/15/19	Security Professional	Jacqueline Hudson	7:00	15:00		8.00	Hourly-Regular	
07/16/19	Security Professional	Jacqueline Hudson	7:00	15:00		8.00	Hourly-Regular	
07/17/19	Security Professional	Jacqueline Hudson	7:00	15:00		8.00	Hourly-Regular	
07/18/19	Security Professional	Jacqueline Hudson	7:00	15:00		8.00	Hourly-Regular	
Total Hours						168.00		$0.00

Revenue Total	**$2,666.88**
Tax Total	**$0.00**
Grand Total	**$2,666.88**

Vertex Water Features
Lake Aeration Systems & Floating Fountains

RECEIVED
JUL 01 2019

Vertex Water Features, Inc.
2100 NW 33rd Street
Pompano Beach, FL 33069

Phone: (844) 432-4303
raquel.mason@vertexwaterfeatures.com
www.vertexwaterfeatures.com

Bill to
Paseo CDD 0493280
c/o Rizetta & Company
12750 Citrus Park Lane #115
Tampa FL 33625

Transaction Date: 6/28/2019

Terms: Net 30

Invoice I5530

Manufacturer	Model	Name
Unknown	30Hp Shoremount Sign	Sign
Horvath	7.5HP TriTier	Site #1
Horvath	5Hp TriTier	Site #10
Horvath	5Hp TriTier	Site #11
Horvath	5Hp TriTier	Site #12
Horvath	7.5HP TriTier	Site #13
Horvath	7.5HP TriTier	Site #14
Horvath	7.5HP TriTier	Site #15
Horvath	7.5HP TriTier	Site #16
Horvath	5Hp TriTier	Site #17
Horvath	7.5HP TriTier	Site #18
Horvath	5Hp TriTier	Site #19
Horvath	5Hp TriTier	Site #2
Horvath	5Hp TriTier	Site #20
Horvath	5Hp TriTier	Site #3
Horvath	5Hp TriTier	Site #4
Horvath	5Hp TriTier	Site #5
Horvath	7.5HP TriTier	Site #6
Horvath	7.5HP TriTier	Site #7
Horvath	7.5HP TriTier	Site #8
Horvath	7.5HP TriTier	Site #9

Vertex Water Features, Inc.
2100 NW 33rd Street
Pompano Beach, FL 33069

Phone: (844) 432-4303
raquel.mason@vertexwaterfeatures.com
www.vertexwaterfeatures.com

Description
Fountain Cleaning Agreement

Subtotal:	$1,325.00
Tax:	$0.00
Total:	$1,325.00

Date Rec'd Rizzetta & Co, Inc._____
D/M approval Belinda Blandon Date 7/3/19
Date entered JUL 0 2 2019
Fund 001 GL 53900 OC 4601
Check #_____

Vertex Water Features
Lake Aeration Systems & Floating Fountains

Vertex Water Features, Inc.
2100 NW 33rd Street
Pompano Beach, FL 33069

Phone: (844) 432-4303
raquel.mason@vertexwaterfeatures.com
www.vertexwaterfeatures.com

Bill to
Paseo CDD 0493280
c/o Rizetta & Company
12750 Citrus Park Lane #115
Tampa FL 33625

Ship to
Belinda Blandon
Paseo CDD 0493280
Palomino Lane & Penzance Blvd.
Ft. Myers FL 33912

Work Order #: 6787

Assigned Tech: Oscar M. (OM)

Completion Date: 6/28/2019

Equipment Type: Floating Fountain

Name: Site #1

Manufacturer: Horvath

Model: 7.5HP TriTier

Install Date:

Parts Warranty Expiration:

Labor Warranty Expiration:

Service Comments

1. Cleaned moderate algae from components.

2. All circuits normal at departure.

3.

Services Performed

4.

- ☑ Test Motor GFCI circuit
- ☑ Test Light GFCI circuit
- ☑ Clean Intake Screen
- ☑ Clean Light & Lenses
- ☑ Clean Float
- ☑ Clean Display Head/Ring & Jets
- ☑ Adjust Mooring Lines
- ☑ Reset Timers

Readings

Vertex Water Features
Lake Aeration Systems & Floating Fountains

Vertex Water Features, Inc.
2100 NW 33rd Street
Pompano Beach, FL 33069

Phone: (844) 432-4303
raquel.mason@vertexwaterfeatures.com
www.vertexwaterfeatures.com

5. Motor Voltage	490	6. Motor Amperage / Leakage	9.1amps
7. Lighting Voltage	123	8. Lighting Amperage / Leakage	21amps
9. Timer Settings	Pump 7am to 11pm. Lights on photo lens		

Customer Contact Method

10.

- ☑ Call Ahead
- ☑ On Site Contact

Vertex Water Features
Lake Aeration Systems & Floating Fountains

Vertex Water Features, Inc.
2100 NW 33rd Street
Pompano Beach, FL 33069

Phone: (844) 432-4303
raquel.mason@vertexwaterfeatures.com
www.vertexwaterfeatures.com

RECEIVED
JUL 01 2019

Bill to
Paseo CDD 0493280
c/o Rizetta & Company
12750 Citrus Park Lane #115
Tampa FL 33625

Transaction Date: 6/28/2019

Terms: Net 30

Invoice I5531

Description
Fountain Repair- Additional parts used during Fountain Cleaning. Site #12 - Replaced bad photo lens with new one. Site #3 - Replaced bad light fixture gasket. Replaced bad light socket. Replaced bad light bulb. Replaced 2 bad run capacitors with new ones.

Subtotal:	$357.12
Tax:	$0.00
Total:	$357.12

Date Rec'd Rizzetta & Co, Inc_____
O/M approval Belinda Blandon Date 7/3/19
Date entered JUL 02 2019
Fund 001 GL 53800 OC 4598
Check #_____

Vertex Water Features
Lake Aeration Systems & Floating Fountains

Vertex Water Features, Inc.
2100 NW 33rd Street
Pompano Beach, FL 33069

Phone: (844) 432-4303
raquel.mason@vertexwaterfeatures.com
www.vertexwaterfeatures.com

RECEIVED
JUL 0 1 2019

Bill to
Paseo CDD 0493280
c/o Rizetta & Company
12750 Citrus Park Lane #115
Tampa FL 33625

Transaction Date: 6/28/2019

Terms: Net 30

Invoice I5532

Manufacturer	Model	Name
Unknown	(5) 3Hp Pool Pumps	Guardhouse
Unknown	30Hp Shoremount Sign	Sign

Description
Fountain Cleaning Agreement

Subtotal:	$460.00
Tax:	$0.00
Total:	$460.00

ate Rec'd Rizzetta & Co, Inc_____
D/M approval Belinda Blandon Date 7/3/19
Date entered JUL 0 2 2019
Fund 001 GL 53800 OC 4599
Check #_____

Vertex Water Features
Lake Aeration Systems & Floating Fountains

Vertex Water Features, Inc.
2100 NW 33rd Street
Pompano Beach, FL 33069

Phone: (844) 432-4303
raquel.mason@vertexwaterfeatures.com
www.vertexwaterfeatures.com

Bill to
Paseo CDD 0493280
c/o Rizetta & Company
12750 Citrus Park Lane #115
Tampa FL 33625

Ship to
Belinda Blandon
Paseo CDD 0493280
Palomino Lane & Penzance Blvd.
Ft. Myers FL 33912

Work Order #: 6988

Assigned Tech: Oscar M. (OM)

Completion Date: 6/28/2019

Equipment Type: Architectural Water Feature

Name: Guardhouse

Manufacturer: Unknown

Model: (5) 3Hp Pool Pumps

Install Date:

Parts Warranty Expiration:

Labor Warranty Expiration:

Service Comments

1. Cleaned moderate algae from components.

2. All circuits normal at departure.

3.

Services Performed

4.

- ☑ Test Motor GFCI circuit
- ☑ Test Light GFCI circuit
- ☑ Clean Intake Screen
- ☑ Clean Light & Lenses
- ☑ Clean Float
- ☑ Clean Display Head/Ring & Jets
- ☑ Adjust Mooring Lines
- ☑ Reset Timers

Readings